Dist	COUNTY	ROUTE	POST MILES TOTAL PROJECT	SHEET No.	TOTAL SHEETS
10	SJ	99	0.0/5.7	1	116

STATE OF CALIFORNIA

DEPARTMENT OF TRANSPORTATION

ACNHP-P099(602)E

PROJECT PLANS FOR CONSTRUCTION ON

STATE HIGHWAY

IN SAN JOAQUIN COUNTY
IN AND NEAR RIPON
FROM STANISLAUS COUNTY LINE
TO 0.2 MILE SOUTH OF ROUTE 120 SEPARATION

TO BE SUPPLEMENTED BY STANDARD PLANS DATED 2010

INDEX OF PLANS

SHEET No.	DESCRIPTION
1	TITLE
2-5	TYPICAL CROSS SECTIONS
6-27	CONSTRUCTION DETAILS
28-32	DRAINAGE PLANS, PROFILE, DETAILS, AND QUANTITIES
33-34	UTILITY PLAN
35	CONSTRUCTION AREA SIGNS
36-44	MOTORIST INFORMATION PLANS, SIGN DETAILS, AND QUANTITIES
45-48	TRAFFIC HANDLING PLANS AND QUANTITIES
49-50	PAVEMENT DELINEATION QUANTITIES
51-53	SUMMARY OF QUANTITIES
54	LEGEND, ABBREVIATIONS AND SYMBOLS
55-62	ELECTRICAL PLANS AND QUANTITIES
63-116	REVISED STANDARD PLANS

THE STANDARD PLANS LIST APPLICABLE TO THIS CONTRACT IS INCLUDED IN THE NOTICE TO BIDDERS AND SPECIAL PROVISIONS BOOK.

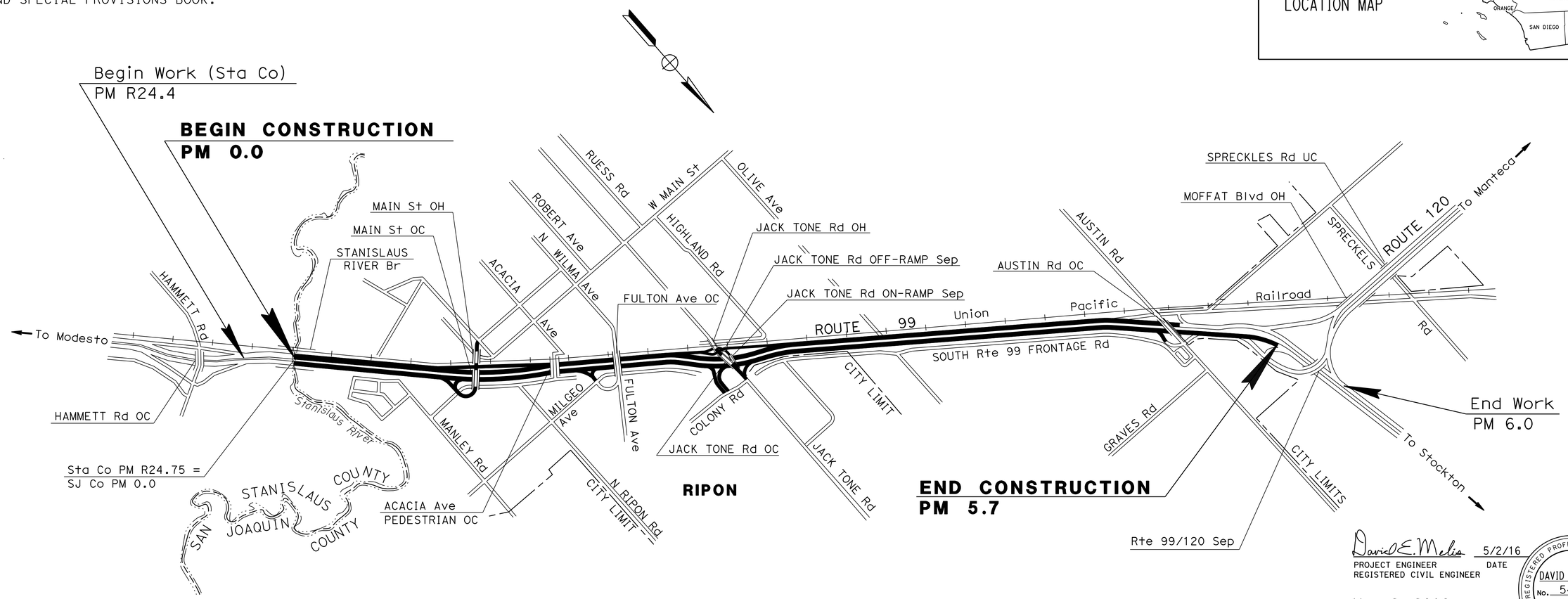

NO SCALE

THE CONTRACTOR SHALL POSSESS THE CLASS (OR CLASSES) OF LICENSE AS SPECIFIED IN THE "NOTICE TO BIDDERS."

David E. Melis 5/2/16
PROJECT ENGINEER DATE
REGISTERED CIVIL ENGINEER

May 2, 2016
PLANS APPROVAL DATE

REGISTERED PROFESSIONAL ENGINEER
DAVID E MELIS
No. 54383
Exp. 12/31/2017
CIVIL
STATE OF CALIFORNIA

THE STATE OF CALIFORNIA OR ITS OFFICERS OR AGENTS SHALL NOT BE RESPONSIBLE FOR THE ACCURACY OR COMPLETENESS OF SCANNED COPIES OF THIS PLAN SHEET.

PROJECT MANAGER SINARATH PHENG
DESIGN MANAGER CAROLINE REYES

CONTRACT No.	10-0Q1604
PROJECT ID	1013000255

LAST REVISION 07-15-16
DATE PLOTTED => 29-JUL-2016
TIME PLOTTED => 10:56

Dist	COUNTY	ROUTE	POST MILES TOTAL PROJECT	SHEET No.	TOTAL SHEETS
10	SJ	99	0.0/5.7	2	116

David E. Melis 5/2/16
REGISTERED CIVIL ENGINEER DATE

5-2-16
PLANS APPROVAL DATE

REGISTERED PROFESSIONAL ENGINEER
DAVID E MELIS
No. 54383
Exp. 12/31/2017
CIVIL
STATE OF CALIFORNIA

THE STATE OF CALIFORNIA OR ITS OFFICERS OR AGENTS SHALL NOT BE RESPONSIBLE FOR THE ACCURACY OR COMPLETENESS OF SCANNED COPIES OF THIS PLAN SHEET.

NOTES:

1. DIMENSIONS OF THE PAVEMENT STRUCTURES (STRUCTURAL SECTIONS) ARE SUBJECT TO TOLERANCES SPECIFIED IN THE STANDARD SPECIFICATIONS.
2. FOR ACCURATE RIGHT OF WAY DATA, CONTACT RIGHT OF WAY ENGINEERING AT THE DISTRICT OFFICE.
3. FOR COLD PLANE AC PAVEMENT DIMENSIONS AND LOCATIONS, SEE SUMMARY OF QUANTITIES SHEET.
4. FOR RUMBLE STRIP LOCATIONS, SEE SUMMARY OF QUANTITIES SHEET.
5. SEE CONSTRUCTION DETAILS FOR MAINTAINING VERTICAL CLEARANCE REQUIREMENTS UNDER EXISTING OVERCROSSING STRUCTURES.

ABBREVIATIONS:

RHMA-G - RUBBERIZED HOT MIX ASPHALT (GAP GRADED)
HFST - HIGH FRICTION SURFACE TREATMENT

PAVEMENT CLIMATE REGION

INLAND VALLEY

STRUCTURAL SECTION NOTES:

1 — 0.20' RHMA-G

2 — 0.25' COLD PLANE AC Pvmt
0.25' HMA (TYPE A)

3 — 0.15' RHMA-G

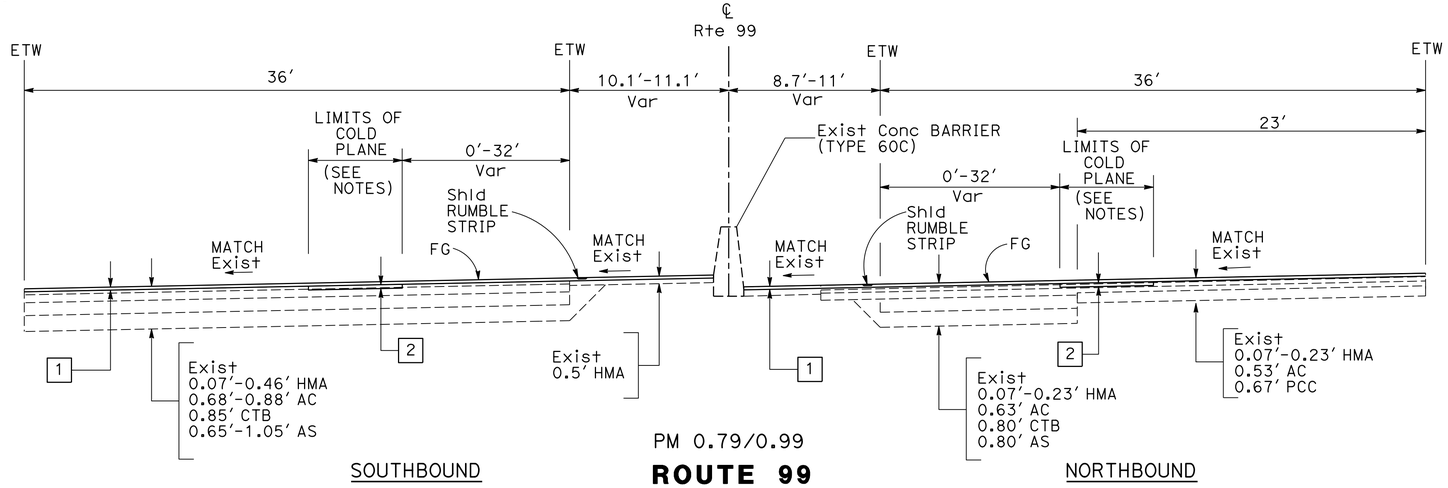

PM 0.79/0.99
ROUTE 99

SOUTHBOUND NORTHBOUND

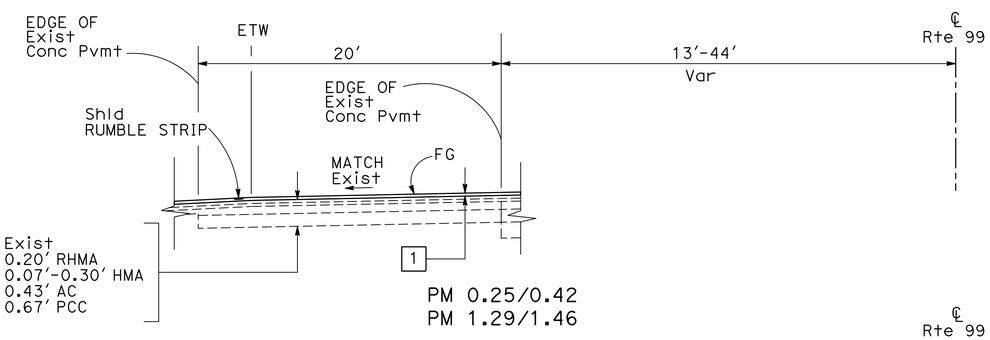

PM 0.25/0.42
PM 1.29/1.46

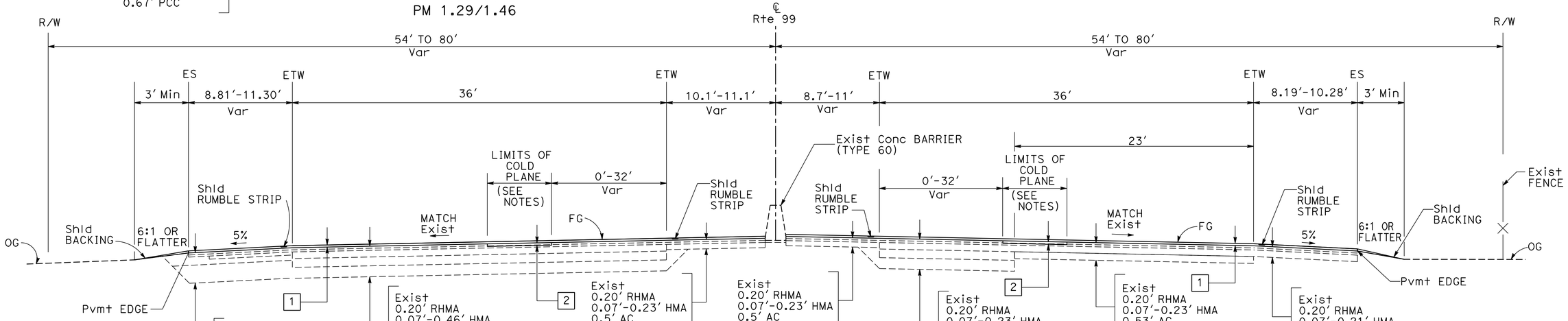

PM 0.20/0.79
PM 0.99/1.69
ROUTE 99

SOUTHBOUND NORTHBOUND

TYPICAL CROSS SECTIONS
NO SCALE
X-1

DM	04-11-16	CALCULATED-DESIGNED BY	
HR	02-12-16	CHECKED BY	
REVISED BY	DATE REVISED	FUNCTIONAL SUPERVISOR	CAROLINE REYES
RAY CHANG	DAVID MELIS		

STATE OF CALIFORNIA - DEPARTMENT OF TRANSPORTATION
Caltrans
DESIGN

LAST REVISION 06-30-16
DATE PLOTTED => 25-JUL-2016
TIME PLOTTED => 15:13

Dist	COUNTY	ROUTE	POST MILES TOTAL PROJECT	SHEET No.	TOTAL SHEETS
10	SJ	99	0.0/5.7	3	116

David E. Melis 5/2/16
REGISTERED CIVIL ENGINEER DATE

5-2-16
PLANS APPROVAL DATE

REGISTERED PROFESSIONAL ENGINEER
DAVID E MELIS
No. 54383
Exp. 12/31/2017
CIVIL
STATE OF CALIFORNIA

THE STATE OF CALIFORNIA OR ITS OFFICERS OR AGENTS SHALL NOT BE RESPONSIBLE FOR THE ACCURACY OR COMPLETENESS OF SCANNED COPIES OF THIS PLAN SHEET.

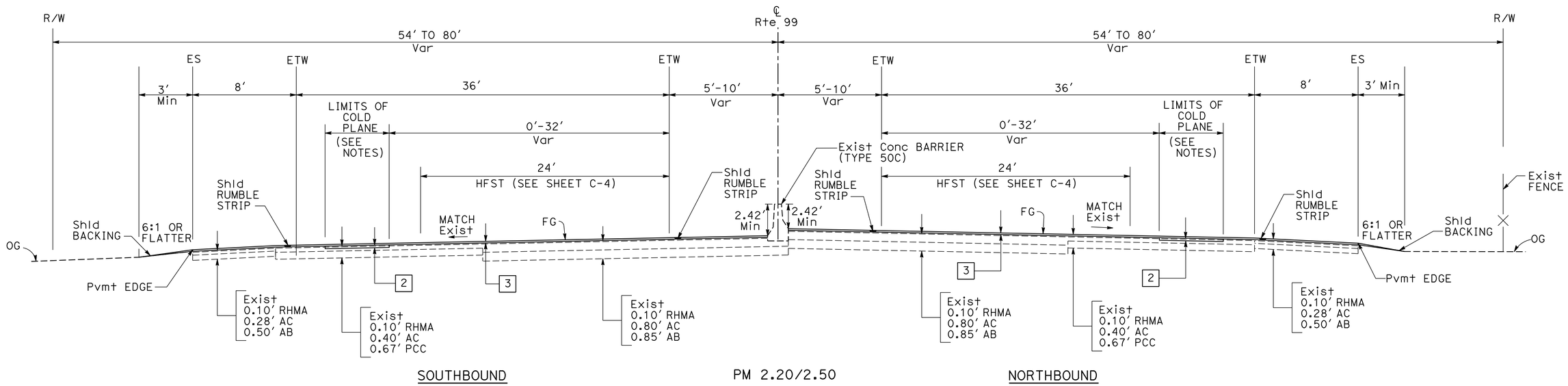

SOUTHBOUND

PM 2.20/2.50

ROUTE 99

NORTHBOUND

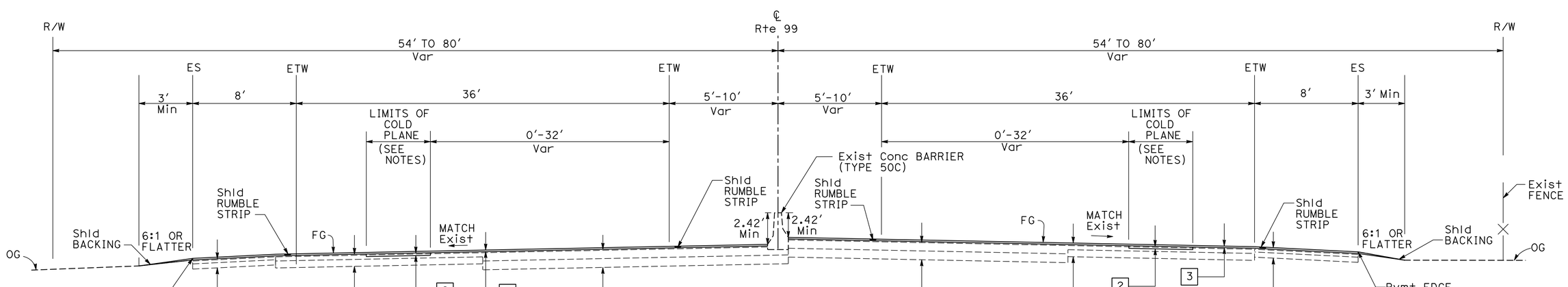

SOUTHBOUND

PM 1.69/2.20

ROUTE 99

NORTHBOUND

TYPICAL CROSS SECTIONS

NO SCALE

X-2

REVISED BY	HR	DM	
DATE REVISED	02-12-16	04-11-16	
RAY CHANG			
DAVID MELIS			
CALCULATED-DESIGNED BY			
CHECKED BY			
FUNCTIONAL SUPERVISOR			
CAROLINE REYES			

STATE OF CALIFORNIA - DEPARTMENT OF TRANSPORTATION
Caltrans®
DESIGN

LAST REVISION 06-30-16
DATE PLOTTED => 25-JUL-2016
TIME PLOTTED => 15:13

Dist	COUNTY	ROUTE	POST MILES TOTAL PROJECT	SHEET No.	TOTAL SHEETS
10	SJ	99	0.0/5.7	4	116

David E. Melis 5/2/16
REGISTERED CIVIL ENGINEER DATE

5-2-16
PLANS APPROVAL DATE

REGISTERED PROFESSIONAL ENGINEER
DAVID E MELIS
No. 54383
Exp. 12/31/2017
CIVIL
STATE OF CALIFORNIA

THE STATE OF CALIFORNIA OR ITS OFFICERS OR AGENTS SHALL NOT BE RESPONSIBLE FOR THE ACCURACY OR COMPLETENESS OF SCANNED COPIES OF THIS PLAN SHEET.

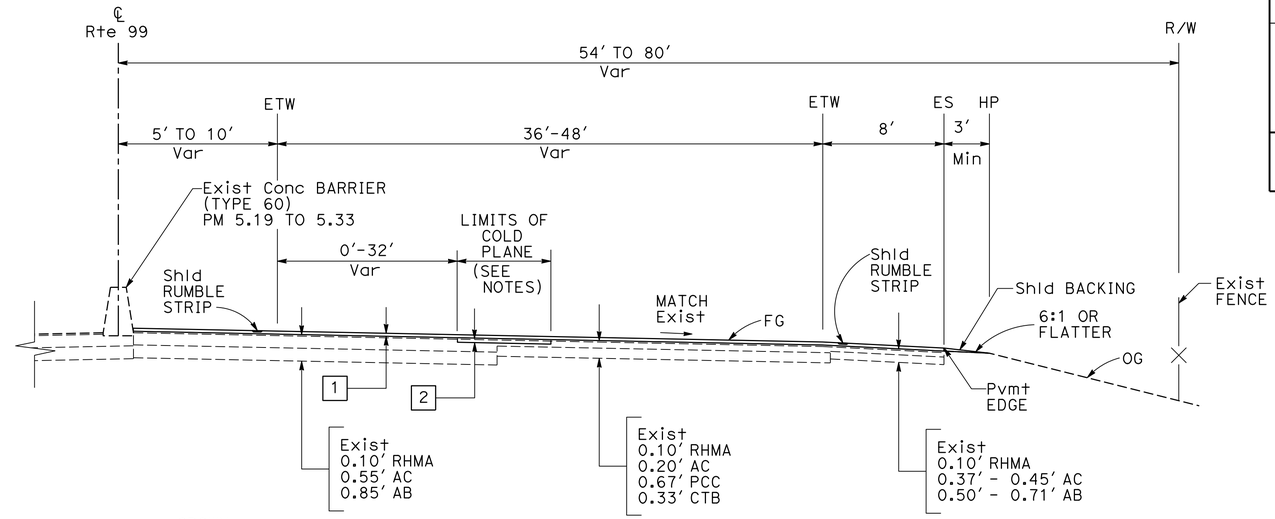

NORTHBOUND

PM 5.19/5.70 NB

ROUTE 99

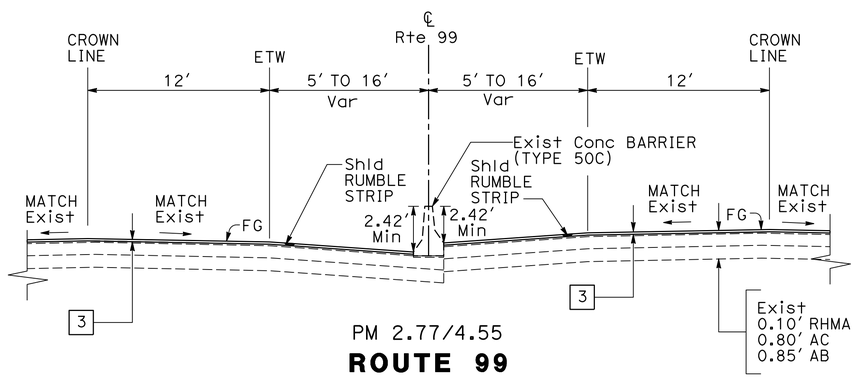

PM 2.77/4.55

ROUTE 99

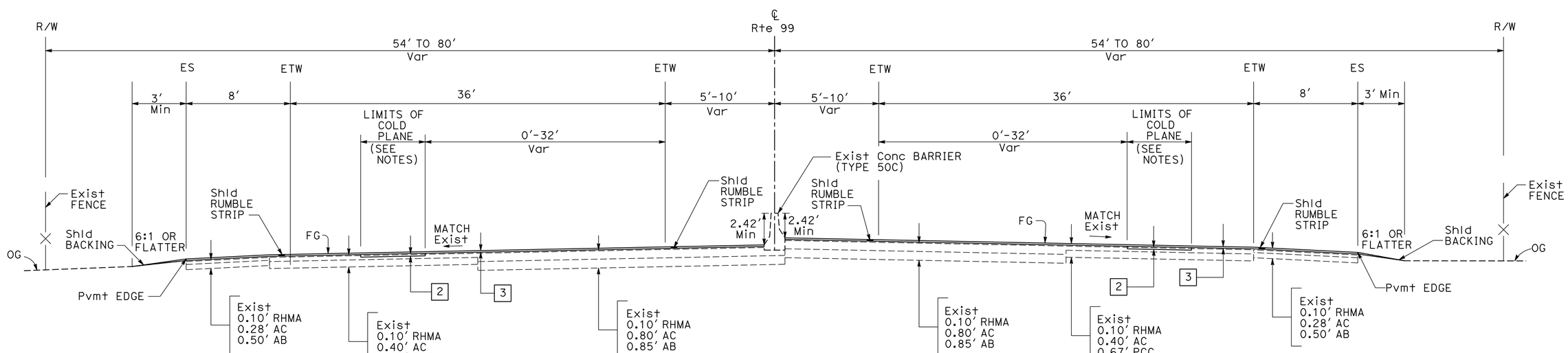

SOUTHBOUND

PM 2.50/2.77; 4.55/5.19 NB
PM 2.50/2.77; 4.55/4.89 SB

NORTHBOUND

ROUTE 99

TYPICAL CROSS SECTIONS

NO SCALE

X-3

REVISED BY	DATE REVISED
DM	04-11-16
HR	02-12-16

RAY CHANG — DAVID MELIS
CALCULATED-DESIGNED BY — CHECKED BY
FUNCTIONAL SUPERVISOR — CAROLINE REYES

STATE OF CALIFORNIA - DEPARTMENT OF TRANSPORTATION
Caltrans®
DESIGN

LAST REVISION 06-30-16
DATE PLOTTED => 25-JUL-2016
TIME PLOTTED => 15:13

Dist	COUNTY	ROUTE	POST MILES TOTAL PROJECT	SHEET No.	TOTAL SHEETS
10	SJ	99	0.0/5.7	5	116

REGISTERED CIVIL ENGINEER 5/2/16 DATE

5-2-16
PLANS APPROVAL DATE

REGISTERED PROFESSIONAL ENGINEER DAVID E MELIS No. 54383 Exp. 12/31/2017 CIVIL STATE OF CALIFORNIA

THE STATE OF CALIFORNIA OR ITS OFFICERS OR AGENTS SHALL NOT BE RESPONSIBLE FOR THE ACCURACY OR COMPLETENESS OF SCANNED COPIES OF THIS PLAN SHEET.

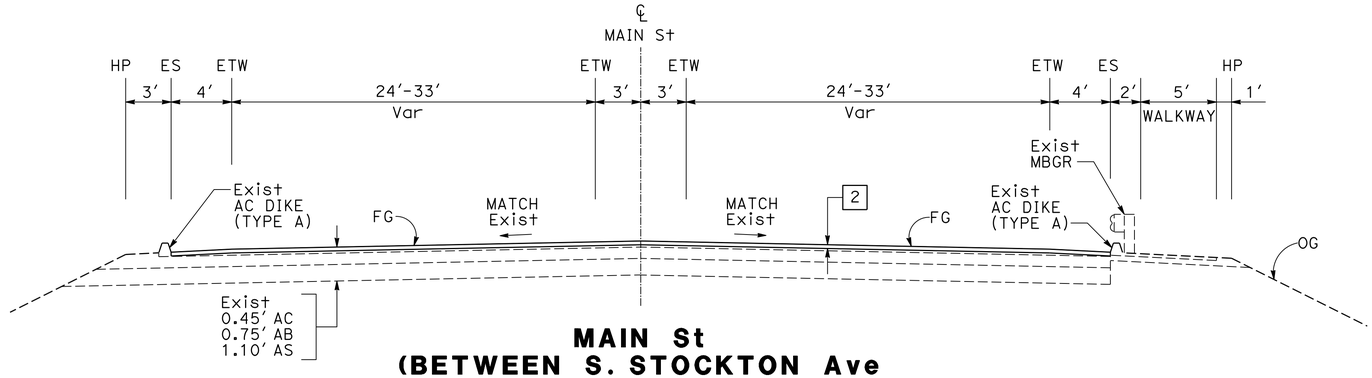

MAIN St (BETWEEN S. STOCKTON Ave AND E. MAIN St)

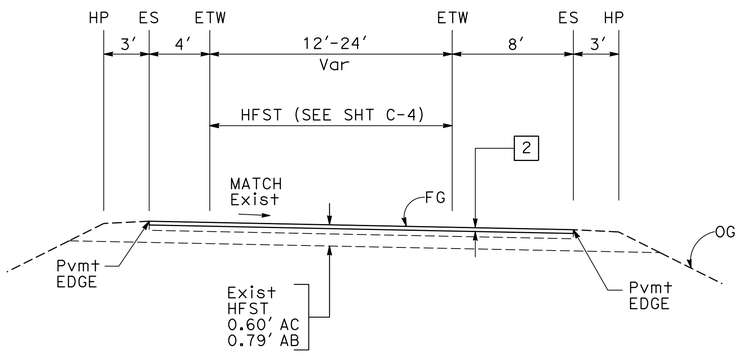

COLONY Rd ON-RAMP

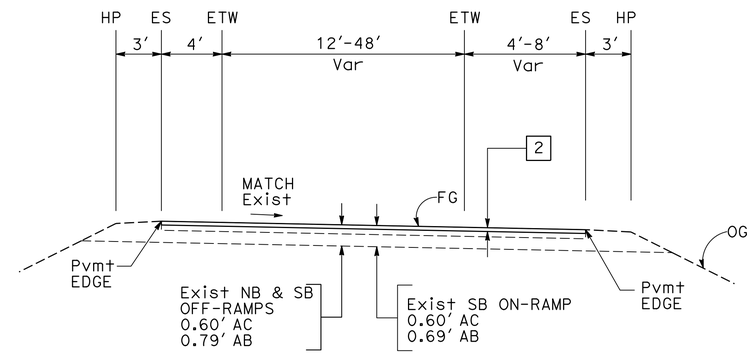

JACK TONE Rd ON/OFF-RAMPS

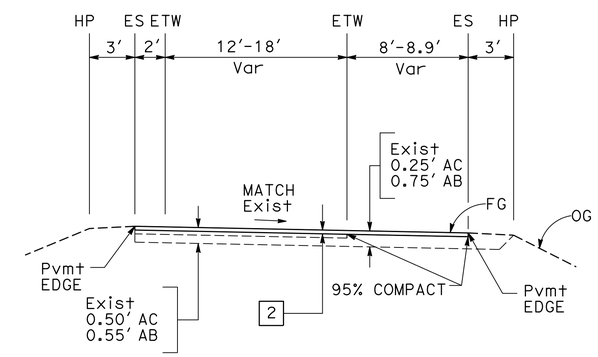

FULTON Ave NB ON/OFF-RAMPS

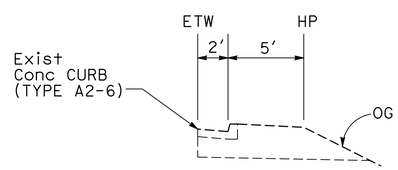

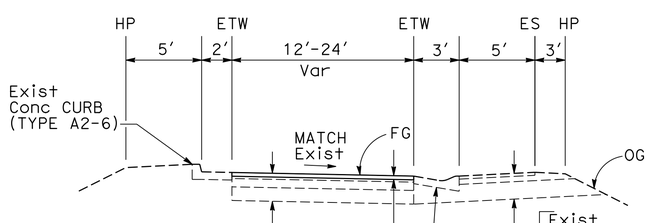

MAIN St NB/SB ON/OFF-RAMPS

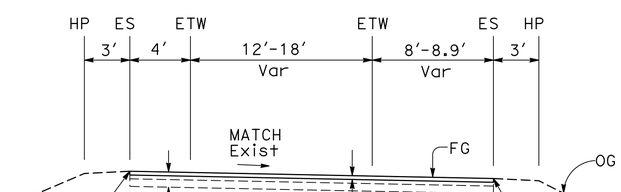

AUSTIN Rd NB OFF-RAMP

TYPICAL CROSS SECTIONS

NO SCALE

X-4

DM	07-15-16		
DM	04-11-16		
HR	02-12-16	REVISED BY	DATE REVISED
RAY CHANG	DAVID MELIS	CALCULATED-DESIGNED BY	CHECKED BY
FUNCTIONAL SUPERVISOR	CAROLINE REYES		

STATE OF CALIFORNIA - DEPARTMENT OF TRANSPORTATION
Caltrans® DESIGN

LAST REVISION 07-15-16
DATE PLOTTED => 25-JUL-2016
TIME PLOTTED => 15:13

Dist	COUNTY	ROUTE	POST MILES TOTAL PROJECT	SHEET No.	TOTAL SHEETS
10	SJ	99	0.0/5.7	6	116

David E. Melis 5/2/16
REGISTERED CIVIL ENGINEER DATE

5-2-16
PLANS APPROVAL DATE

REGISTERED PROFESSIONAL ENGINEER
DAVID E MELIS
No. 54383
Exp. 12/31/2017
CIVIL
STATE OF CALIFORNIA

THE STATE OF CALIFORNIA OR ITS OFFICERS OR AGENTS SHALL NOT BE RESPONSIBLE FOR THE ACCURACY OR COMPLETENESS OF SCANNED COPIES OF THIS PLAN SHEET.

NOTES:

1. THIS PLAN ONLY SHOWS THE APPROXIMATE LOCATIONS OF CURB RAMPS AND GUARDRAILS. FOR LOCATIONS AND DIMENSIONS, SEE SUMMARY OF QUANTITIES SHEETS.
2. FOR MINOR CONCRETE (TEXTURED PAVING), SEE SHEET C-22 FOR DETAILS.

LEGEND (SHEETS C-1 TO C-8 ONLY):

- MINOR CONCRETE (TEXTURED PAVING) HERRINGBONE PATTERN, BRICK RED
- MINOR CONCRETE (TEXTURED PAVING) RUNNING BOND BRICK PATTERN, BRICK RED
- HIGH FRICTION SURFACE TREATMENT
- MGS LOCATION No.
- CURB RAMP LOCATION No.
- GORE PAVING LOCATION No.

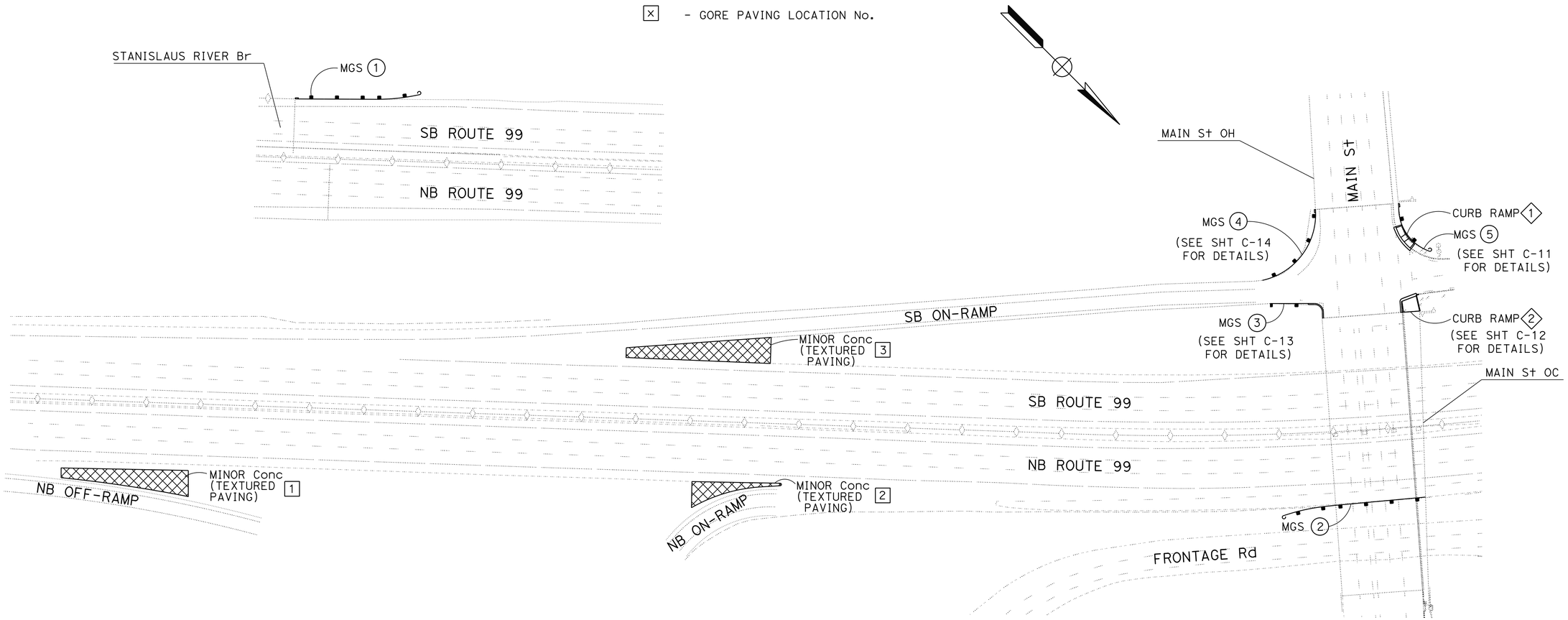

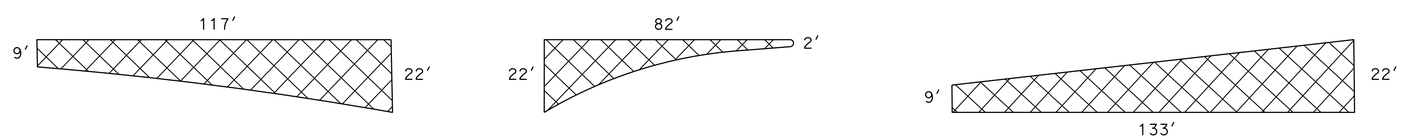

NB OFF-RAMP TO MAIN St LOCATION 1

NB ON-RAMP FROM MAIN St LOCATION 2

SB ON-RAMP FROM MAIN St LOCATION 3

MINOR CONCRETE (TEXTURED PAVING)

CONSTRUCTION DETAILS

NO SCALE

C-1

REVISED BY	DATE REVISED
DM	05-04-16
DM	03-16-16
HR	02-12-16

RAY CHANG — DAVID MELIS
CALCULATED-DESIGNED BY — CHECKED BY
FUNCTIONAL SUPERVISOR — CAROLINE REYES

STATE OF CALIFORNIA - DEPARTMENT OF TRANSPORTATION
Caltrans® DESIGN

LAST REVISION 06-30-16 | DATE PLOTTED => 25-JUL-2016 | TIME PLOTTED => 15:13

Dist	COUNTY	ROUTE	POST MILES TOTAL PROJECT	SHEET No.	TOTAL SHEETS
10	SJ	99	0.0/5.7	7	116

David E. Melis 5/2/16
REGISTERED CIVIL ENGINEER DATE

5-2-16
PLANS APPROVAL DATE

REGISTERED PROFESSIONAL ENGINEER
DAVID E MELIS
No. 54383
Exp. 12/31/2017
CIVIL
STATE OF CALIFORNIA

THE STATE OF CALIFORNIA OR ITS OFFICERS OR AGENTS SHALL NOT BE RESPONSIBLE FOR THE ACCURACY OR COMPLETENESS OF SCANNED COPIES OF THIS PLAN SHEET.

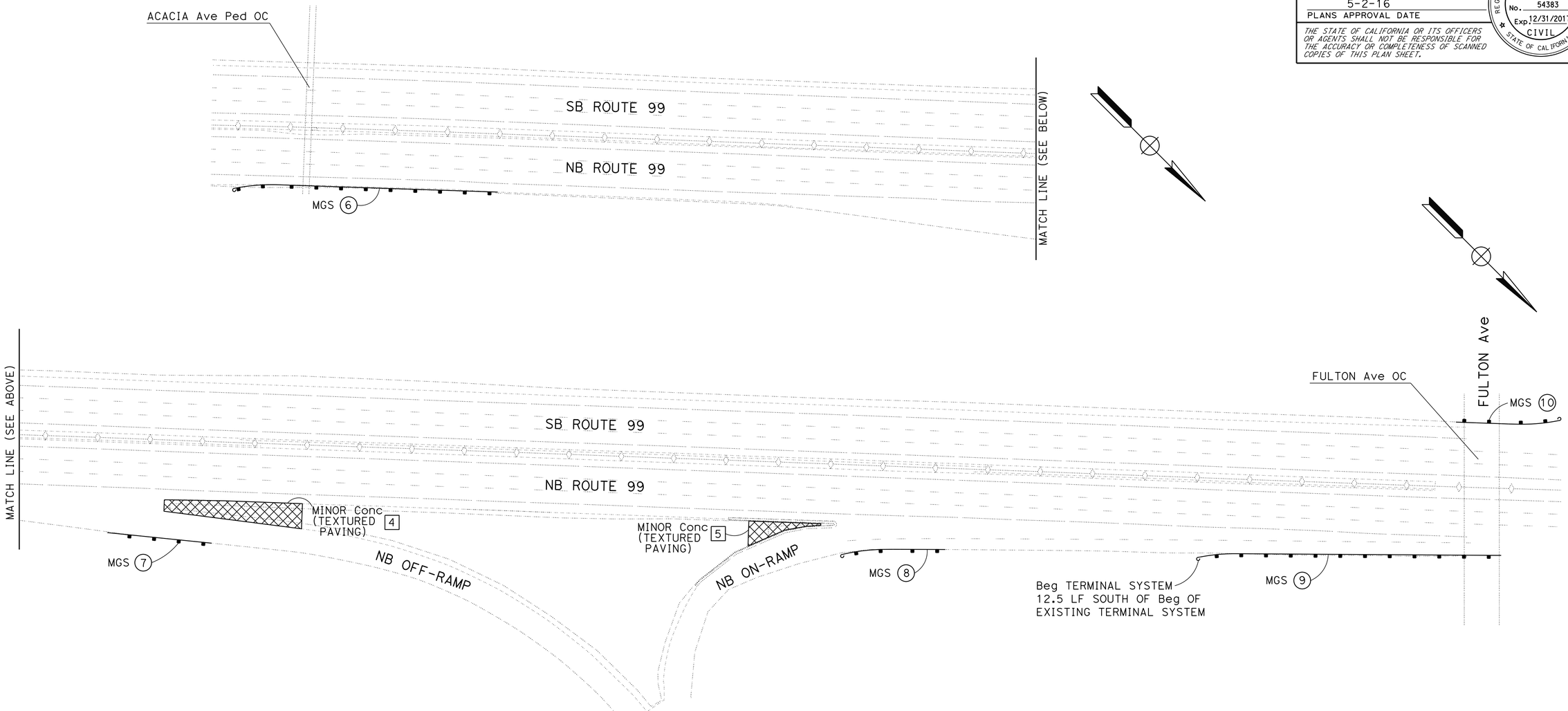

NB OFF-RAMP TO FULTON Ave
LOCATION 4

NB ON-RAMP FROM FULTON Ave
LOCATION 5

MINOR CONCRETE (TEXTURED PAVING)

CONSTRUCTION DETAILS

NO SCALE

C-2

DM	DM	HR	REVISED BY
04-11-16	03-16-16	02-12-16	DATE REVISED

RAY CHANG — DAVID MELIS — CALCULATED-DESIGNED BY / CHECKED BY

FUNCTIONAL SUPERVISOR — CAROLINE REYES

STATE OF CALIFORNIA - DEPARTMENT OF TRANSPORTATION — Caltrans — DESIGN

LAST REVISION 06-20-16 — DATE PLOTTED => 25-JUL-2016 — TIME PLOTTED => 15:13

Dist	COUNTY	ROUTE	POST MILES TOTAL PROJECT	SHEET No.	TOTAL SHEETS
10	SJ	99	0.0/5.7	8	116

David E. Melis 5/2/16
REGISTERED CIVIL ENGINEER DATE

5-2-16
PLANS APPROVAL DATE

REGISTERED PROFESSIONAL ENGINEER
DAVID E MELIS
No. 54383
Exp. 12/31/2017
CIVIL
STATE OF CALIFORNIA

THE STATE OF CALIFORNIA OR ITS OFFICERS OR AGENTS SHALL NOT BE RESPONSIBLE FOR THE ACCURACY OR COMPLETENESS OF SCANNED COPIES OF THIS PLAN SHEET.

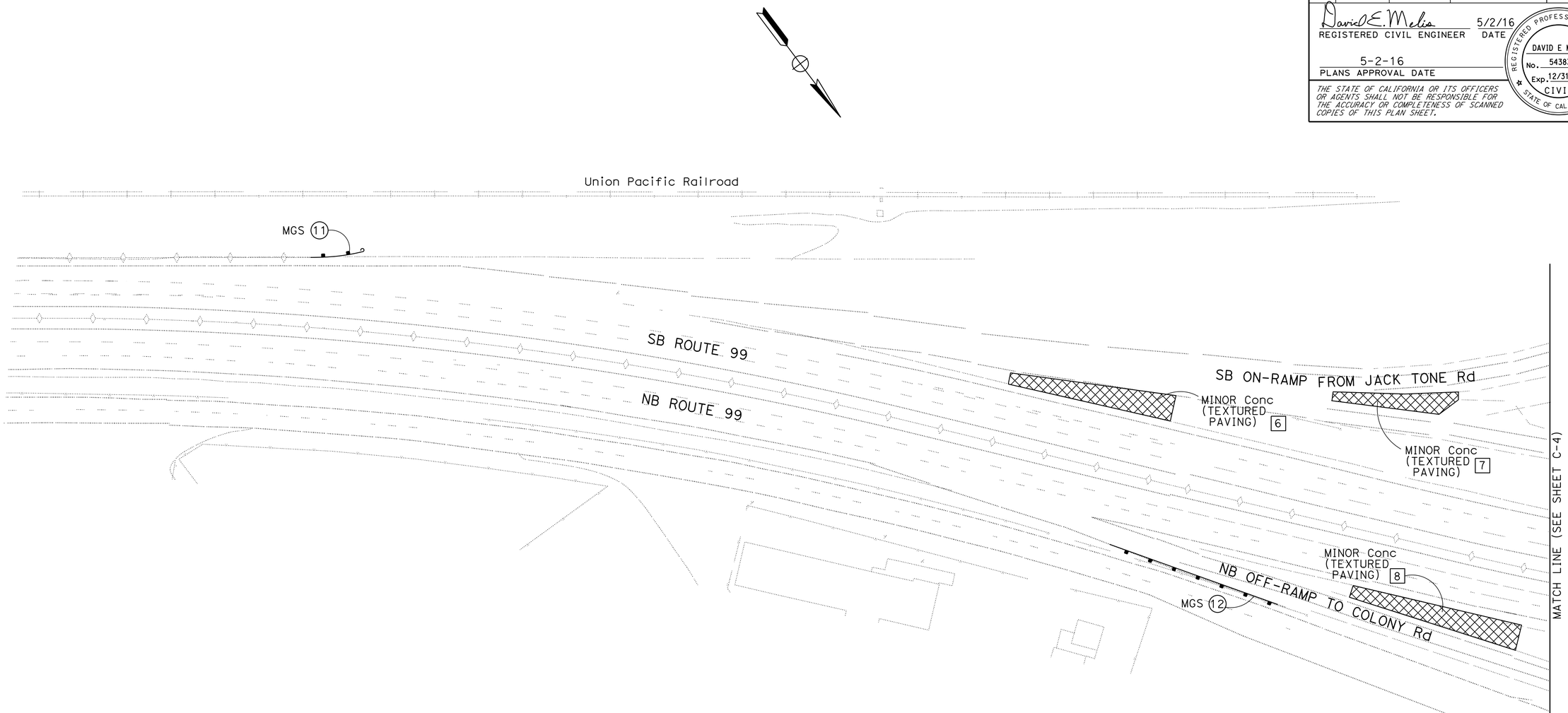

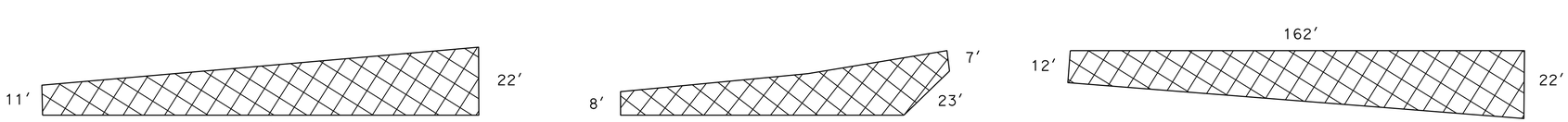

SB ON-RAMP FROM JACK TONE Rd
LOCATION 6

NB ON-RAMP FROM FULTON Ave
LOCATION 7

NB OFF-RAMP TO COLONY Rd
LOCATION 8

MINOR CONCRETE (TEXTURED PAVING)

CONSTRUCTION DETAILS

NO SCALE

C-3

DM	DM	HR	REVISED BY
04-11-16	03-16-16	02-12-16	DATE REVISED

RAY CHANG — CALCULATED-DESIGNED BY
DAVID MELIS — CHECKED BY
CAROLINE REYES — FUNCTIONAL SUPERVISOR

STATE OF CALIFORNIA - DEPARTMENT OF TRANSPORTATION
Caltrans
DESIGN

LAST REVISION 06-30-16 | DATE PLOTTED => 25-JUL-2016 | TIME PLOTTED => 15:13

Dist	COUNTY	ROUTE	POST MILES TOTAL PROJECT	SHEET No.	TOTAL SHEETS
10	SJ	99	0.0/5.7	9	116

David E. Melis 5/2/16
REGISTERED CIVIL ENGINEER DATE

5-2-16
PLANS APPROVAL DATE

REGISTERED PROFESSIONAL ENGINEER
DAVID E MELIS
No. 54383
Exp. 12/31/2017
CIVIL
STATE OF CALIFORNIA

THE STATE OF CALIFORNIA OR ITS OFFICERS OR AGENTS SHALL NOT BE RESPONSIBLE FOR THE ACCURACY OR COMPLETENESS OF SCANNED COPIES OF THIS PLAN SHEET.

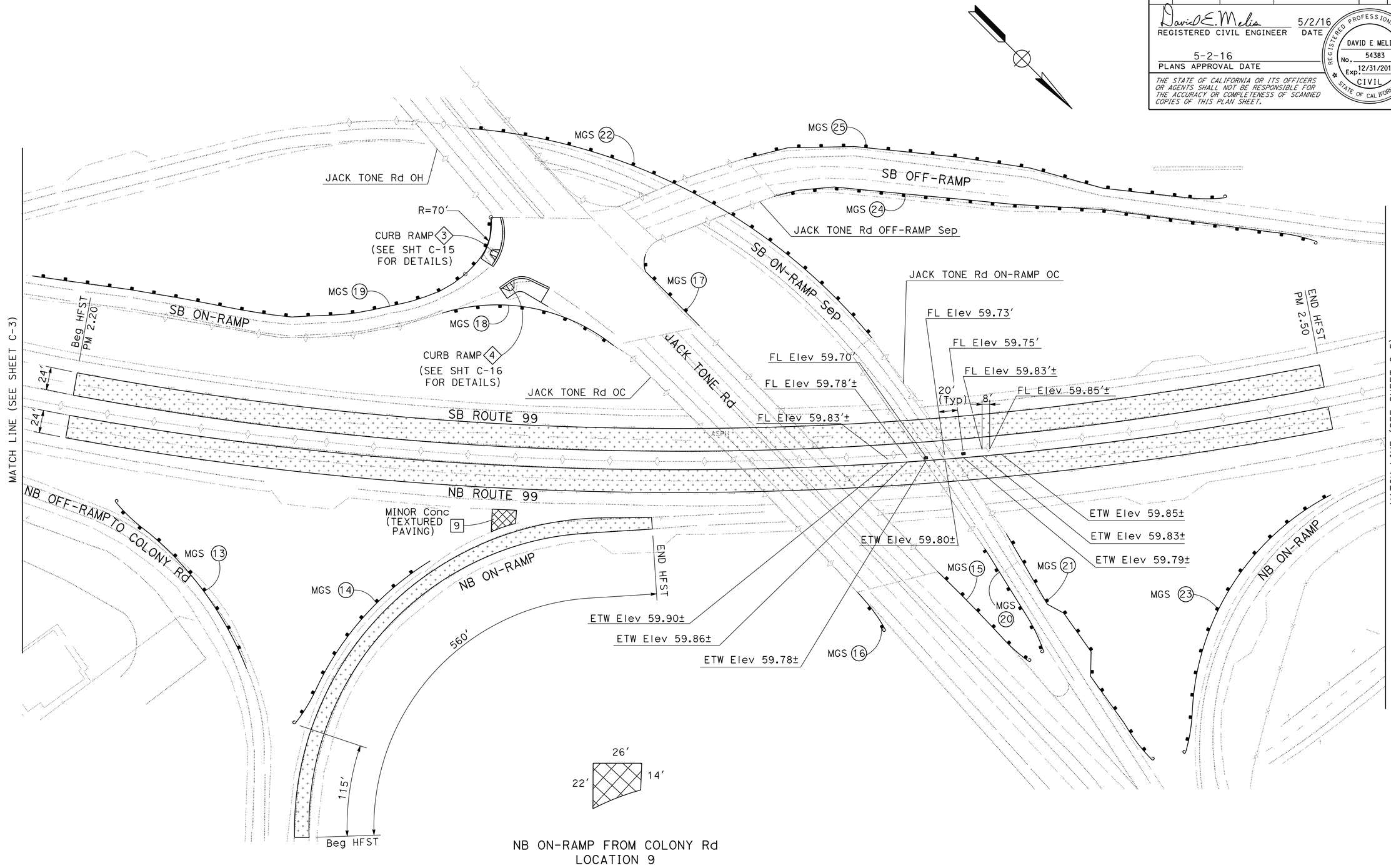

NB ON-RAMP FROM COLONY Rd
LOCATION 9

MINOR CONCRETE (TEXTURED PAVING)

CONSTRUCTION DETAILS
NO SCALE

C-4

REVISED BY	DATE REVISED
HR	02-12-16
DM	03-21-16
DM	04-11-16

CALCULATED-DESIGNED BY: RAY CHANG
CHECKED BY: DAVID MELIS
FUNCTIONAL SUPERVISOR: CAROLINE REYES

STATE OF CALIFORNIA - DEPARTMENT OF TRANSPORTATION
Caltrans
DESIGN

LAST REVISION 06-30-16
DATE PLOTTED => 25-JUL-2016
TIME PLOTTED => 15:13

Dist	COUNTY	ROUTE	POST MILES TOTAL PROJECT	SHEET No.	TOTAL SHEETS
10	SJ	99	0.0/5.7	10	116

David E. Melis 5/2/16
REGISTERED CIVIL ENGINEER DATE

5-2-16
PLANS APPROVAL DATE

REGISTERED PROFESSIONAL ENGINEER
DAVID E MELIS
No. 54383
Exp. 12/31/2017
CIVIL
STATE OF CALIFORNIA

THE STATE OF CALIFORNIA OR ITS OFFICERS OR AGENTS SHALL NOT BE RESPONSIBLE FOR THE ACCURACY OR COMPLETENESS OF SCANNED COPIES OF THIS PLAN SHEET.

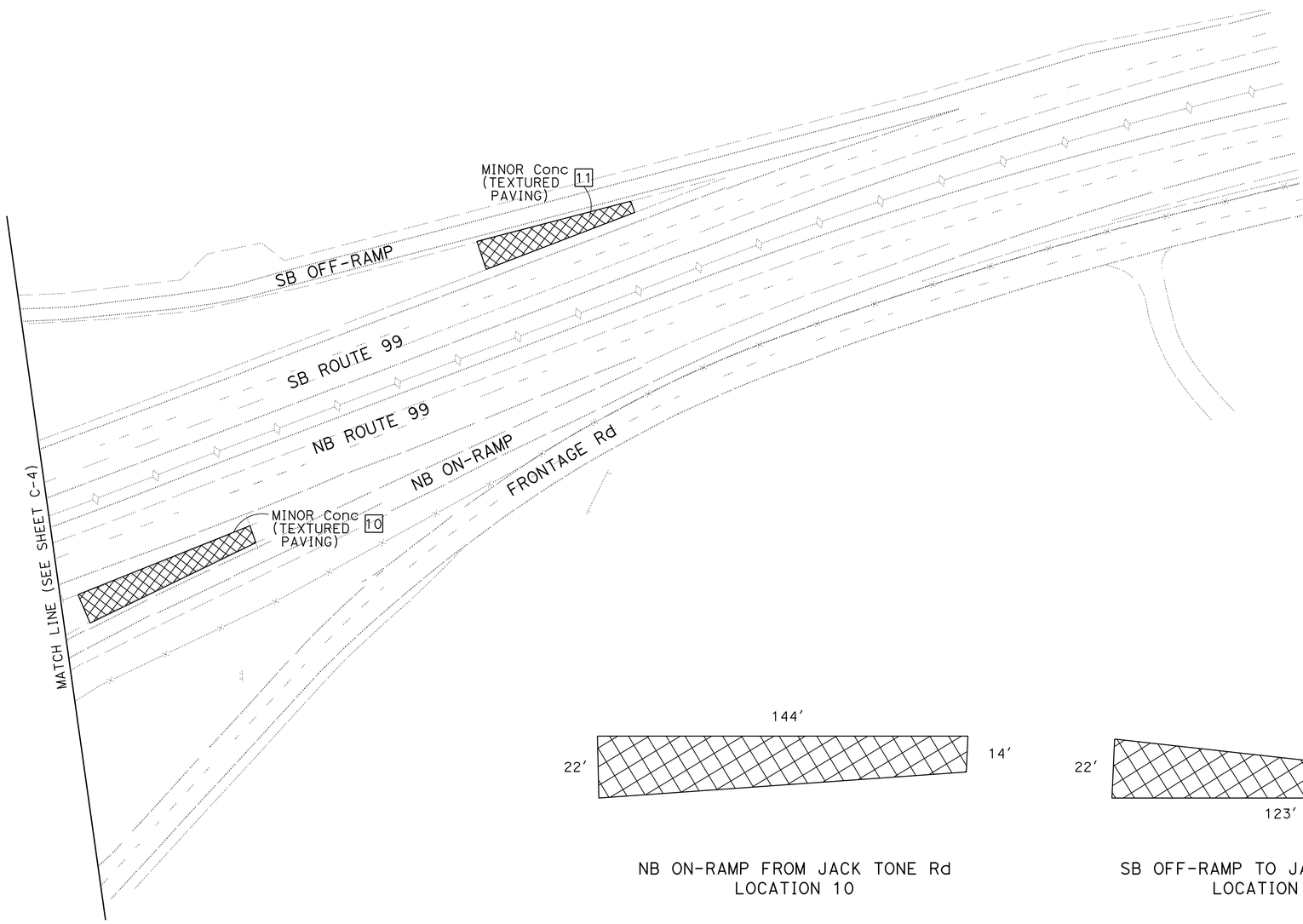

NB ON-RAMP FROM JACK TONE Rd
LOCATION 10

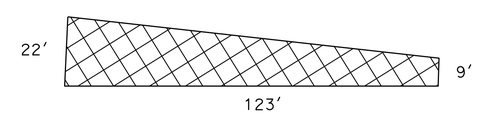

SB OFF-RAMP TO JACK TONE Rd
LOCATION 11

MINOR CONCRETE (TEXTURED PAVING)

CONSTRUCTION DETAILS

NO SCALE

C-5

DM	DM	HR	REVISED BY
04-11-16	03-16-16	02-12-16	DATE REVISED

RAY CHANG
DAVID MELIS

CALCULATED-DESIGNED BY
CHECKED BY

FUNCTIONAL SUPERVISOR
CAROLINE REYES

STATE OF CALIFORNIA - DEPARTMENT OF TRANSPORTATION
Caltrans®
DESIGN

LAST REVISION 06-30-16
DATE PLOTTED => 25-JUL-2016
TIME PLOTTED => 15:13

Dist	COUNTY	ROUTE	POST MILES TOTAL PROJECT	SHEET No.	TOTAL SHEETS
10	SJ	99	0.0/5.7	11	116

David E. Melis 5/2/16
REGISTERED CIVIL ENGINEER DATE

5-2-16
PLANS APPROVAL DATE

REGISTERED PROFESSIONAL ENGINEER
DAVID E MELIS
No. 54383
Exp. 12/31/2017
CIVIL
STATE OF CALIFORNIA

THE STATE OF CALIFORNIA OR ITS OFFICERS OR AGENTS SHALL NOT BE RESPONSIBLE FOR THE ACCURACY OR COMPLETENESS OF SCANNED COPIES OF THIS PLAN SHEET.

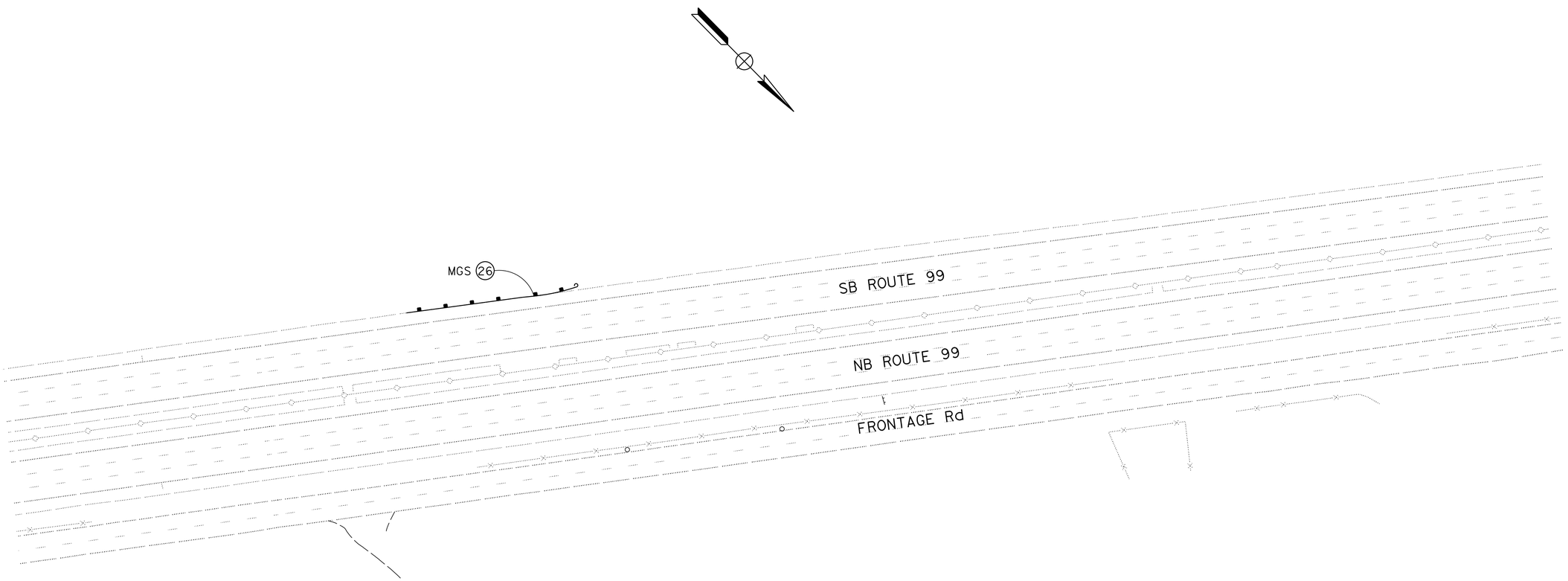

CONSTRUCTION DETAILS

NO SCALE

C-6

REVISED BY	DATE REVISED
DM	04-11-16
DM	03-16-16
HR	02-12-16

CALCULATED-DESIGNED BY: RAY CHANG
CHECKED BY: DAVID MELIS

FUNCTIONAL SUPERVISOR: CAROLINE REYES

STATE OF CALIFORNIA - DEPARTMENT OF TRANSPORTATION
Caltrans
DESIGN

LAST REVISION 06-30-16
DATE PLOTTED => 25-JUL-2016
TIME PLOTTED => 15:13

Dist	COUNTY	ROUTE	POST MILES TOTAL PROJECT	SHEET No.	TOTAL SHEETS
10	SJ	99	0.0/5.7	12	116

REGISTERED CIVIL ENGINEER 5/2/16 DATE

5-2-16
PLANS APPROVAL DATE

REGISTERED PROFESSIONAL ENGINEER
DAVID E MELIS
No. 54383
Exp 12/31/2017
CIVIL
STATE OF CALIFORNIA

THE STATE OF CALIFORNIA OR ITS OFFICERS OR AGENTS SHALL NOT BE RESPONSIBLE FOR THE ACCURACY OR COMPLETENESS OF SCANNED COPIES OF THIS PLAN SHEET.

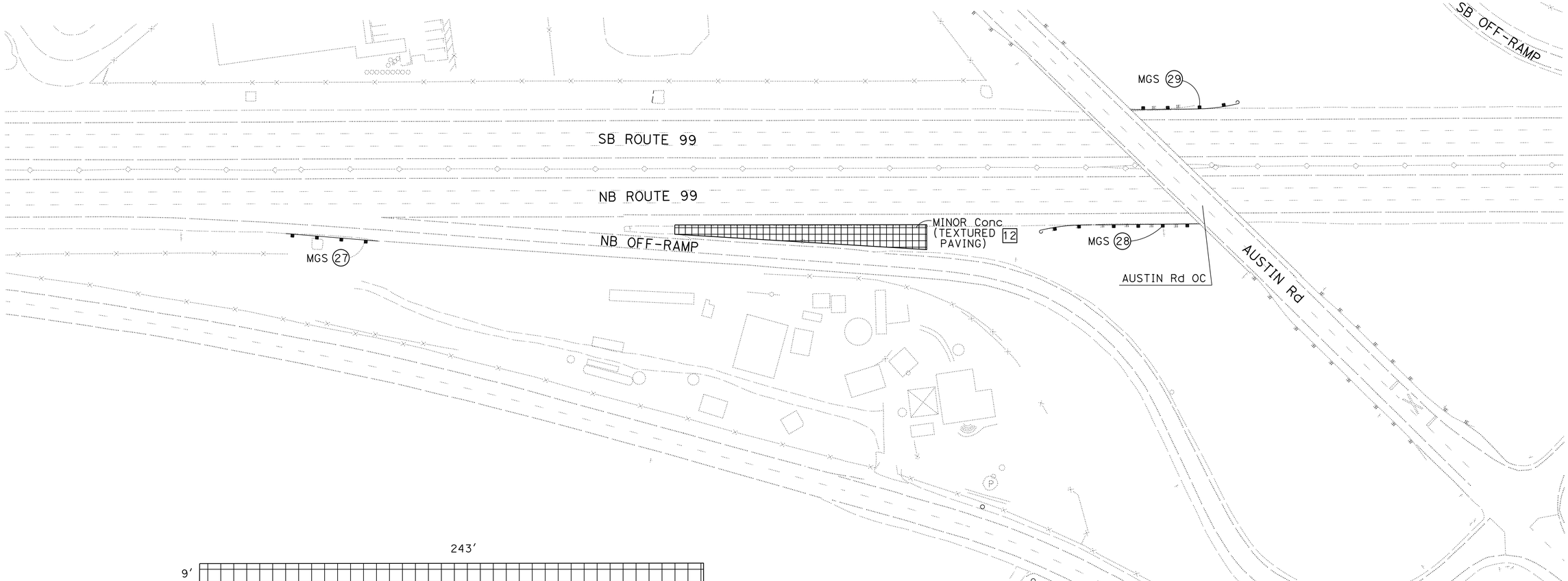

NB OFF-RAMP TO AUSTIN Rd
LOCATION 12

MINOR CONCRETE (TEXTURED PAVING)

CONSTRUCTION DETAILS

NO SCALE

C-7

DM	DM	HR	REVISED BY
04-11-16	03-16-16	02-12-16	DATE REVISED

RAY CHANG — CALCULATED-DESIGNED BY
DAVID MELIS — CHECKED BY
CAROLINE REYES — FUNCTIONAL SUPERVISOR

STATE OF CALIFORNIA - DEPARTMENT OF TRANSPORTATION
Caltrans
DESIGN

LAST REVISION 06-30-16
DATE PLOTTED => 25-JUL-2016
TIME PLOTTED => 15:13

Dist	COUNTY	ROUTE	POST MILES TOTAL PROJECT	SHEET No.	TOTAL SHEETS
10	SJ	99	0.0/5.7	13	116

David E. Melis 5/2/16
REGISTERED CIVIL ENGINEER DATE

5-2-16
PLANS APPROVAL DATE

REGISTERED PROFESSIONAL ENGINEER
DAVID E MELIS
No. 54383
Exp 12/31/2017
CIVIL
STATE OF CALIFORNIA

THE STATE OF CALIFORNIA OR ITS OFFICERS OR AGENTS SHALL NOT BE RESPONSIBLE FOR THE ACCURACY OR COMPLETENESS OF SCANNED COPIES OF THIS PLAN SHEET.

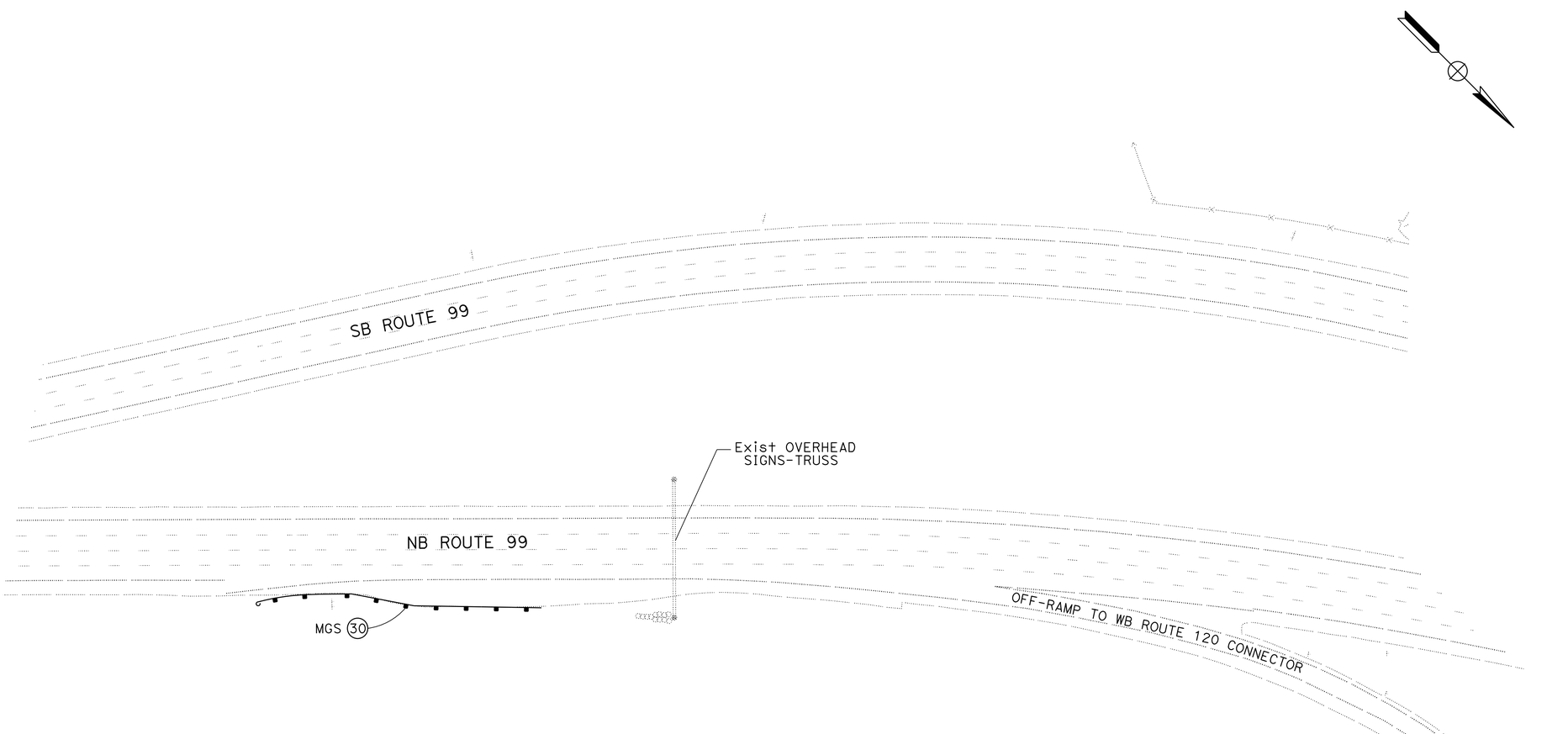

CONSTRUCTION DETAILS

NO SCALE

C-8

REVISED BY	DM
DATE REVISED	04-11-16
	DM
	03-16-16
	HR
	02-12-16
CALCULATED-DESIGNED BY	RAY CHANG
CHECKED BY	DAVID MELIS
FUNCTIONAL SUPERVISOR	CAROLINE REYES

STATE OF CALIFORNIA - DEPARTMENT OF TRANSPORTATION
Caltrans
DESIGN

LAST REVISION 06-20-16
DATE PLOTTED => 25-JUL-2016
TIME PLOTTED => 15:13

Dist	COUNTY	ROUTE	POST MILES TOTAL PROJECT	SHEET No.	TOTAL SHEETS
10	SJ	99	0.0/5.7	14	116

David E. Melis 5/2/16
REGISTERED CIVIL ENGINEER DATE

5-2-16
PLANS APPROVAL DATE

REGISTERED PROFESSIONAL ENGINEER
DAVID E MELIS
No. 54383
Exp. 12/31/2017
CIVIL
STATE OF CALIFORNIA

THE STATE OF CALIFORNIA OR ITS OFFICERS OR AGENTS SHALL NOT BE RESPONSIBLE FOR THE ACCURACY OR COMPLETENESS OF SCANNED COPIES OF THIS PLAN SHEET.

NOTES (SHEETS C-9 & C-10 ONLY):

1. THE CONTRACTOR MUST VERIFY ALL CONTROLLING FIELD DIMENSIONS BEFORE ORDERING OR FABRICATING ANY MATERIAL.
2. CUT AND REMOVE PORTION OF Exist RAILING AND BAGR AS REQUIRED.

LEGEND (SHEETS C-9 & C-10 ONLY):

-·-·-·- INDICATES EXISTING STRUCTURE

——— INDICATES NEW CONSTRUCTION

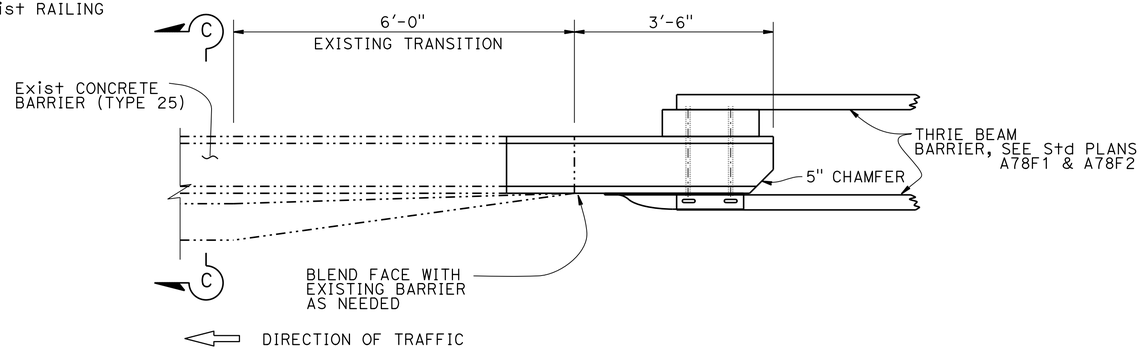

PLAN
¾" = 1'-0"

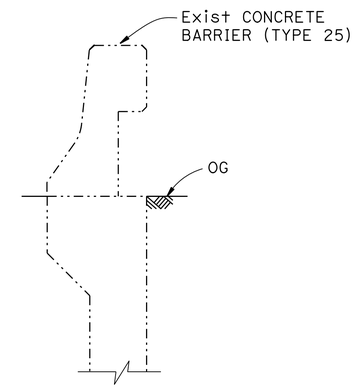

SECTION C-C
¾" = 1'-0"

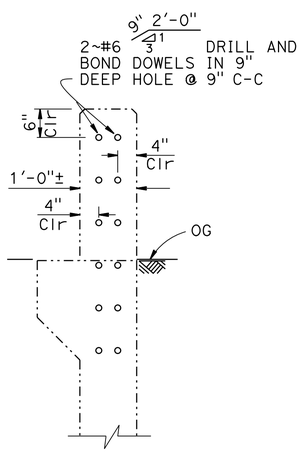

SECTION A-A
¾" = 1'-0"

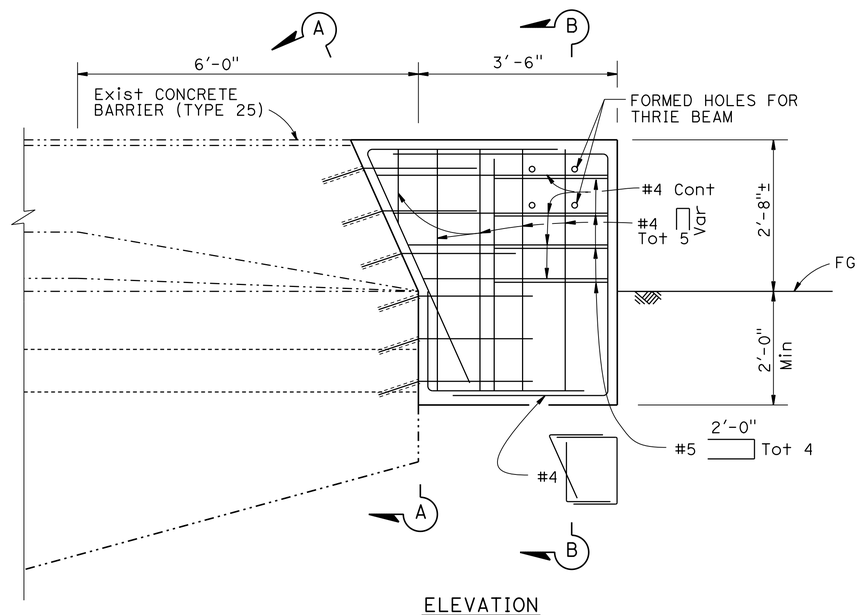

ELEVATION
¾" = 1'-0"

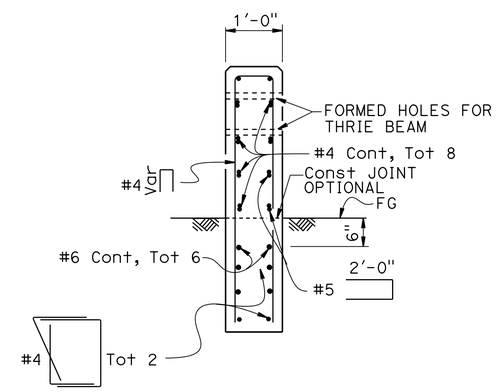

SECTION B-B
¾" = 1'-0"

TRANSITION RAILING CONNECTION (TYPE 25)

CONSTRUCTION DETAILS
NO SCALE
C-9

DM	04-11-16	RAY CHANG	DAVID MELIS
HR	02-12-16	CALCULATED-DESIGNED BY	CHECKED BY
REVISED BY	DATE REVISED	FUNCTIONAL SUPERVISOR	CAROLINE REYES

STATE OF CALIFORNIA - DEPARTMENT OF TRANSPORTATION
Caltrans®
DESIGN

LAST REVISION 06-30-16
DATE PLOTTED => 25-JUL-2016
TIME PLOTTED => 15:13

Dist	COUNTY	ROUTE	POST MILES TOTAL PROJECT	SHEET No.	TOTAL SHEETS
10	SJ	99	0.0/5.7	15	116

David E. Melis 5/2/16
REGISTERED CIVIL ENGINEER DATE

5-2-16
PLANS APPROVAL DATE

REGISTERED PROFESSIONAL ENGINEER
DAVID E MELIS
No. 54383
Exp. 12/31/2017
CIVIL
STATE OF CALIFORNIA

THE STATE OF CALIFORNIA OR ITS OFFICERS OR AGENTS SHALL NOT BE RESPONSIBLE FOR THE ACCURACY OR COMPLETENESS OF SCANNED COPIES OF THIS PLAN SHEET.

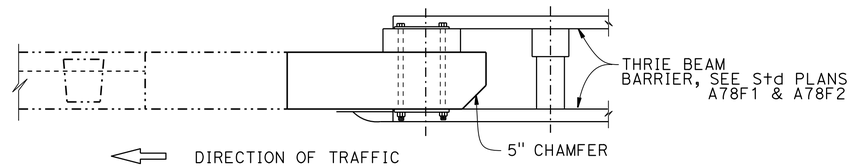

PLAN
3/4" = 1'-0"

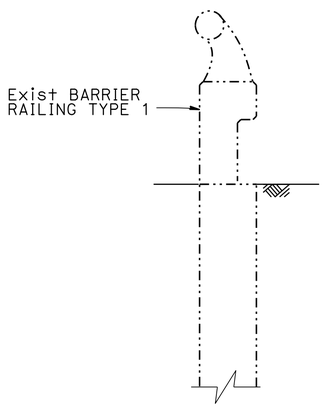

SECTION A-A
3/4" = 1'-0"

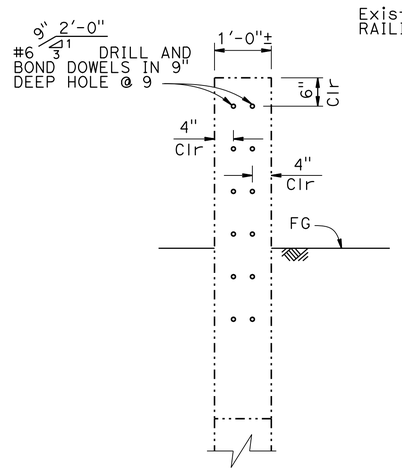

SECTION B-B
3/4" = 1'-0"

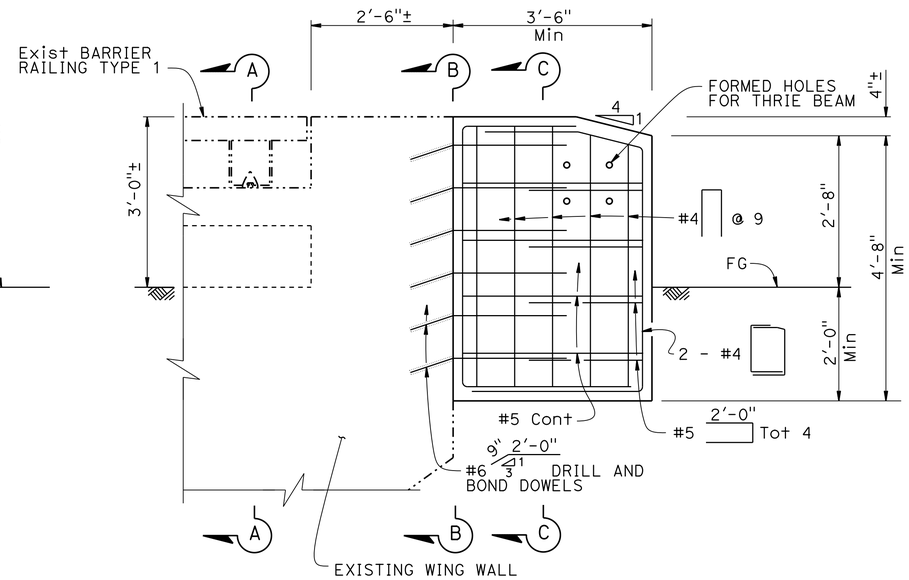

ELEVATION
3/4" = 1'-0"

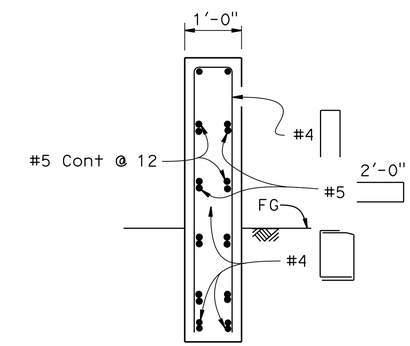

SECTION C-C
3/4" = 1'-0"

TRANSITION RAILING CONNECTION (TYPE 1)

CONSTRUCTION DETAILS
NO SCALE

C-10

REVISED BY	DATE REVISED
DM	04-11-16
HR	02-12-16

CALCULATED-DESIGNED BY: RAY CHANG
CHECKED BY: DAVID MELIS
FUNCTIONAL SUPERVISOR: CAROLINE REYES

STATE OF CALIFORNIA - DEPARTMENT OF TRANSPORTATION
Caltrans
DESIGN

LAST REVISION 06-30-16
DATE PLOTTED => 25-JUL-2016
TIME PLOTTED => 15:13

Dist	COUNTY	ROUTE	POST MILES TOTAL PROJECT	SHEET No.	TOTAL SHEETS
10	SJ	99	0.0/5.7	16	116

David E. Melis 5/2/16
REGISTERED CIVIL ENGINEER DATE

5-2-16
PLANS APPROVAL DATE

REGISTERED PROFESSIONAL ENGINEER DAVID E MELIS No. 54383 Exp. 12/31/2017 CIVIL STATE OF CALIFORNIA

THE STATE OF CALIFORNIA OR ITS OFFICERS OR AGENTS SHALL NOT BE RESPONSIBLE FOR THE ACCURACY OR COMPLETENESS OF SCANNED COPIES OF THIS PLAN SHEET.

NOTES (SHEETS C-11 TO C-19 ONLY):

1. FOR ACCURATE RIGHT OF WAY DATA, CONTACT RIGHT OF WAY ENGINEERING AT THE DISTRICT OFFICE.
2. FOR MORE DETAILS OF CURB RAMPS, SEE REVISED STANDARD PLAN A87A AND A88A.
3. PROTECT EXISTING ELEMENTS IN PLACE UNLESS OTHERWISE SHOWN.

LEGEND (SHEETS C-11 TO C-19 ONLY):

- 1' FULL DEPTH HMA (TYPE A)
- CLASS 2 AB
- MINOR CONCRETE
- COLD PLANE AC Pvmt (Var, 0.00' TO 0.15' OR 0.20')
- 0.25' COLD PLANE AC Pvmt 0.25' HMA (TYPE A)

ABBREVIATIONS (SHEETS C-11 TO C-19 ONLY):

AP - ANGLE POINT
CR - CURB RETURN
GB - GRADE BREAK
RHMA-G - RUBBERIZED HOT MIX ASPHALT (GAP GRADED)

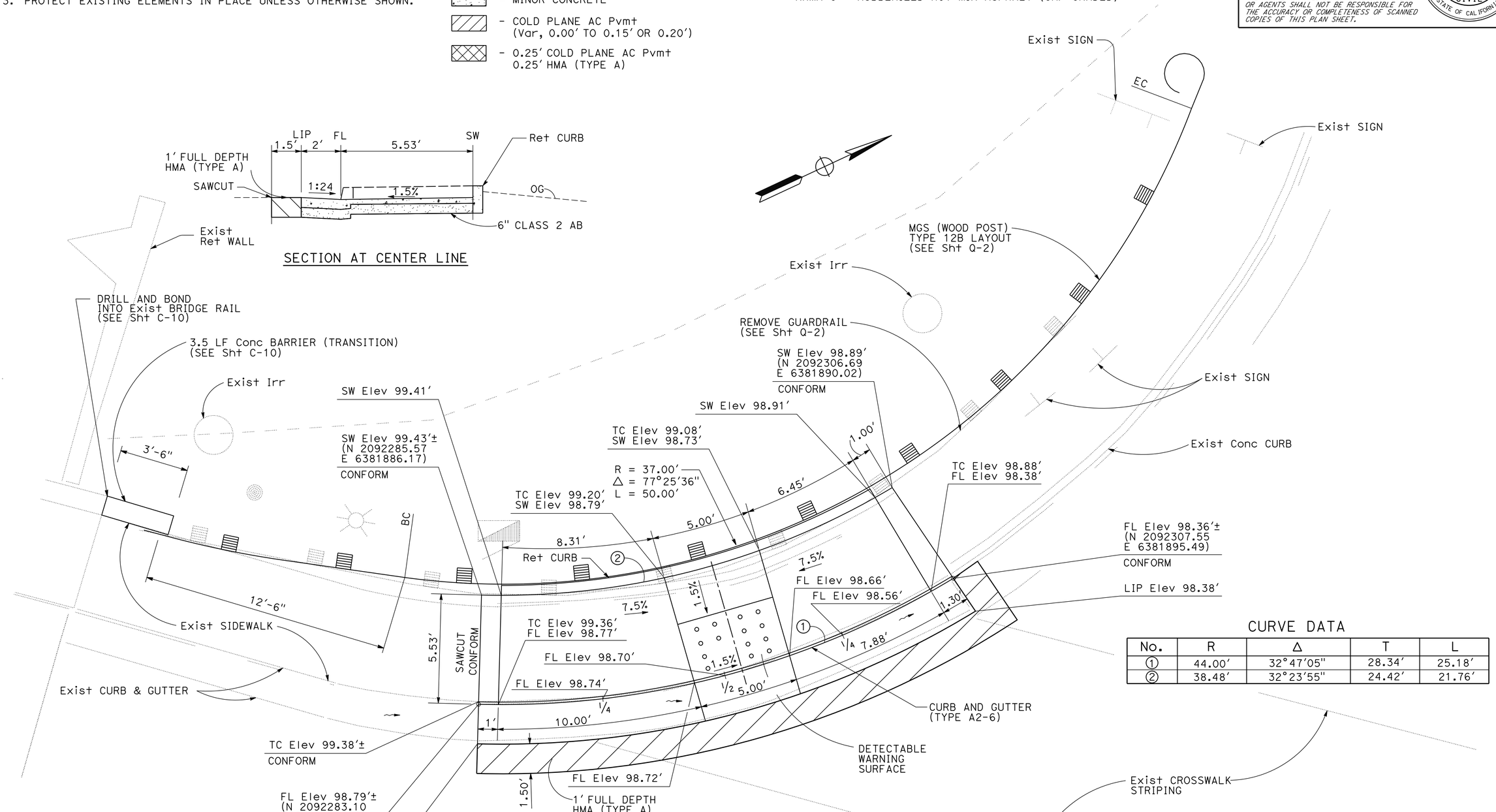

CURVE DATA

No.	R	Δ	T	L
1	44.00'	32°47'05"	28.34'	25.18'
2	38.48'	32°23'55"	24.42'	21.76'

CURB RAMP #1 (CASE C)

CONSTRUCTION DETAILS

NO SCALE

C-11

REVISED BY	DATE REVISED
DM	04-11-16
HR	02-12-16

RAY CHANG — DAVID MELIS
CALCULATED-DESIGNED BY — CHECKED BY
FUNCTIONAL SUPERVISOR — CAROLINE REYES

STATE OF CALIFORNIA - DEPARTMENT OF TRANSPORTATION
Caltrans® DESIGN

LAST REVISION 06-30-16 | DATE PLOTTED => 25-JUL-2016 | TIME PLOTTED => 15:13

Dist	COUNTY	ROUTE	POST MILES TOTAL PROJECT	SHEET No.	TOTAL SHEETS
10	SJ	99	0.0/5.7	17	116

David E. Melis 5/2/16
REGISTERED CIVIL ENGINEER DATE

5-2-16
PLANS APPROVAL DATE

REGISTERED PROFESSIONAL ENGINEER
DAVID E MELIS
No. 54383
Exp. 12/31/2017
CIVIL
STATE OF CALIFORNIA

THE STATE OF CALIFORNIA OR ITS OFFICERS OR AGENTS SHALL NOT BE RESPONSIBLE FOR THE ACCURACY OR COMPLETENESS OF SCANNED COPIES OF THIS PLAN SHEET.

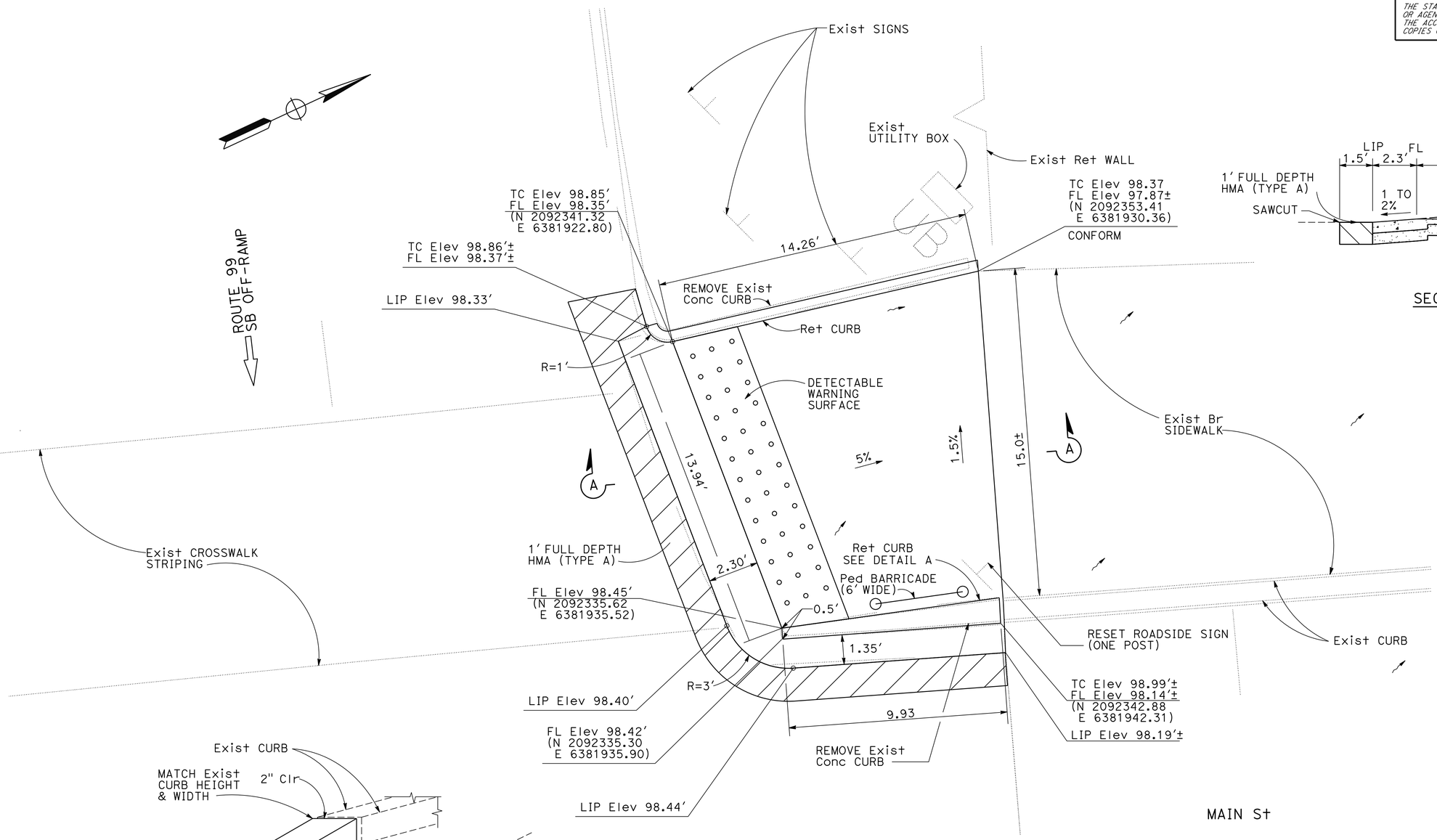

CURB RAMP #2 (CASE F Mod)

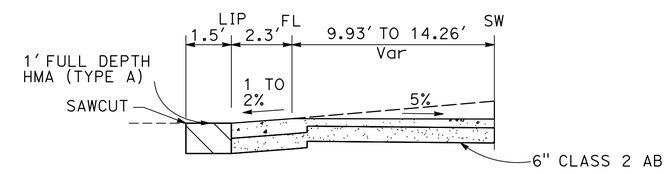

SECTION A-A

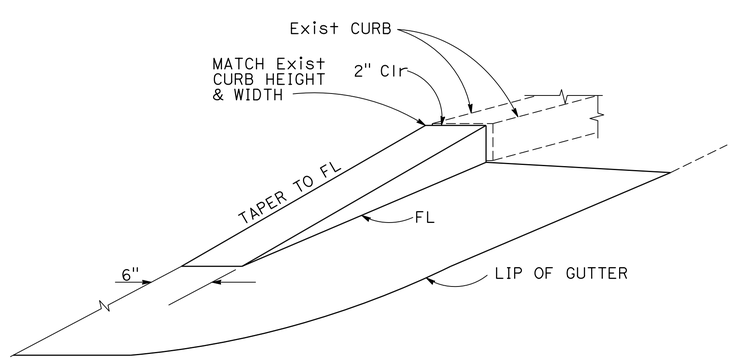

DETAIL A

CONSTRUCTION DETAILS

NO SCALE

C-12

REVISED BY	DATE REVISED
HR	02-16-16

CALCULATED-DESIGNED BY	CHECKED BY
RAY CHANG	DAVID MELIS

FUNCTIONAL SUPERVISOR: CAROLINE REYES

STATE OF CALIFORNIA - DEPARTMENT OF TRANSPORTATION

Caltrans® DESIGN

LAST REVISION 07-15-16 | DATE PLOTTED => 25-JUL-2016 | TIME PLOTTED => 15:13

Dist	COUNTY	ROUTE	POST MILES TOTAL PROJECT	SHEET No.	TOTAL SHEETS
10	SJ	99	0.0/5.7	18	116

David E. Melis 5/2/16
REGISTERED CIVIL ENGINEER DATE

5-2-16
PLANS APPROVAL DATE

REGISTERED PROFESSIONAL ENGINEER
DAVID E MELIS
No. 54383
Exp. 12/31/2017
CIVIL
STATE OF CALIFORNIA

THE STATE OF CALIFORNIA OR ITS OFFICERS OR AGENTS SHALL NOT BE RESPONSIBLE FOR THE ACCURACY OR COMPLETENESS OF SCANNED COPIES OF THIS PLAN SHEET.

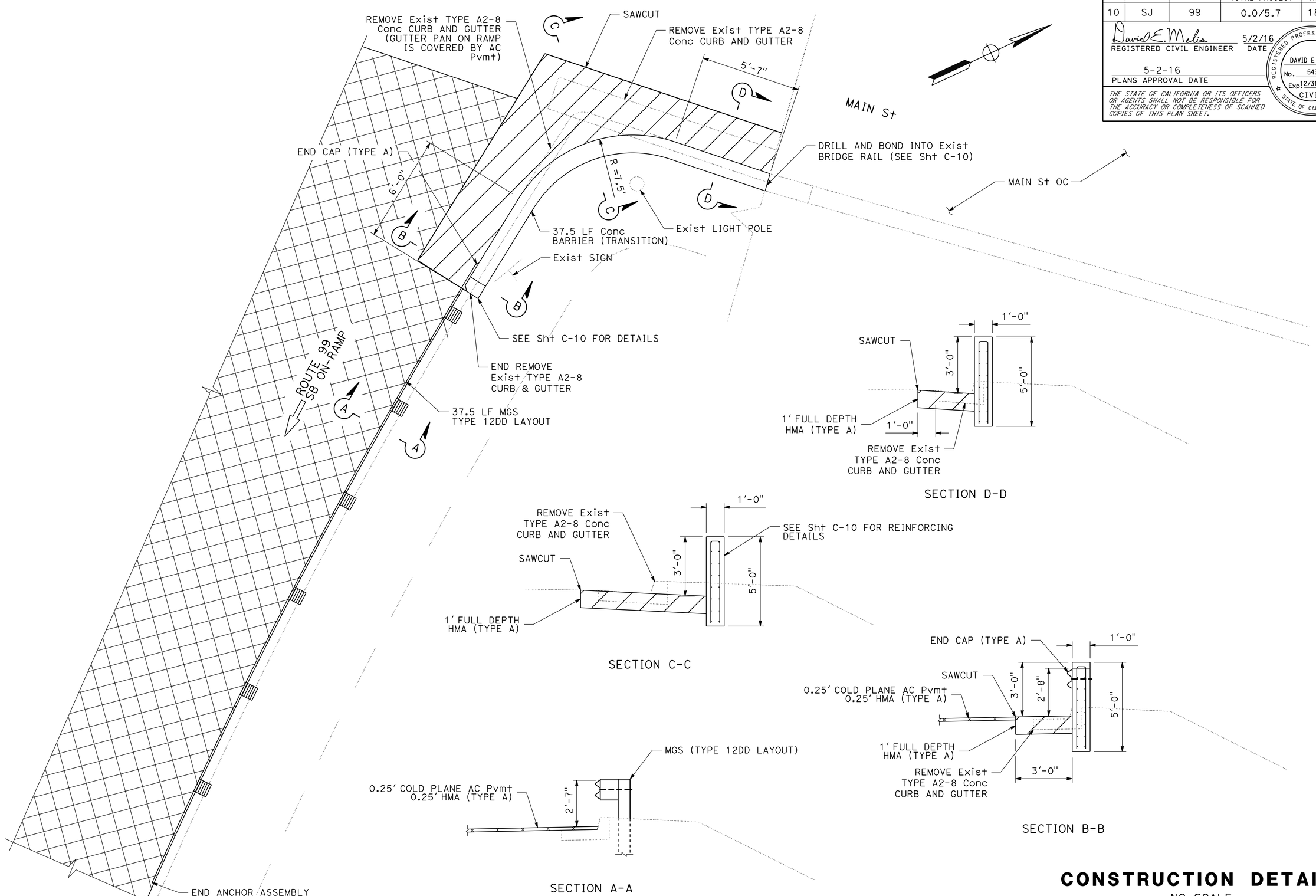

CONSTRUCTION DETAILS

NO SCALE

C-13

REVISED BY	DATE REVISED
DM	04-11-16
DM	02-24-16

RAY CHANG — DAVID MELIS
CALCULATED-DESIGNED BY — CHECKED BY
FUNCTIONAL SUPERVISOR — CAROLINE REYES

STATE OF CALIFORNIA - DEPARTMENT OF TRANSPORTATION
Caltrans® DESIGN

LAST REVISION 07-15-16
DATE PLOTTED => 25-JUL-2016
TIME PLOTTED => 15:13

Dist	COUNTY	ROUTE	POST MILES TOTAL PROJECT	SHEET No.	TOTAL SHEETS
10	SJ	99	0.0/5.7	19	116

David E. Melis 5/2/16
REGISTERED CIVIL ENGINEER DATE

5-2-16
PLANS APPROVAL DATE

REGISTERED PROFESSIONAL ENGINEER
DAVID E MELIS
No. 54383
Exp. 12/31/2017
CIVIL
STATE OF CALIFORNIA

THE STATE OF CALIFORNIA OR ITS OFFICERS OR AGENTS SHALL NOT BE RESPONSIBLE FOR THE ACCURACY OR COMPLETENESS OF SCANNED COPIES OF THIS PLAN SHEET.

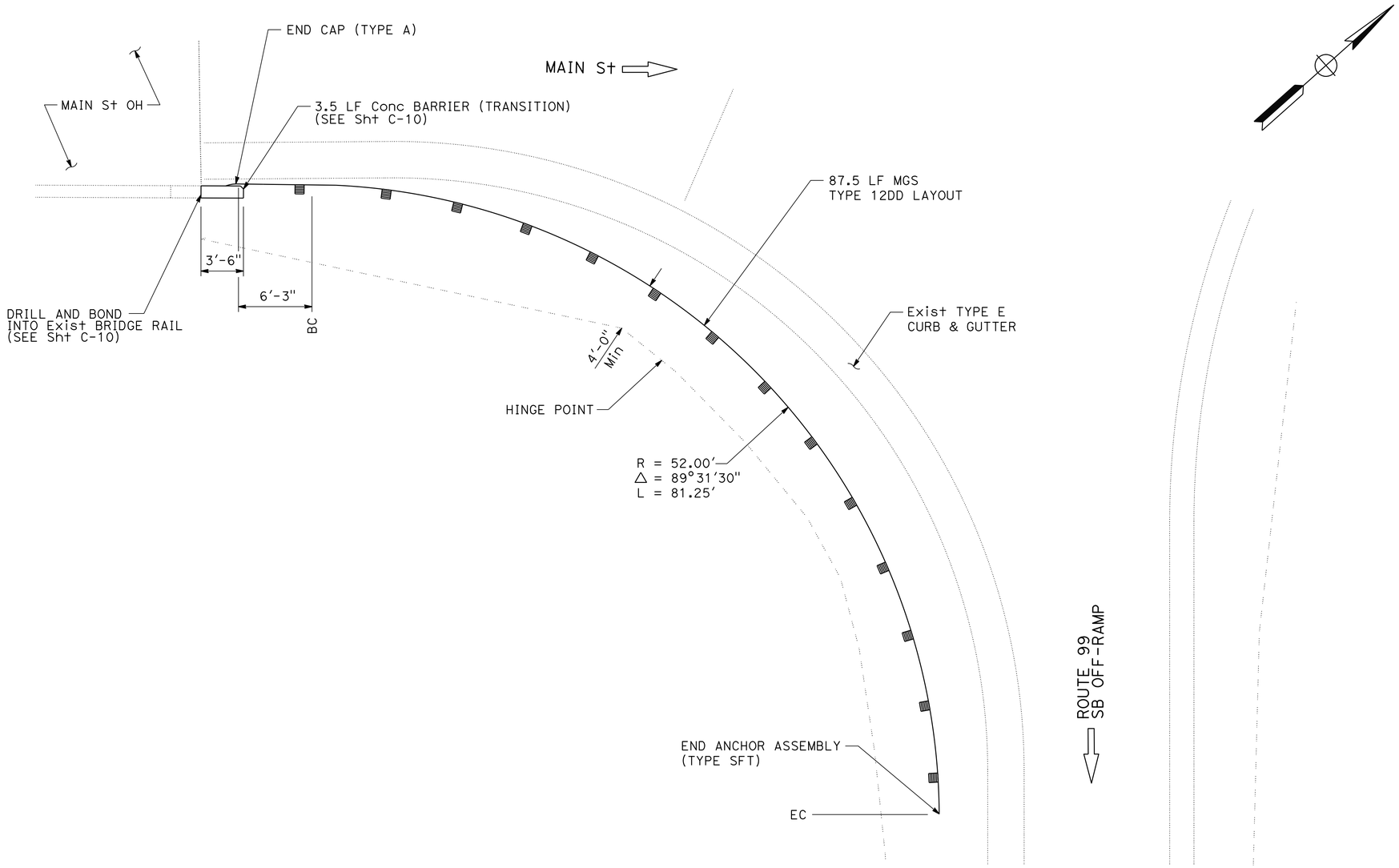

CONSTRUCTION DETAILS

NO SCALE

C-14

REVISED BY	DATE REVISED
DM	04-11-16
DM	02-24-16

DAVID MELIS — CAROLINE REYES

CALCULATED-DESIGNED BY — CHECKED BY

FUNCTIONAL SUPERVISOR: CAROLINE REYES

STATE OF CALIFORNIA - DEPARTMENT OF TRANSPORTATION
Caltrans
DESIGN

LAST REVISION 07-15-16 | DATE PLOTTED => 25-JUL-2016 | TIME PLOTTED => 15:13

Dist	COUNTY	ROUTE	POST MILES TOTAL PROJECT	SHEET No.	TOTAL SHEETS
10	SJ	99	0.0/5.7	20	116

David E. Melis 5/2/16
REGISTERED CIVIL ENGINEER DATE

5-2-16
PLANS APPROVAL DATE

REGISTERED PROFESSIONAL ENGINEER
DAVID E MELIS
No. 54383
Exp. 12/31/2017
CIVIL
STATE OF CALIFORNIA

THE STATE OF CALIFORNIA OR ITS OFFICERS OR AGENTS SHALL NOT BE RESPONSIBLE FOR THE ACCURACY OR COMPLETENESS OF SCANNED COPIES OF THIS PLAN SHEET.

CURVE DATA

No.	R	Δ	T	L
3	52.50′	18°00′00″	17.53′	16.92′
4	40.66′	134°00′00″	30.55′	26.20′

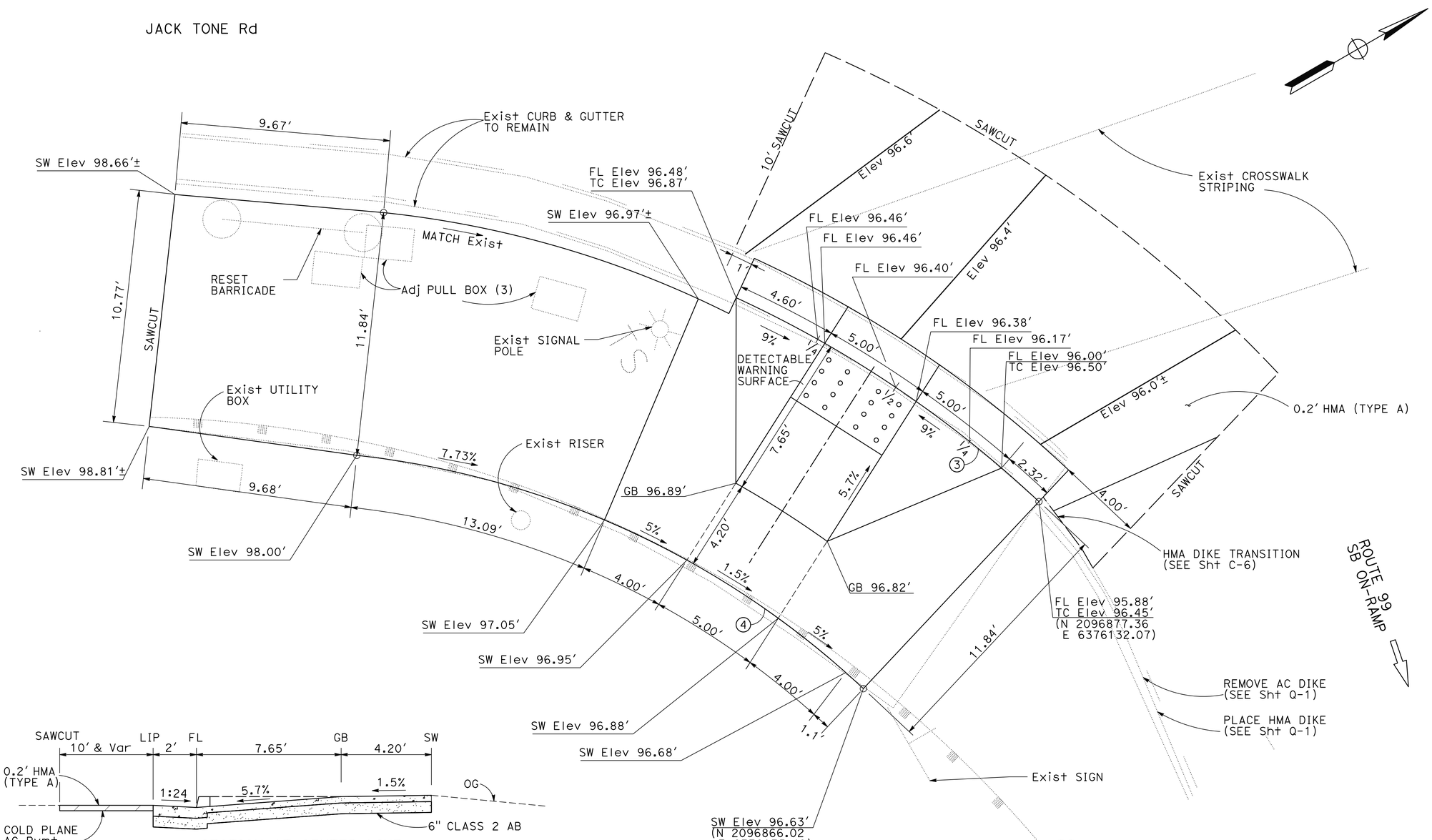

CURB RAMP #3 (CASE A)

CONSTRUCTION DETAILS
NO SCALE

C-15

STATE OF CALIFORNIA - DEPARTMENT OF TRANSPORTATION	Caltrans DESIGN	FUNCTIONAL SUPERVISOR: CAROLINE REYES	CALCULATED-DESIGNED BY: RAY CHANG / CHECKED BY: DAVID MELIS
REVISED BY: HR	DATE REVISED: 02-16-16	REVISED BY: DM	DATE REVISED: 04-11-16

LAST REVISION 07-15-16 | DATE PLOTTED => 25-JUL-2016 | TIME PLOTTED => 15:13

Dist	COUNTY	ROUTE	POST MILES TOTAL PROJECT	SHEET No.	TOTAL SHEETS
10	SJ	99	0.0/5.7	21	116

David E. Melis 5/2/16
REGISTERED CIVIL ENGINEER DATE

5-2-16
PLANS APPROVAL DATE

REGISTERED PROFESSIONAL ENGINEER
DAVID E MELIS
No. 54383
Exp. 12/31/2017
CIVIL
STATE OF CALIFORNIA

THE STATE OF CALIFORNIA OR ITS OFFICERS OR AGENTS SHALL NOT BE RESPONSIBLE FOR THE ACCURACY OR COMPLETENESS OF SCANNED COPIES OF THIS PLAN SHEET.

CURVE DATA

No.	R	Δ	T	L
5	19.68′	16°39′39″	5.89′	5.72′
6	10.10′	53°33′37″	13.68′	9.44′

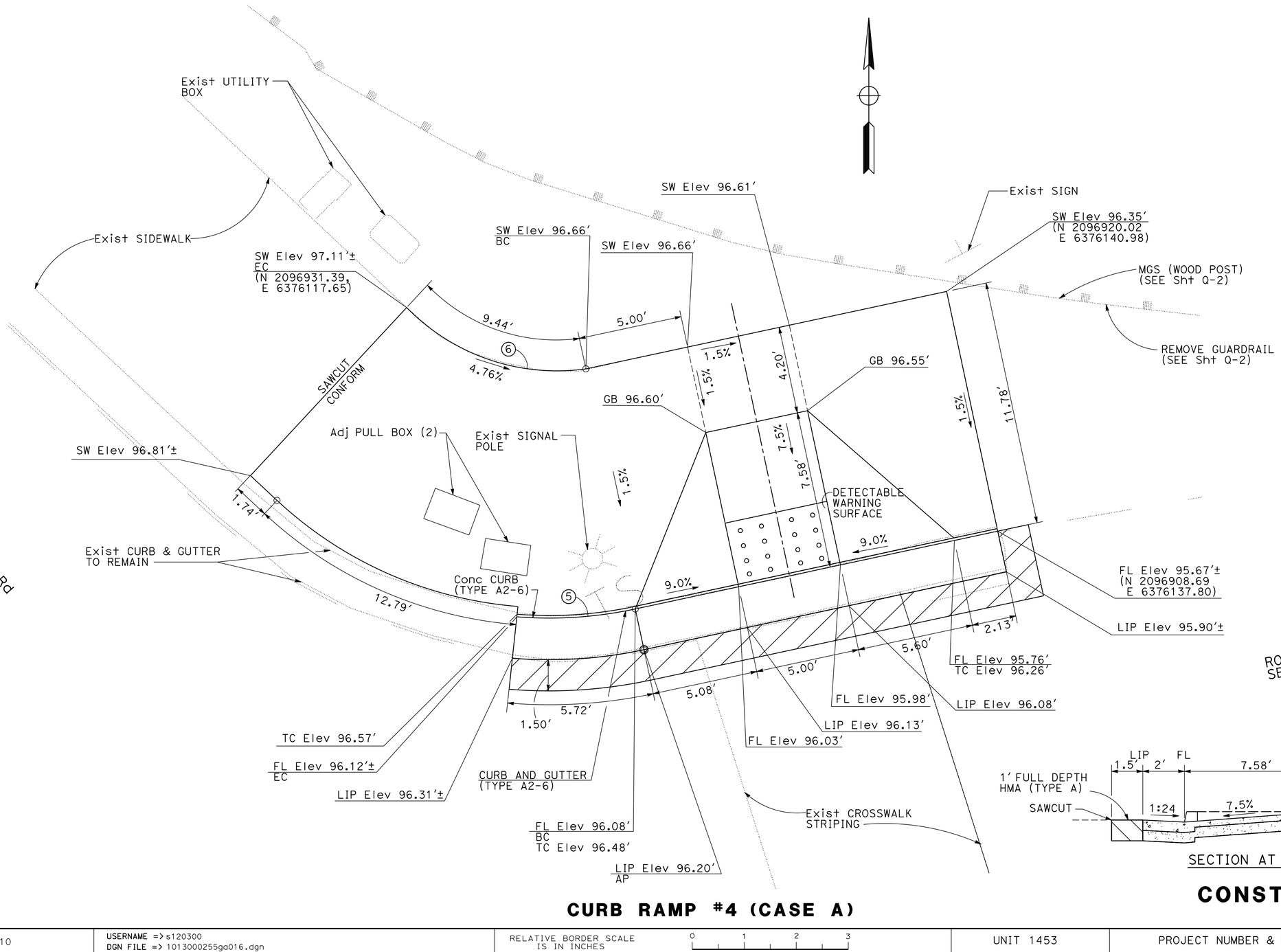

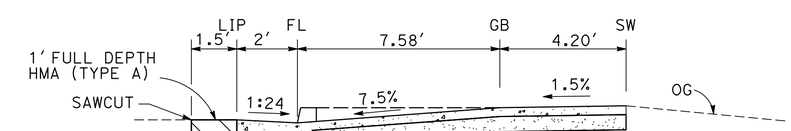

SECTION AT CENTER LINE

CURB RAMP #4 (CASE A)

CONSTRUCTION DETAILS
NO SCALE

C-16

DM	04-11-16	RAY CHANG	CALCULATED-DESIGNED BY	FUNCTIONAL SUPERVISOR	
HR	02-16-16	DAVID MELIS	CHECKED BY	CAROLINE REYES	
REVISED BY	DATE REVISED				

STATE OF CALIFORNIA - DEPARTMENT OF TRANSPORTATION
Caltrans
DESIGN

LAST REVISION 07-15-16
DATE PLOTTED => 25-JUL-2016
TIME PLOTTED => 15:13

Dist	COUNTY	ROUTE	POST MILES TOTAL PROJECT	SHEET No.	TOTAL SHEETS
10	SJ	99	0.0/5.7	22	116

REGISTERED CIVIL ENGINEER 5/2/16 DATE

5-2-16
PLANS APPROVAL DATE

REGISTERED PROFESSIONAL ENGINEER DAVID MELIS No. 54383 Exp 12/31/2017 CIVIL STATE OF CALIFORNIA

THE STATE OF CALIFORNIA OR ITS OFFICERS OR AGENTS SHALL NOT BE RESPONSIBLE FOR THE ACCURACY OR COMPLETENESS OF SCANNED COPIES OF THIS PLAN SHEET.

NOTE (THIS SHEET ONLY):

THE THICKNESS OF THE RHMA-G OVERLAY AT GORE AREAS IS THE SAME AS THE THICKNESS OF THE RHMA-G OVERLAY OF THE ADJACENT MAIN ROUTE, SEE TYPICAL CROSS SECTION SHEETS.

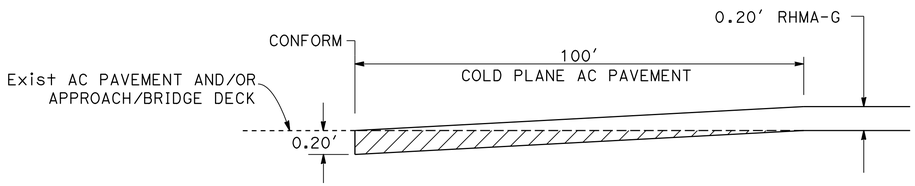

CONFORM TAPER FOR APPROACH/DEPARTURE AT STANISLAUS BRIDGE DECK AND EXISTING PAVEMENT

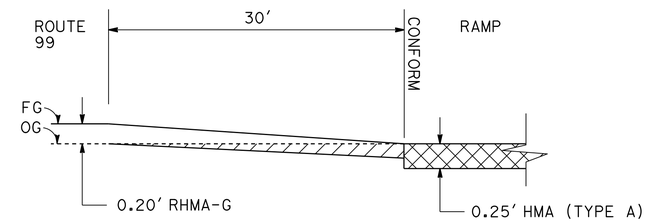

CONFORM TAPERS TO RAMPS

CONFORM TAPER LOCATIONS

Dir	PM	DESCRIPTION
NB	0.20	ROUTE 99 (AT STANISLAUS RIVER Br)
SB	0.20	ROUTE 99 (AT STANISLAUS RIVER Br)
NB	0.65	NB OFF-RAMP AT MAIN St
NB	0.78	NB ON-RAMP AT MAIN St
SB	0.74	SB ON-RAMP AT MAIN St
SB	1.08	SB OFF-RAMP AT MAIN St
NB	1.47	NB OFF-RAMP AT FULTON Ave
NB	1.59	NB ON-RAMP AT FULTON Ave
SB	2.11	SB ON-RAMP AT JACK TONE Rd
NB	2.16	NB OFF-RAMP TO COLONY Rd
NB	2.30	NB ON-RAMP FROM COLONY Rd
NB	2.50	NB ON-RAMP AT JACK TONE Rd
SB	2.58	SB OFF-RAMP AT JACK TONE Rd
SB	4.55	SB ON-RAMP AT AUSTIN Rd
NB	4.79	NB OFF-RAMP AT AUSTIN Rd
NB	5.03	NB ON-RAMP AT AUSTIN Rd
NB	5.60	ROUTE 99

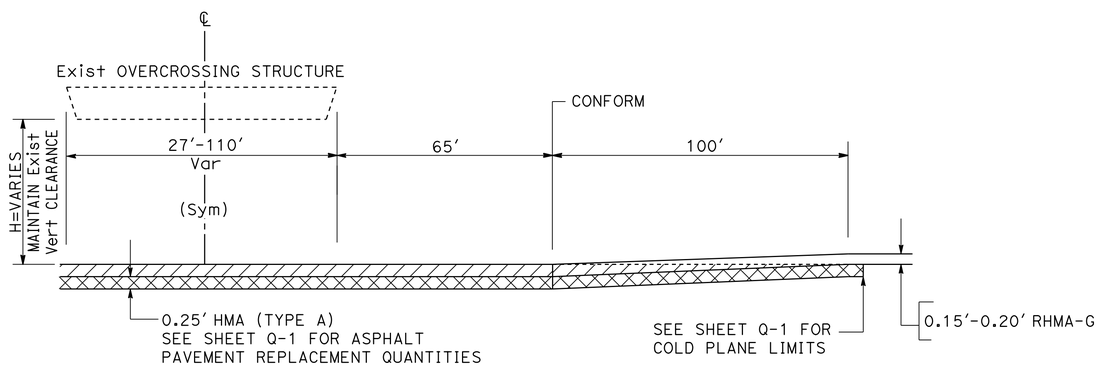

ELEVATION

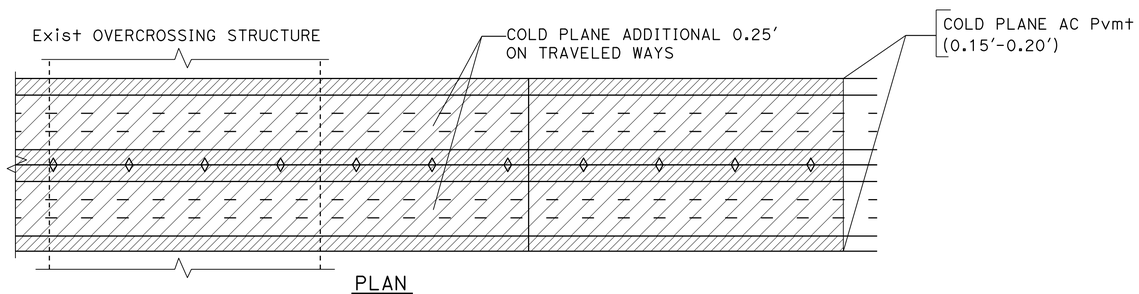

PLAN

LONGITUDINAL TRANSITION TAPER AT OVERCROSSING STRUCTURE

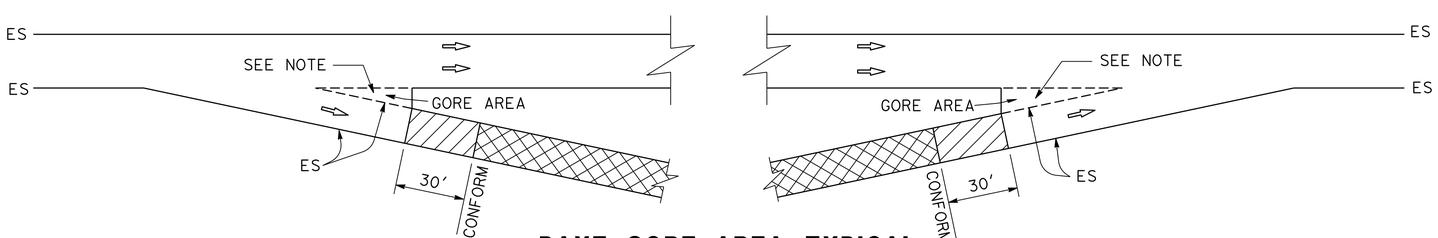

PAVE GORE AREA TYPICAL ON/OFF-RAMPS

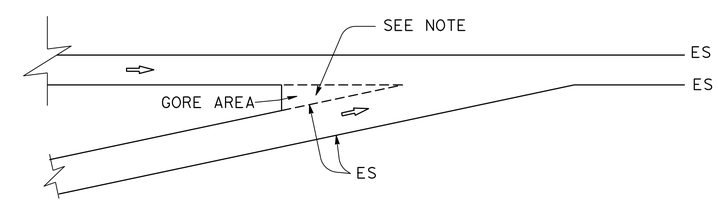

PAVE GORE AREA TWO ON-RAMP MERGE

CONSTRUCTION DETAILS

NO SCALE

C-17

DM	04-11-16	RAY CHANG	DAVID MELIS
HR	02-16-16	CALCULATED-DESIGNED BY	CHECKED BY
REVISED BY	DATE REVISED	FUNCTIONAL SUPERVISOR	CAROLINE REYES

STATE OF CALIFORNIA - DEPARTMENT OF TRANSPORTATION

DESIGN

Caltrans

LAST REVISION 07-15-16

DATE PLOTTED => 25-JUL-2016
TIME PLOTTED => 15:13

Dist	COUNTY	ROUTE	POST MILES TOTAL PROJECT	SHEET No.	TOTAL SHEETS
10	SJ	99	0.0/5.7	23	116

David E. Melis 5/2/16
REGISTERED CIVIL ENGINEER DATE

5-2-16
PLANS APPROVAL DATE

REGISTERED PROFESSIONAL ENGINEER
DAVID E MELIS
No. 54383
Exp. 12/31/2017
CIVIL
STATE OF CALIFORNIA

THE STATE OF CALIFORNIA OR ITS OFFICERS OR AGENTS SHALL NOT BE RESPONSIBLE FOR THE ACCURACY OR COMPLETENESS OF SCANNED COPIES OF THIS PLAN SHEET.

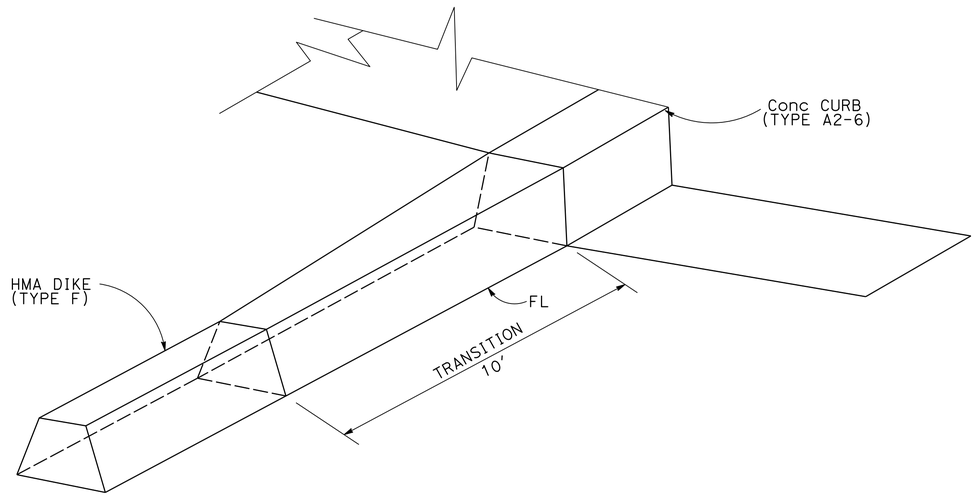

HMA DIKE TRANSITION DETAIL

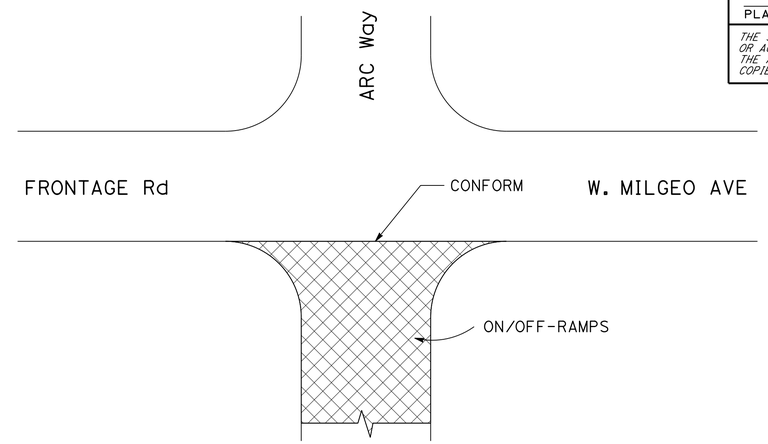

HMA (TYPE A) PAVEMENT LIMITS DETAIL 1

NB ROUTE 99 ON/OFF-RAMPS AT FULTON Ave

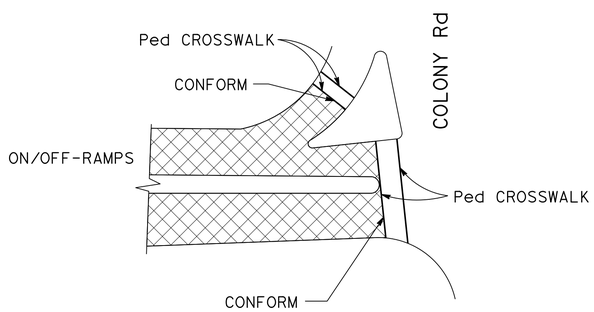

HMA (TYPE A) PAVEMENT LIMITS DETAIL 2

NB ROUTE 99 ON/OFF-RAMPS AT COLONY Rd

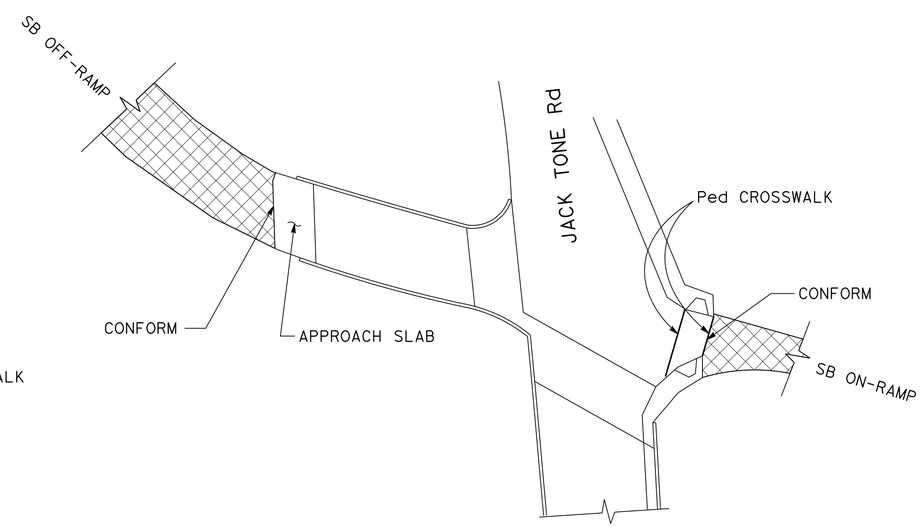

HMA (TYPE A) PAVEMENT LIMITS DETAIL 3

SB ROUTE 99 ON/OFF-RAMPS
AT JACK TONE Rd

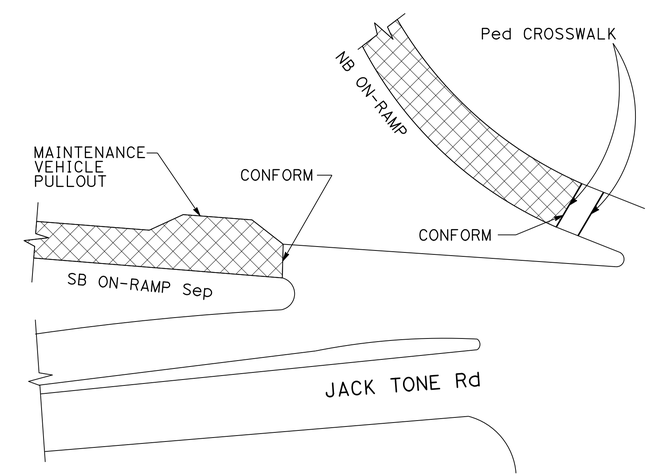

HMA (TYPE A) PAVEMENT LIMITS DETAIL 4

NB ROUTE 99 ON-RAMP
SB ROUTE 99 ON-RAMP Sep
AT JACK TONE Rd

CONSTRUCTION DETAILS

NO SCALE

C-18

DM	06-30-16		
DM	03-11-16		
HR	02-16-16		
REVISED BY	DATE REVISED		
RAY CHANG	DAVID MELIS		
CALCULATED-DESIGNED BY	CHECKED BY		
FUNCTIONAL SUPERVISOR	CAROLINE REYES		

STATE OF CALIFORNIA - DEPARTMENT OF TRANSPORTATION
Caltrans®
DESIGN

LAST REVISION 06-30-16
DATE PLOTTED => 25-JUL-2016
TIME PLOTTED => 15:13

Dist	COUNTY	ROUTE	POST MILES TOTAL PROJECT	SHEET No.	TOTAL SHEETS
10	SJ	99	0.0/5.7	24	116

David E. Melis 5/2/16
REGISTERED CIVIL ENGINEER DATE

5-2-16
PLANS APPROVAL DATE

REGISTERED PROFESSIONAL ENGINEER
DAVID E MELIS
No. 54383
Exp. 12/31/2017
CIVIL
STATE OF CALIFORNIA

THE STATE OF CALIFORNIA OR ITS OFFICERS OR AGENTS SHALL NOT BE RESPONSIBLE FOR THE ACCURACY OR COMPLETENESS OF SCANNED COPIES OF THIS PLAN SHEET.

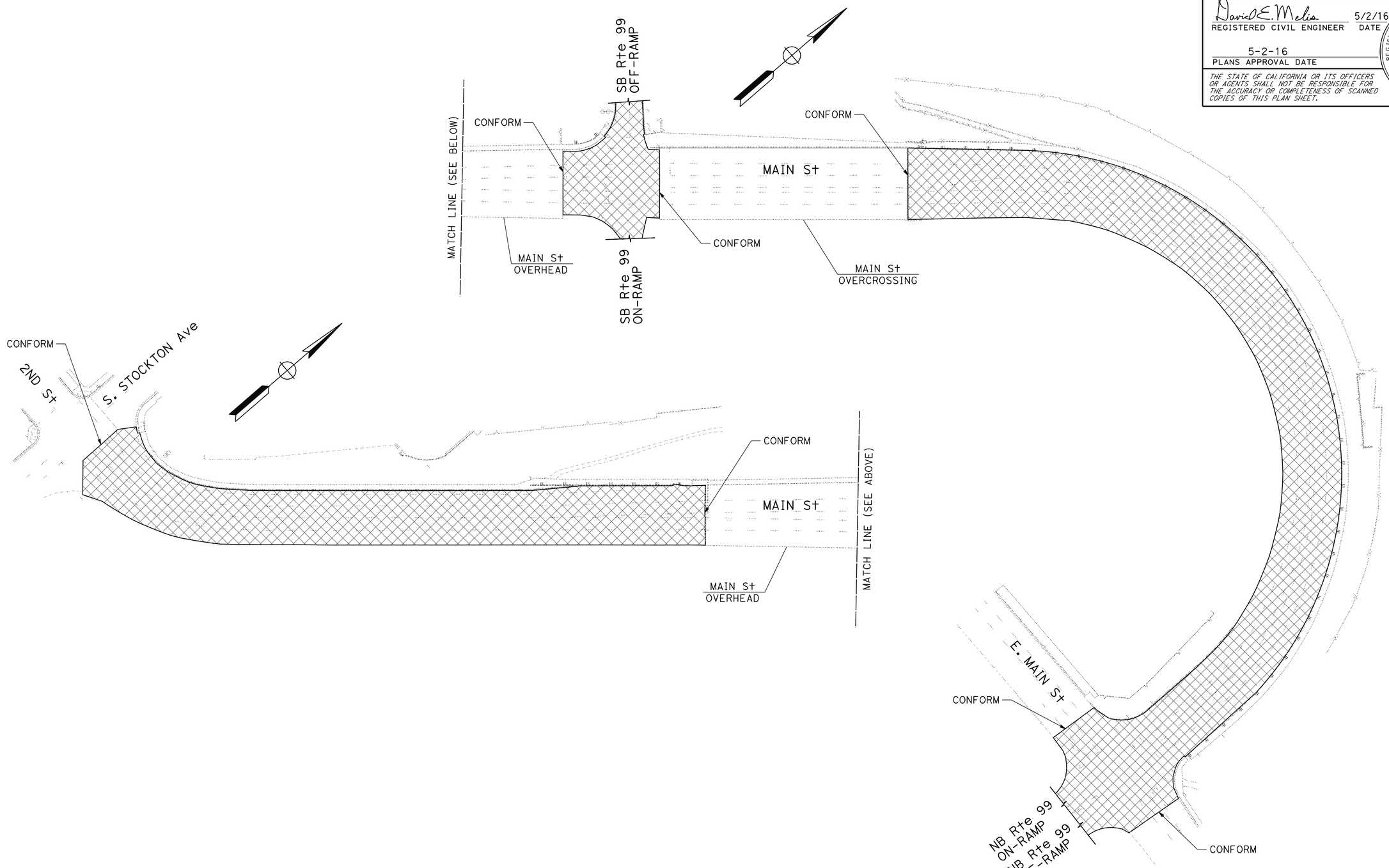

CONSTRUCTION DETAILS

NO SCALE

C-19

REVISED BY	DATE REVISED

DAVID MELIS — CALCULATED-DESIGNED BY
CAROLINE REYES — CHECKED BY
CAROLINE REYES — FUNCTIONAL SUPERVISOR

STATE OF CALIFORNIA - DEPARTMENT OF TRANSPORTATION
Caltrans
DESIGN

LAST REVISION 07-19-16
DATE PLOTTED => 25-JUL-2016
TIME PLOTTED => 15:13

Dist	COUNTY	ROUTE	POST MILES TOTAL PROJECT	SHEET No.	TOTAL SHEETS
10	SJ	99	0.0/5.7	25	116

REGISTERED CIVIL ENGINEER 5/2/16 DATE

5-2-16
PLANS APPROVAL DATE

REGISTERED PROFESSIONAL ENGINEER DAVID E MELIS No. 54383 Exp. 12/31/2017 CIVIL STATE OF CALIFORNIA

THE STATE OF CALIFORNIA OR ITS OFFICERS OR AGENTS SHALL NOT BE RESPONSIBLE FOR THE ACCURACY OR COMPLETENESS OF SCANNED COPIES OF THIS PLAN SHEET.

NOTES (SHEETS C-20 AND C-21 ONLY):

1. RUBBER MAT FOR WEED CONTROL MUST BE 48" WIDE INDIVIDUAL MATS OR 48" WIDE CONTINUOUS ROLL PRODUCT. INDIVIDUAL MATS ARE SHOWN.
2. EDGES OF MAT TO ABUT EDGES OF POST.
3. WHERE EDGE OF PAVED SHOULDER IS MORE THAN 24" FROM BACK OF POST, EDGE OF RUBBER MAT MUST BE 24" FROM BACK OF POST. WHERE PAVED SHOULDER IS CONSTRUCTED 24" OR LESS FROM BACK OF POST, ABUT EDGE OF RUBBER MAT AGAINST EDGE OF PAVED SHOULDER. WHERE DIKE IS CONSTRUCTED UNDER RAILING, ABUT EDGE OF RUBBER MAT AGAINST BACK OF DIKE.
4. LAP RUBBER MATS IN DIRECTION OF WATER FLOW.
5. FOR CONTINUOUS ROLL PRODUCT LOCATE OVERLAP JOINT AT OR BETWEEN MIDSPAN POSTS AS SHOWN.
6. SEE RUBBER MAT UNDER MIDWEST GUARDRAIL SYSTEM FOR ADDITIONAL POST CUTOUT AND OVERLAP JOINT DETAILS.
7. CONTINUE ALIGNMENT OF MAT EDGE AT OFFSET FROM BACK OF POST.

LEGEND (SHEETS C-20 AND C-21 ONLY):

- RUBBER MAT

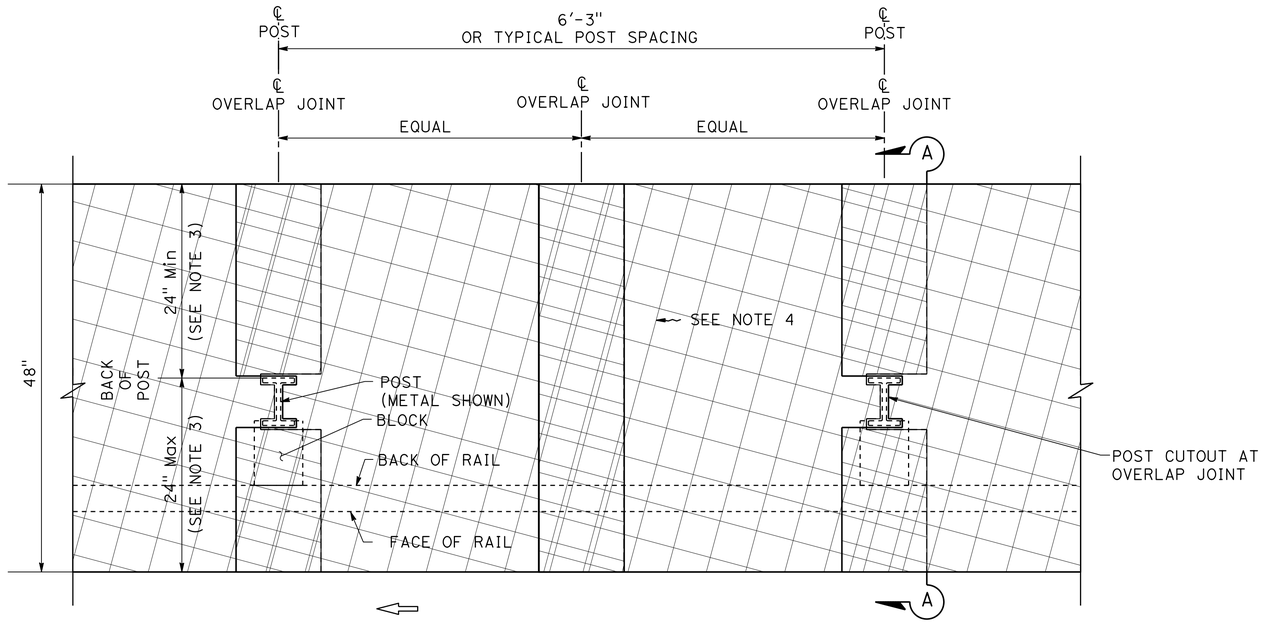

PLAN

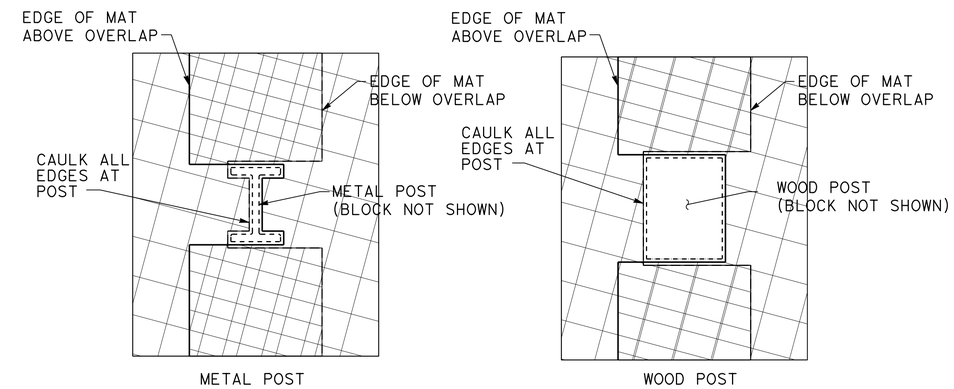

PLAN

POST CUTOUT AT OVERLAP JOINT

(SEE NOTE 2)

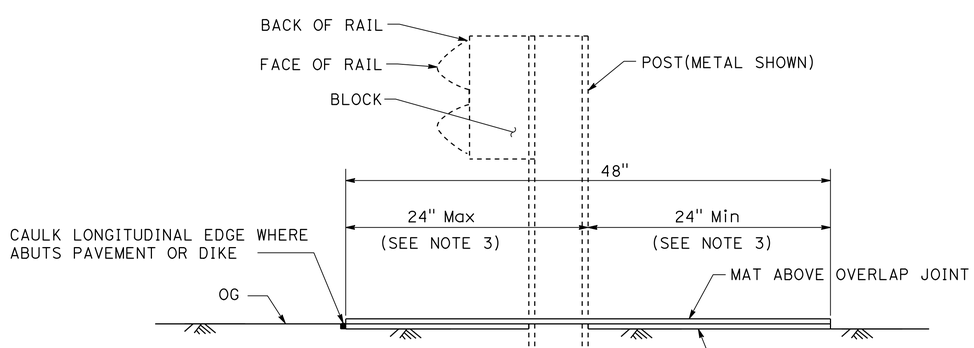

SECTION A-A

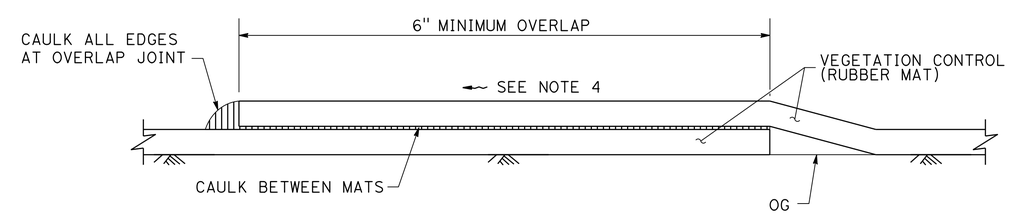

SECTION

OVERLAP JOINT

RUBBER MAT UNDER MIDWEST GUARDRAIL SYSTEM

(SEE NOTE 1)

CONSTRUCTION DETAILS

NO SCALE

C-20

REVISED BY	DATE REVISED
DM	03-18-16
HR	02-16-16

RAY CHANG — DAVID MELIS — CALCULATED-DESIGNED BY — CHECKED BY

FUNCTIONAL SUPERVISOR — CAROLINE REYES

STATE OF CALIFORNIA - DEPARTMENT OF TRANSPORTATION — DESIGN — Caltrans

LAST REVISION 06-30-16 — DATE PLOTTED => 25-JUL-2016 — TIME PLOTTED => 15:13

Dist	COUNTY	ROUTE	POST MILES TOTAL PROJECT	SHEET No.	TOTAL SHEETS
10	SJ	99	0.0/5.7	26	116

David E. Melis 5/2/16
REGISTERED CIVIL ENGINEER DATE

5-2-16
PLANS APPROVAL DATE

REGISTERED PROFESSIONAL ENGINEER
DAVID E MELIS
No. 54383
Exp 12/31/2017
CIVIL
STATE OF CALIFORNIA

THE STATE OF CALIFORNIA OR ITS OFFICERS OR AGENTS SHALL NOT BE RESPONSIBLE FOR THE ACCURACY OR COMPLETENESS OF SCANNED COPIES OF THIS PLAN SHEET.

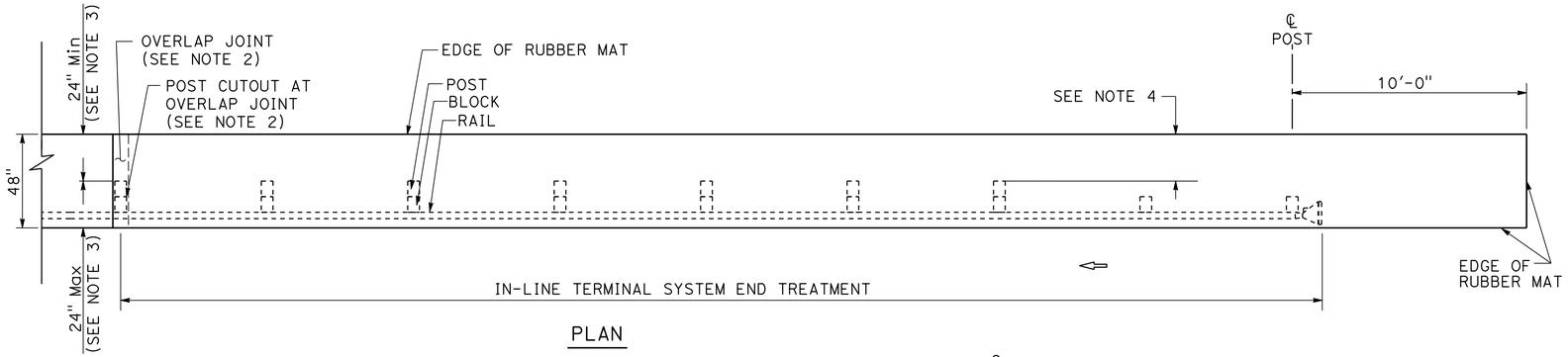

PLAN

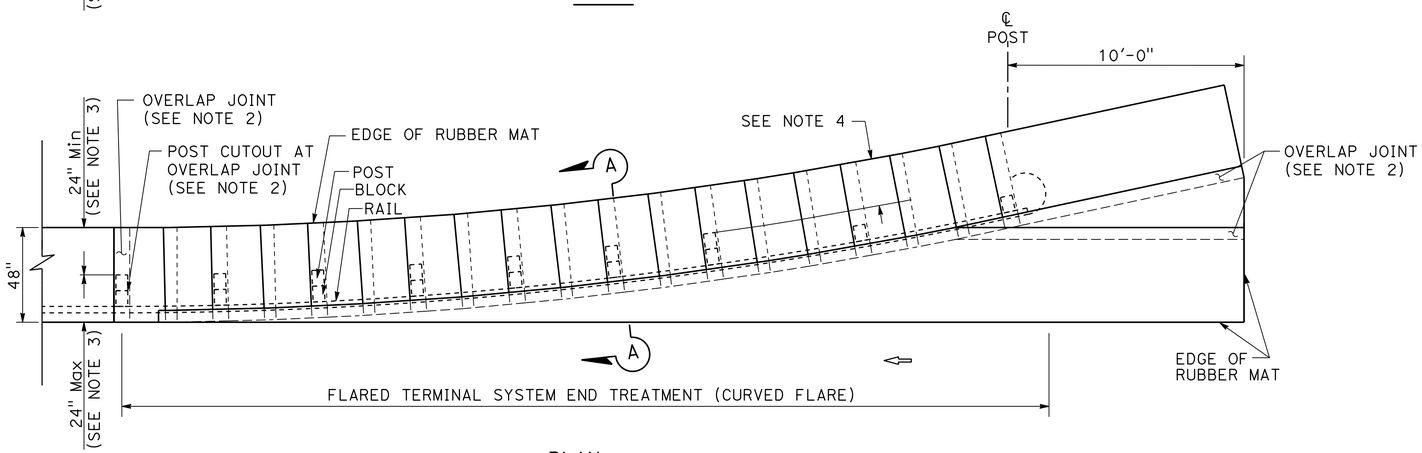

PLAN

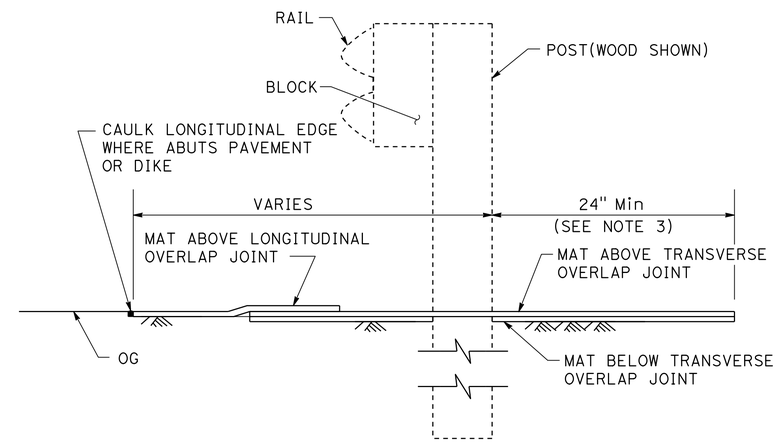

SECTION A-A

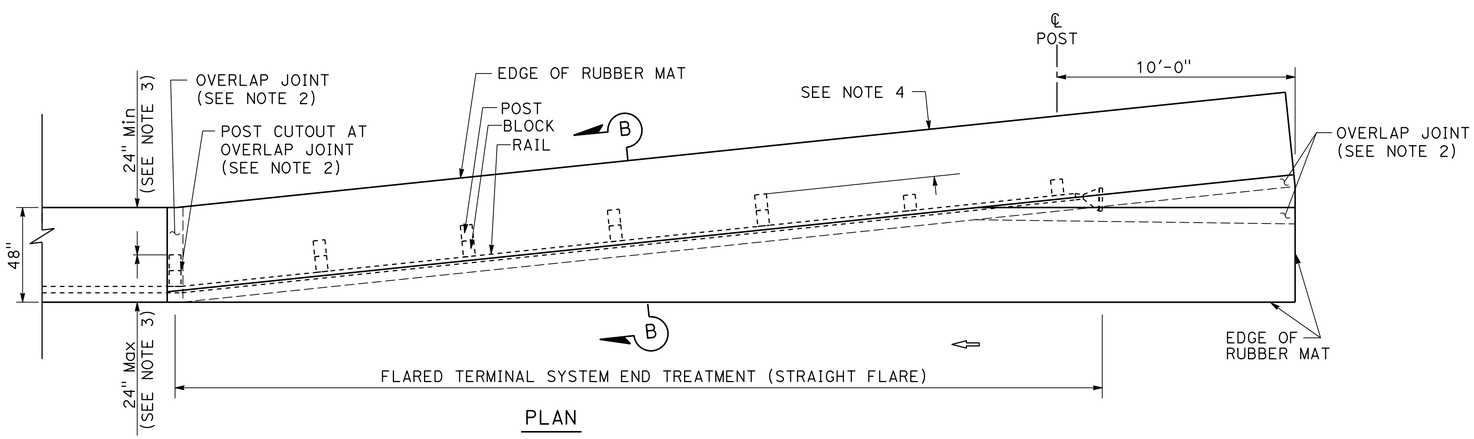

PLAN

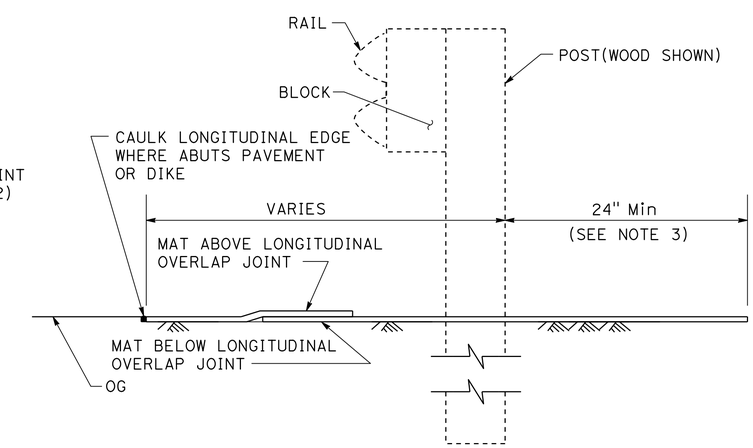

SECTION B-B

RUBBER MAT UNDER TERMINAL SYSTEM END TREATMENTS

CONSTRUCTION DETAILS

NO SCALE

C-21

REVISED BY	DATE REVISED
DM	03-16-16
HR	02-16-16

RAY CHANG — DAVID MELIS
CALCULATED-DESIGNED BY — CHECKED BY
FUNCTIONAL SUPERVISOR — CAROLINE REYES

STATE OF CALIFORNIA - DEPARTMENT OF TRANSPORTATION
DESIGN
Caltrans

LAST REVISION OG-30-16
DATE PLOTTED => 25-JUL-2016
TIME PLOTTED => 15:13

Dist	COUNTY	ROUTE	POST MILES TOTAL PROJECT	SHEET No.	TOTAL SHEETS
10	SJ	99	0.0/5.7	27	116

David E. Melis 5/2/16
REGISTERED CIVIL ENGINEER DATE

5-2-16
PLANS APPROVAL DATE

REGISTERED PROFESSIONAL ENGINEER
DAVID E MELIS
No. 54383
Exp. 12/31/2017
CIVIL
STATE OF CALIFORNIA

THE STATE OF CALIFORNIA OR ITS OFFICERS OR AGENTS SHALL NOT BE RESPONSIBLE FOR THE ACCURACY OR COMPLETENESS OF SCANNED COPIES OF THIS PLAN SHEET.

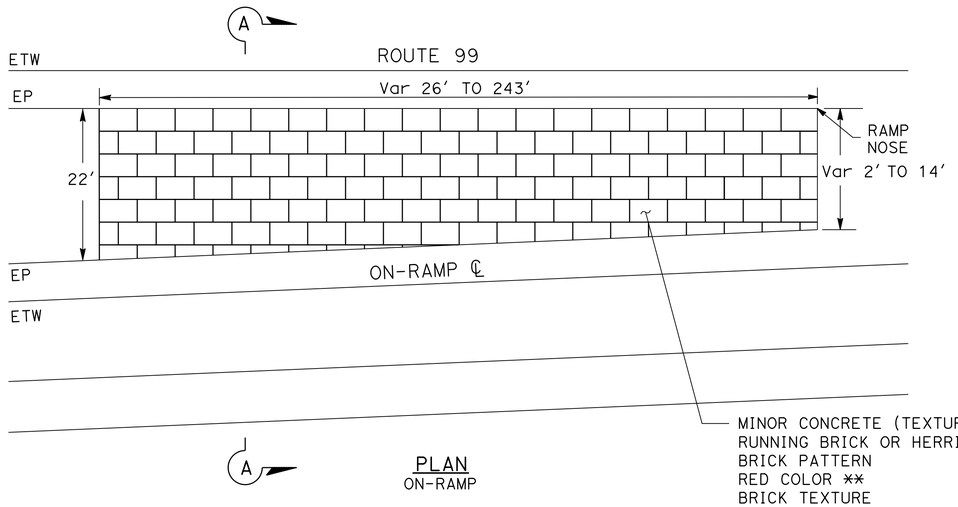

** COLOR HARDENER TO INCLUDE TERRA COTTA COLOR HARDENER
(CLOSE TO FEDERAL STANDARD 595C COLOR 30117)
AND BRICK RED RELEASE AGENT
(CLOSE TO FEDERAL STANDARD 595C COLOR 30166)

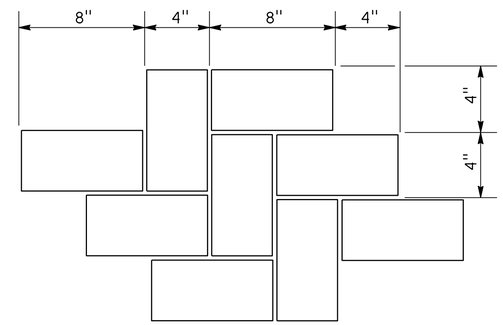

MINOR CONCRETE (TEXTURED PAVING)
HERRINGBONE BRICK PATTERN DETAIL

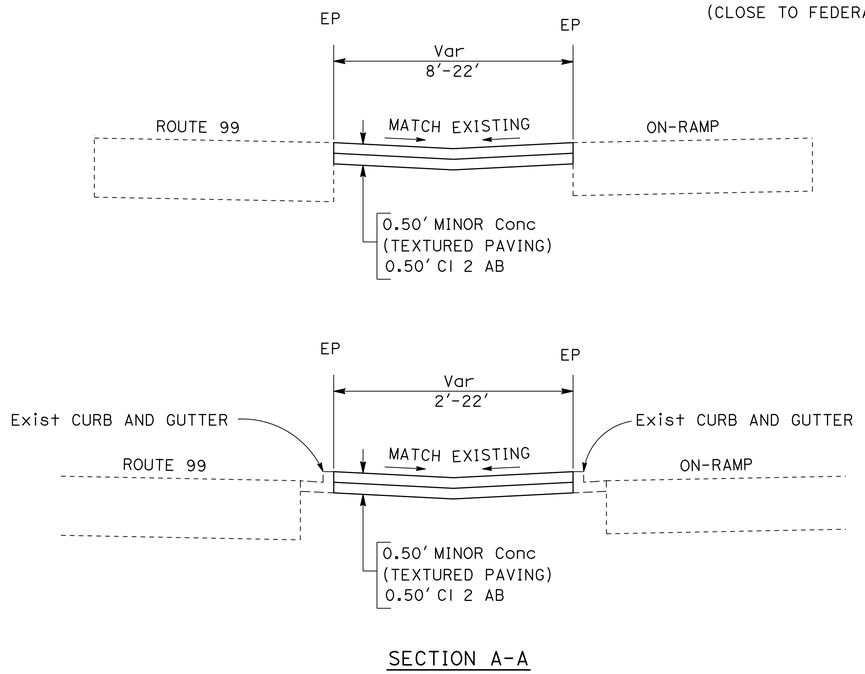

MINOR CONCRETE (TEXTURED PAVING)

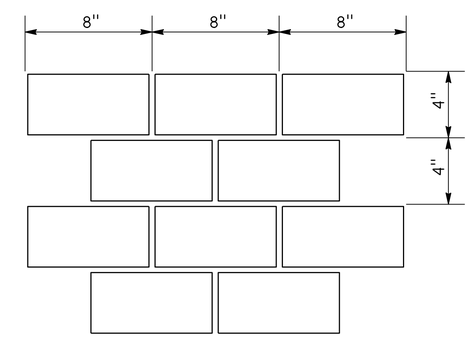

MINOR CONCRETE (TEXTURED PAVING)
RUNNING BOND BRICK PATTERN DETAIL

CONSTRUCTION DETAILS
NO SCALE

C-22

DM	DM	HR
04-26-16	03-16-16	02-16-16

REVISED BY — DATE REVISED

RAY CHANG — DAVID MELIS

CALCULATED-DESIGNED BY — CHECKED BY

FUNCTIONAL SUPERVISOR — CAROLINE REYES

STATE OF CALIFORNIA - DEPARTMENT OF TRANSPORTATION
Caltrans
DESIGN

LAST REVISION 06-30-16
DATE PLOTTED => 25-JUL-2016
TIME PLOTTED => 15:13

Dist	COUNTY	ROUTE	POST MILES TOTAL PROJECT	SHEET No.	TOTAL SHEETS
10	SJ	99	0.0/5.7	28	116

REGISTERED CIVIL ENGINEER 5/2/16 DATE

5-2-16
PLANS APPROVAL DATE

REGISTERED PROFESSIONAL ENGINEER
DAVID E MELIS
No. 54383
Exp. 12/31/2017
CIVIL
STATE OF CALIFORNIA

THE STATE OF CALIFORNIA OR ITS OFFICERS OR AGENTS SHALL NOT BE RESPONSIBLE FOR THE ACCURACY OR COMPLETENESS OF SCANNED COPIES OF THIS PLAN SHEET.

NOTES:

1. FOR ACCURATE RIGHT OF WAY DATA, CONTACT RIGHT OF WAY ENGINEERING AT THE DISTRICT OFFICE
2. REFERENCE POINTS OF DRAINAGE INLETS ARE IN THE MIDDLE OF THE GRATE.
3. FOR ADJUST INLET TO GRADE, REMOVE CONCRETE (GUTTER DEPRESSION) AND MINOR CONCRETE (GUTTER DEPRESSION) NOT SHOWN ON PLANS, SEE DQ SHEET FOR LOCATIONS.
4. CONTRACTOR NEEDS TO APPLY ADDITIONAL 0.10′ DEPRESSION ON THE GRATE ELEVATIONS.

ABBREVIATIONS:

TG - TOP OF GRATE

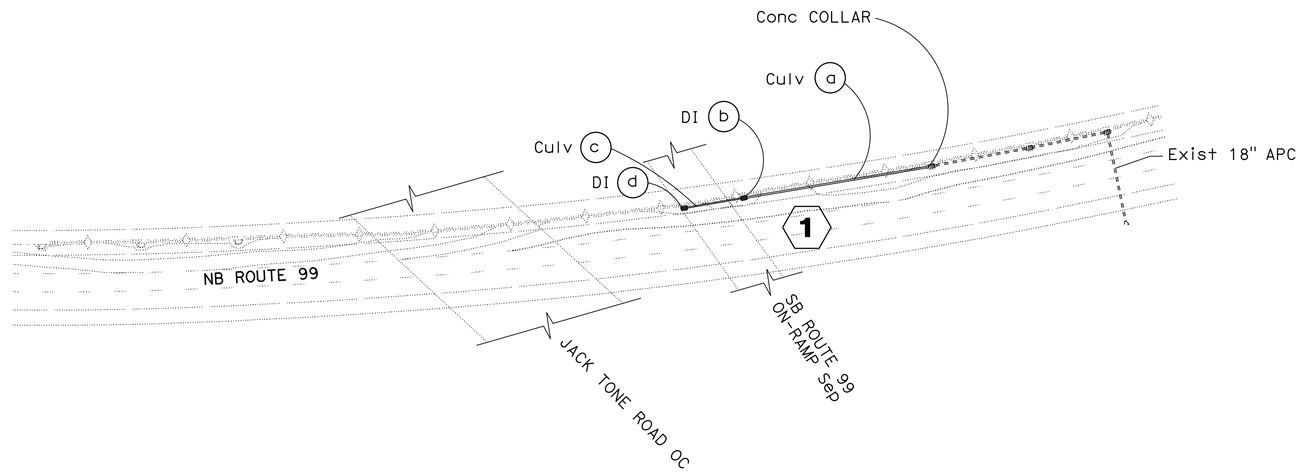

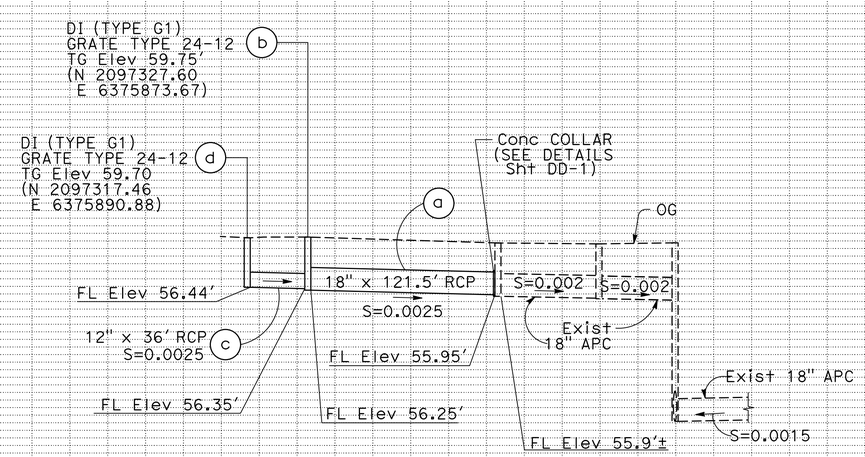

DRAINAGE SYSTEM No. 1

DRAINAGE PLAN AND PROFILES

SCALE: Horiz 1" = 50′
Vert 1" = 5′

D-1

REVISED BY	DATE REVISED
HR	02-17-16

CALCULATED-DESIGNED BY: RAY CHANG
CHECKED BY: DAVID MELIS
FUNCTIONAL SUPERVISOR: CAROLINE REYES

STATE OF CALIFORNIA - DEPARTMENT OF TRANSPORTATION
Caltrans
DESIGN

LAST REVISION 07-15-16
DATE PLOTTED => 25-JUL-2016
TIME PLOTTED => 15:13

Dist	COUNTY	ROUTE	POST MILES TOTAL PROJECT	SHEET No.	TOTAL SHEETS
10	SJ	99	0.0/5.7	29	116

David E. Melis 5/2/16
REGISTERED CIVIL ENGINEER DATE

5-2-16
PLANS APPROVAL DATE

REGISTERED PROFESSIONAL ENGINEER
DAVID E MELIS
No. 54383
Exp 12/31/2015
CIVIL
STATE OF CALIFORNIA

THE STATE OF CALIFORNIA OR ITS OFFICERS OR AGENTS SHALL NOT BE RESPONSIBLE FOR THE ACCURACY OR COMPLETENESS OF SCANNED COPIES OF THIS PLAN SHEET.

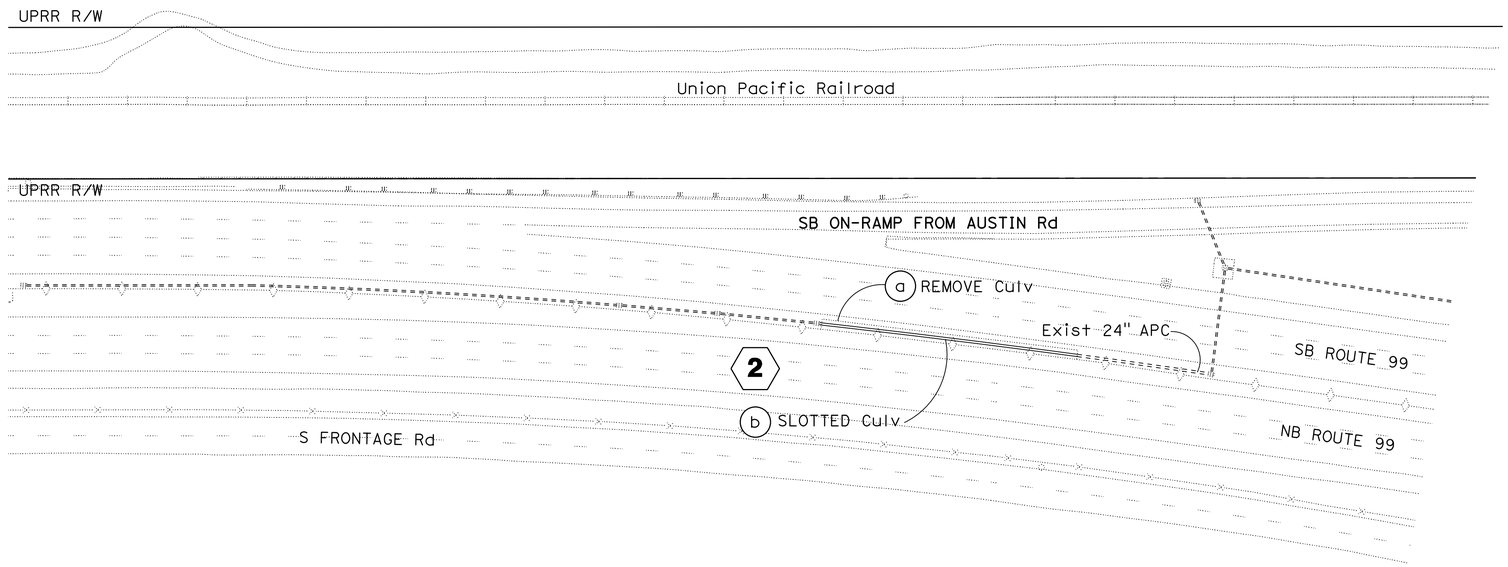

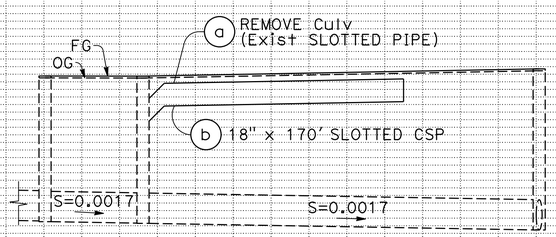

DRAINAGE SYSTEM No. 2

DRAINAGE PLAN AND PROFILES

SCALE: Horiz 1" = 50'
Vert 1" = 5'

D-2

REVISED BY	HR
DATE REVISED	02-17-16
RAY CHANG	
DAVID MELIS	
CALCULATED-DESIGNED BY	
CHECKED BY	
FUNCTIONAL SUPERVISOR	
CAROLINE REYES	

STATE OF CALIFORNIA - DEPARTMENT OF TRANSPORTATION
Caltrans
DESIGN

LAST REVISION 07-15-16
DATE PLOTTED => 25-JUL-2016
TIME PLOTTED => 15:13

Dist	COUNTY	ROUTE	POST MILES TOTAL PROJECT	SHEET No.	TOTAL SHEETS
10	SJ	99	0.0/5.7	30	116

David E. Melis 5/2/16
REGISTERED CIVIL ENGINEER DATE

5-2-16
PLANS APPROVAL DATE

REGISTERED PROFESSIONAL ENGINEER
DAVID E MELIS
No. 54383
Exp 12/31/2017
CIVIL
STATE OF CALIFORNIA

THE STATE OF CALIFORNIA OR ITS OFFICERS OR AGENTS SHALL NOT BE RESPONSIBLE FOR THE ACCURACY OR COMPLETENESS OF SCANNED COPIES OF THIS PLAN SHEET.

NOTE:

FOR MORE DETAILS OF ADJUST INLET, SEE REVISED STANDARD PLAN D73.

LEGEND:

- MINOR CONCRETE

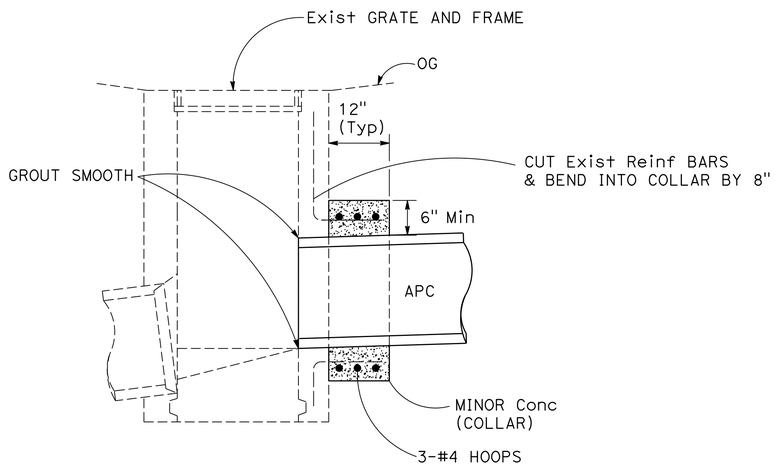

SECTION

1 CONCRETE COLLAR

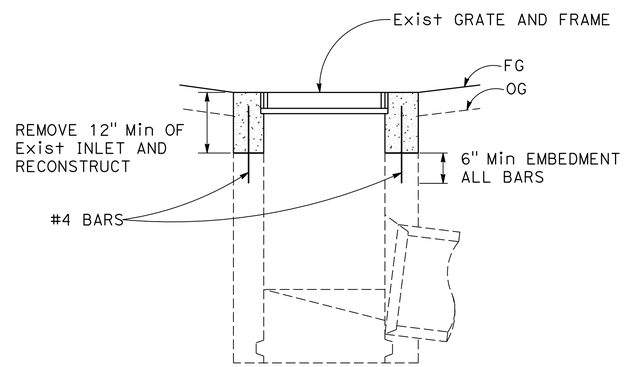

SECTION
Exist DI (TYPE G1)

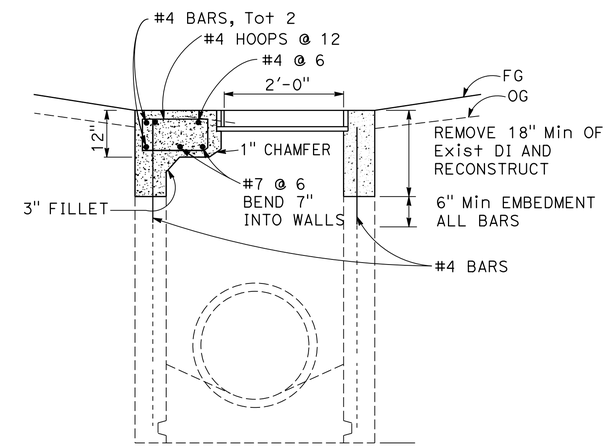

SECTION
Exist DI (TYPE G2)

3 ADJUST INLET

DRAINAGE DETAILS
NO SCALE
DD-1

REVISED BY	DATE REVISED
HR	02-17-16

RAY CHANG — CALCULATED-DESIGNED BY
DAVID MELIS — CHECKED BY
CAROLINE REYES — FUNCTIONAL SUPERVISOR

STATE OF CALIFORNIA - DEPARTMENT OF TRANSPORTATION
Caltrans
DESIGN

LAST REVISION 07-15-16
DATE PLOTTED => 25-JUL-2016
TIME PLOTTED => 15:13

Dist	COUNTY	ROUTE	POST MILES TOTAL PROJECT	SHEET No.	TOTAL SHEETS
10	SJ	99	0.0/5.7	31	116

REGISTERED CIVIL ENGINEER 5/2/16 DATE

5-2-16
PLANS APPROVAL DATE

REGISTERED PROFESSIONAL ENGINEER
DAVID E MELIS
No. 54383
Exp. 12/31/2017
CIVIL
STATE OF CALIFORNIA

THE STATE OF CALIFORNIA OR ITS OFFICERS OR AGENTS SHALL NOT BE RESPONSIBLE FOR THE ACCURACY OR COMPLETENESS OF SCANNED COPIES OF THIS PLAN SHEET.

NOTE:

1. (N) - NOT A SEPARATE PAY ITEM, FOR INFORMATION ONLY.
2. * - QUANTITIES INCLUDED IN CONCRETE TABLE ON SUMMARY QUANTITIES SHEET C-3.

DRAINAGE QUANTITIES

DRAINAGE SHEET No.	DRAINAGE SYSTEM No. ⬡	DRAINAGE UNIT ○	REMOVE CULVERT LF	12" RCP LF	18" RCP LF	18" SLOTTED CORRUGATED STEEL PIPE (.064" THICK) LF	Misc IRON AND STEEL LB	MINOR CONCRETE (MINOR STRUCTURE) CY	HEIGHT OF INLET (N) LF	HEIGHT OF COVER (N) LF	DESCRIPTION	DRAINAGE SHEET No. ⬡	DRAINAGE UNIT ○
D-1	1	a			122			0.20		2.0	18" RCP & CONCRETE COLLAR	1	a
		b					326	1.06	3.50		G1 INLET, GRATE TYPE 24-12		b
		c		36						2.3	12" RCP		c
D-1	1	d					326	1.01	3.26		G1 INLET, GRATE TYPE 24-12	1	d
D-2	2	a	170								REMOVE CULVERT	2	a
D-2	2	b				170					18" SLOTTED CSP	2	b
TOTAL			170	36	122	170	652	2.27					

GUTTER DEPRESSION QUANTITIES

POST MILE	DIRECTION	LOCATION	REMOVE CONCRETE CY	MINOR CONCRETE (GUTTER DEPRESSION) CY	DESCRIPTION
1.96	SB	Med	4.36		REMOVE CONCRETE (GUTTER DEPRESSION)
1.98	SB	Med	1.49		REMOVE CONCRETE (GUTTER DEPRESSION)
2.01	SB	Med	1.49		REMOVE CONCRETE (GUTTER DEPRESSION)
2.06	SB	Med	1.49		REMOVE CONCRETE (GUTTER DEPRESSION)
4.10	SB	Med	1.49		REMOVE CONCRETE (GUTTER DEPRESSION)
4.11	SB	Med	4.36		REMOVE CONCRETE (GUTTER DEPRESSION)
4.12	SB	Med	1.49		REMOVE CONCRETE (GUTTER DEPRESSION)
4.14	SB	Med	1.49		REMOVE CONCRETE (GUTTER DEPRESSION)
1.96	SB	Med		4.36	MINOR CONCRETE (GUTTER DEPRESSION) (SEE Std PLAN D78C FOR GRATE INLET SERIES)
1.98	SB	Med		1.49	MINOR CONCRETE (GUTTER DEPRESSION)
2.01	SB	Med		1.49	MINOR CONCRETE (GUTTER DEPRESSION)
2.06	SB	Med		1.49	MINOR CONCRETE (GUTTER DEPRESSION)
4.10	SB	Med		1.49	MINOR CONCRETE (GUTTER DEPRESSION)
4.11	SB	Med		4.36	MINOR CONCRETE (GUTTER DEPRESSION)
4.12	SB	Med		1.49	MINOR CONCRETE (GUTTER DEPRESSION)
4.14	SB	Med		1.49	MINOR CONCRETE (GUTTER DEPRESSION)
TOTAL			17.66*	17.66	

DRAINAGE QUANTITIES
DQ-1

DM	05-04-16	CALCULATED-DESIGNED BY	RAY CHANG
HR	02-17-16	CHECKED BY	DAVID MELIS
REVISED BY		FUNCTIONAL SUPERVISOR	CAROLINE REYES
DATE REVISED			

STATE OF CALIFORNIA - DEPARTMENT OF TRANSPORTATION
Caltrans
DESIGN

LAST REVISION 07-15-16
DATE PLOTTED => 25-JUL-2016
TIME PLOTTED => 15:13

Dist	COUNTY	ROUTE	POST MILES TOTAL PROJECT	SHEET No.	TOTAL SHEETS
10	SJ	99	0.0/5.7	32	116

REGISTERED CIVIL ENGINEER 5/2/16 DATE

5-2-16
PLANS APPROVAL DATE

REGISTERED PROFESSIONAL ENGINEER DAVID E MELIS No. 54383 Exp. 12/31/2017 CIVIL STATE OF CALIFORNIA

THE STATE OF CALIFORNIA OR ITS OFFICERS OR AGENTS SHALL NOT BE RESPONSIBLE FOR THE ACCURACY OR COMPLETENESS OF SCANNED COPIES OF THIS PLAN SHEET.

ADJUST INLET QUANTITIES

POST MILE	DIRECTION	LOCATION	ADJUST INLET EA	DESCRIPTION
0.23	NB	Med	1	ADJUST INLET (Exist G1 INLET)
0.23	SB	Med	1	ADJUST INLET (Exist G1 INLET)
0.85	SB	Shld	1	ADJUST INLET (Exist G1 INLET)
0.86	NB	Med	1	ADJUST INLET (Exist G1 INLET)
0.87	NB	Med	1	ADJUST INLET (Exist G1 INLET)
0.92	SB	Shld	1	ADJUST INLET (Exist G1 INLET)
0.92	NB	Med	1	ADJUST INLET (Exist G1 INLET)
0.93	NB	Med	1	ADJUST INLET (Exist G1 INLET)
0.95	NB	Med	1	ADJUST INLET (Exist G1 INLET)
0.99	SB	Shld	1	ADJUST INLET (Exist G1 INLET)
1.27	NB	Med	1	ADJUST INLET (Exist G1 INLET)
1.27	SB	Med	1	ADJUST INLET (Exist G1 INLET)
1.28	SB	Med	1	ADJUST INLET (Exist G1 INLET)
1.96	SB	Med	1	ADJUST INLET (Exist G1 INLET)
1.97	SB	Med	1	ADJUST INLET (Exist G1 INLET)
1.98	SB	Med	1	ADJUST INLET (Exist G1 INLET)
2.00	SB	Med	1	ADJUST INLET (Exist G1 INLET)
2.03	SB	Med	1	ADJUST INLET (Exist G1 INLET)
2.04	SB	Med	1	ADJUST INLET (Exist G1 INLET)
2.05	SB	Med	1	ADJUST INLET (Exist G1 INLET)
2.06	SB	Med	1	ADJUST INLET (Exist G1 INLET)
2.10	SB	Med	1	ADJUST INLET (Exist G1 INLET)
2.14	SB	Med	1	ADJUST INLET (Exist G1 INLET)
2.21	NB	Med	1	ADJUST INLET (Exist G1 INLET)
2.30	NB	Med	1	ADJUST INLET (Exist G1 INLET)
2.31	NB	Med	1	ADJUST INLET (Exist G1 INLET)
2.32	NB	Med	1	ADJUST INLET (Exist G1 INLET)
2.32	NB	MVP	1	ADJUST INLET (Exist G1 INLET)
2.41	NB	Med	1	ADJUST INLET (Exist G1 INLET)
2.43	NB	Med	1	ADJUST INLET (Exist G1 INLET)
2.44	NB	Med	1	ADJUST INLET (Exist G1 INLET)
2.53	NB	Med	1	ADJUST INLET (Exist G1 INLET)
2.62	SB	Med	1	ADJUST INLET (Exist G1 INLET)
SUBTOTAL A			33	

ADJUST INLET QUANTITIES

POST MILE	DIRECTION	LOCATION	ADJUST INLET EA	DESCRIPTION
2.71	SB	Med	1	ADJUST INLET (Exist G1 INLET)
2.80	NB	Med	1	ADJUST INLET (Exist G1 INLET)
2.80	SB	Med	1	ADJUST INLET (Exist G1 INLET)
2.86	SB	Med	1	ADJUST INLET (Exist G1 INLET)
2.92	NB	Med	1	ADJUST INLET (Exist G1 INLET)
2.92	SB	Med	1	ADJUST INLET (Exist G1 INLET)
2.99	NB	Med	1	ADJUST INLET (Exist G1 INLET)
2.99	SB	Med	1	ADJUST INLET (Exist G1 INLET)
3.01	NB	Med	1	ADJUST INLET (Exist G1 INLET)
3.01	SB	Med	1	ADJUST INLET (Exist G1 INLET)
3.93	NB	Med	1	ADJUST INLET (Exist G1 INLET)
3.93	SB	Med	1	ADJUST INLET (Exist G1 INLET)
3.95	NB	Med	1	ADJUST INLET (Exist G1 INLET)
3.95	SB	Med	1	ADJUST INLET (Exist G1 INLET)
4.00	SB	Med	1	ADJUST INLET (Exist G1 INLET)
4.06	NB	Med	1	ADJUST INLET (Exist G1 INLET)
4.06	SB	Med	1	ADJUST INLET (Exist G1 INLET)
4.10	SB	Med	1	ADJUST INLET (Exist G1 INLET)
4.11	SB	Med	1	ADJUST INLET (Exist G1 INLET)
4.12	SB	Med	1	ADJUST INLET (Exist G1 INLET)
4.14	SB	Med	1	ADJUST INLET (Exist G1 INLET)
4.20	NB	Med	1	ADJUST INLET (Exist G1 INLET)
4.20	SB	Med	1	ADJUST INLET (Exist G1 INLET)
4.27	SB	Med	1	ADJUST INLET (Exist G1 INLET)
4.36	NB	Med	1	ADJUST INLET (Exist G1 INLET)
4.36	SB	Med	1	ADJUST INLET (Exist G1 INLET)
4.44	SB	Med	1	ADJUST INLET (Exist G1 INLET)
4.52	SB	Med	1	ADJUST INLET (Exist G1 INLET)
4.53	SB	Med	1	ADJUST INLET (Exist G1 INLET)
4.54	SB	Med	1	ADJUST INLET (Exist G1 INLET)
4.59	SB	Med	1	ADJUST INLET (Exist G1 INLET)
5.05	NB	Shld	1	ADJUST INLET (Exist G1 INLET)
5.10	NB	Shld	1	ADJUST INLET (Exist G1 INLET)
SUBTOTAL B			33	
SUBTOTAL A			33	
TOTAL			66	

DRAINAGE QUANTITIES
DQ-2

DM	HR	RAY CHANG	REVISED BY	FUNCTIONAL SUPERVISOR	CALCULATED-DESIGNED BY
05-04-16	02-17-16	DAVID MELIS	DATE REVISED	CAROLINE REYES	CHECKED BY

STATE OF CALIFORNIA - DEPARTMENT OF TRANSPORTATION
Caltrans® DESIGN

LAST REVISION 07-15-16 | DATE PLOTTED => 25-JUL-2016 | TIME PLOTTED => 15:13

Dist	COUNTY	ROUTE	POST MILES TOTAL PROJECT	SHEET No.	TOTAL SHEETS
10	SJ	99	0.0/5.7	33	116

David E. Melis 5/2/16
REGISTERED CIVIL ENGINEER DATE

5-2-16
PLANS APPROVAL DATE

REGISTERED PROFESSIONAL ENGINEER
DAVID E MELIS
No. 54383
Exp. 12/31/2017
CIVIL
STATE OF CALIFORNIA

THE STATE OF CALIFORNIA OR ITS OFFICERS OR AGENTS SHALL NOT BE RESPONSIBLE FOR THE ACCURACY OR COMPLETENESS OF SCANNED COPIES OF THIS PLAN SHEET.

NOTES:

1. FOR ACCURATE RIGHT OF WAY DATA, CONTACT RIGHT OF WAY ENGINEERING AT THE DISTRICT OFICE.
2. LOCATION OF UTILITY FACILITIES SHOWN ON THIS PLAN ARE APPROXIMATE AND SHALL BE VERIFIED BY THE CONTRACTOR PRIOR TO CONSTRUCTION.

LEGEND:

- POTHOLE OR UTILITY DETECTION LOCATION
- POTHOLE No.

UTILITY OWNERSHIP:

GAS - PACIFIC GAS & ELECTRIC COMPANY (PG&E)
ELECTRIC - PACIFIC GAS & ELECTRIC COMPANY (PG&E)
COMMUNICATION (FIBER OPTIC) - SPRINT
PETROLEUM - KINDER MORGAN

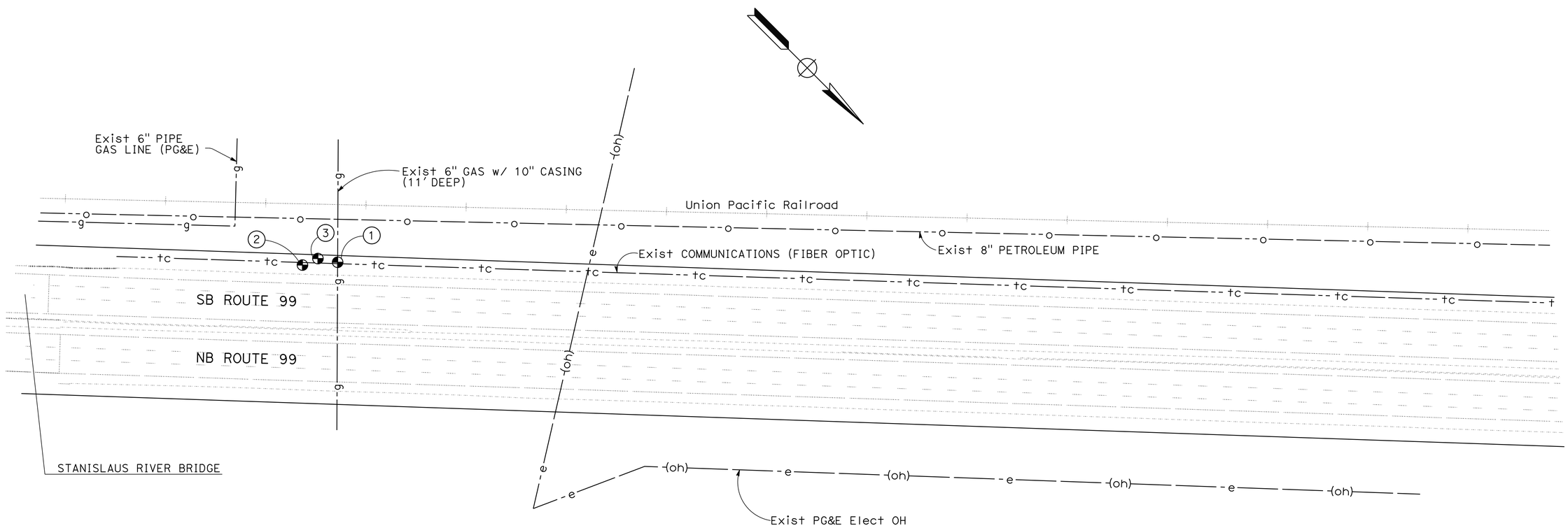

POSITIVE POTHOLE LOCATION INFORMATION

No.	LOCATION	DEPTH	UTILITIES	METHOD	NOTES
1	21' FROM THE NEAREST EDGE OF TRAVELED WAY OF SB ROUTE 99	11'	6" GAS LINE w/ 10" CASING	POTHOLING	NOTHING FOUND AT LOCATION OF USA MARKING. (11' DEEP ACCORDING TO PG&E FIELD REPRESENTATIVE)
2	21' FROM THE NEAREST EDGE OF TRAVELED WAY OF SB ROUTE 99	N/A	COMMUNICATION (FIBER OPTIC)	POTHOLING	NOTHING FOUND AT LOCATION OF USA MARKING
3	23' FROM THE NEAREST EDGE OF TRAVELED WAY OF SB ROUTE 99	N/A	COMMUNICATION (FIBER OPTIC)	POTHOLING	NOTHING FOUND AT LOCATION OF USA MARKING

THIS PLAN TO BE USED FOR UTILITY INFORMATION ONLY

UTILITY PLAN
SCALE: 1"=50'

U-1

REVISED BY	HR
DATE REVISED	02-17-16

CALCULATED-DESIGNED BY	RAY CHANG
CHECKED BY	DAVID MELIS

FUNCTIONAL SUPERVISOR: CAROLINE REYES

STATE OF CALIFORNIA - DEPARTMENT OF TRANSPORTATION
Caltrans
DESIGN

LAST REVISION 07-15-16
DATE PLOTTED => 25-JUL-2016
TIME PLOTTED => 15:13

Dist	COUNTY	ROUTE	POST MILES TOTAL PROJECT	SHEET No.	TOTAL SHEETS
10	SJ	99	0.0/5.7	34	116

David E. Melis 5/2/16
REGISTERED CIVIL ENGINEER DATE

5-2-16
PLANS APPROVAL DATE

REGISTERED PROFESSIONAL ENGINEER
DAVID E MELIS
No. 54383
Exp. 12/31/2017
CIVIL
STATE OF CALIFORNIA

THE STATE OF CALIFORNIA OR ITS OFFICERS OR AGENTS SHALL NOT BE RESPONSIBLE FOR THE ACCURACY OR COMPLETENESS OF SCANNED COPIES OF THIS PLAN SHEET.

POSITIVE POTHOLE LOCATION INFORMATION

No.	LOCATION	DEPTH	UTILITIES	METHOD	NOTES
4	8.5' FROM THE NEAREST EDGE OF TRAVELED WAY OF SB ON-RAMP Sep	N/A	16" WATER MAIN	POTHOLING	NOTHING FOUND AT LOCATION OF USA MARKING
5	UNDERNEATH TRAVELED WAY	ABOUT 30'	4" GAS STEEL PIPE	ELECTRONIC DETECTION	NOTHING FOUND, BUT DETECTED WITH A TRACER WIRE. (30' DEEP ACCORDING TO PG&E FIELD REPRESENTATIVE)

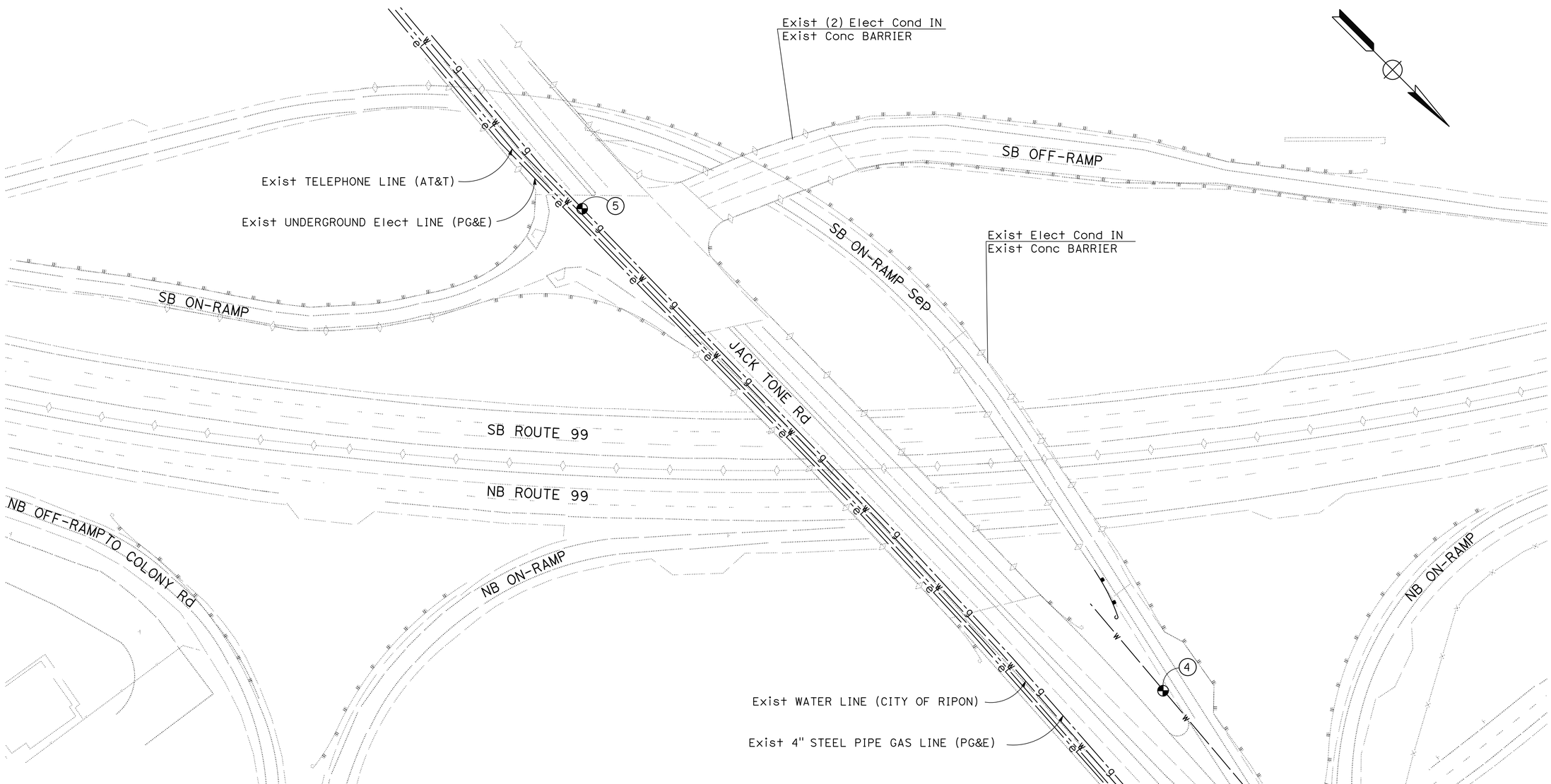

THIS PLAN TO BE USED FOR UTILITY INFORMATION ONLY

UTILITY PLAN
NO SCALE **U-2**

STATE OF CALIFORNIA - DEPARTMENT OF TRANSPORTATION
Caltrans® **DESIGN**

FUNCTIONAL SUPERVISOR: CAROLINE REYES
CALCULATED-DESIGNED BY: RAY CHANG
CHECKED BY: DAVID MELIS
REVISED BY: HR
DATE REVISED: 02-17-16

LAST REVISION 07-15-16
DATE PLOTTED => 25-JUL-2016
TIME PLOTTED => 15:13

Dist	COUNTY	ROUTE	POST MILES TOTAL PROJECT	SHEET No.	TOTAL SHEETS
10	SJ	99	0.0/5.7	35	116

REGISTERED CIVIL ENGINEER 4/14/16 DATE

5-2-16
PLANS APPROVAL DATE

REGISTERED PROFESSIONAL ENGINEER FAWZI YAGHMOUR No. C-54750 Exp. 12/31/17 CIVIL STATE OF CALIFORNIA

THE STATE OF CALIFORNIA OR ITS OFFICERS OR AGENTS SHALL NOT BE RESPONSIBLE FOR THE ACCURACY OR COMPLETENESS OF SCANNED COPIES OF THIS PLAN SHEET.

NOTES:

1. EXACT LOCATIONS OF CAS TO BE DETERMINED BY THE ENGINEER.
2. FOR SIGN "C40" (TRAFFIC FINES DOUBLED IN CONSTRUCTION ZONES), ALL LETTERS MUST BE BLACK ON WHITE BACKGROUND.
3. FOR ADDTIONAL CAS SEE MI AND TH PLAN SHEETS.

LEGEND:

(X) CONSTRUCTION AREA SIGN NUMBER

STATIONARY MOUNTED CONSTRUCTION AREA SIGNS

SIGN No.	SIGN CODE	PANEL SIZE	SIGN MESSAGE	No. OF POSTS	POST SIZE	No. OF SIGNS
A	W20-1	48" x 48"	ROAD WORK AHEAD	2	6" x 6"	6
B	W20-1	36" x 36"	ROAD WORK AHEAD	1	4" x 6"	12
C	G20-2	36" x 18"	END ROAD WORK	1	4" x 4"	12
D	G20-1	90" x 48"	ROAD WORK NEXT 5 MILES	2	4" x 4"	6
E	C40(CA)	102"x 42"	TRAFFIC FINES DOUBLED IN CONSTRUCTION ZONES	2	6" x 6"	6

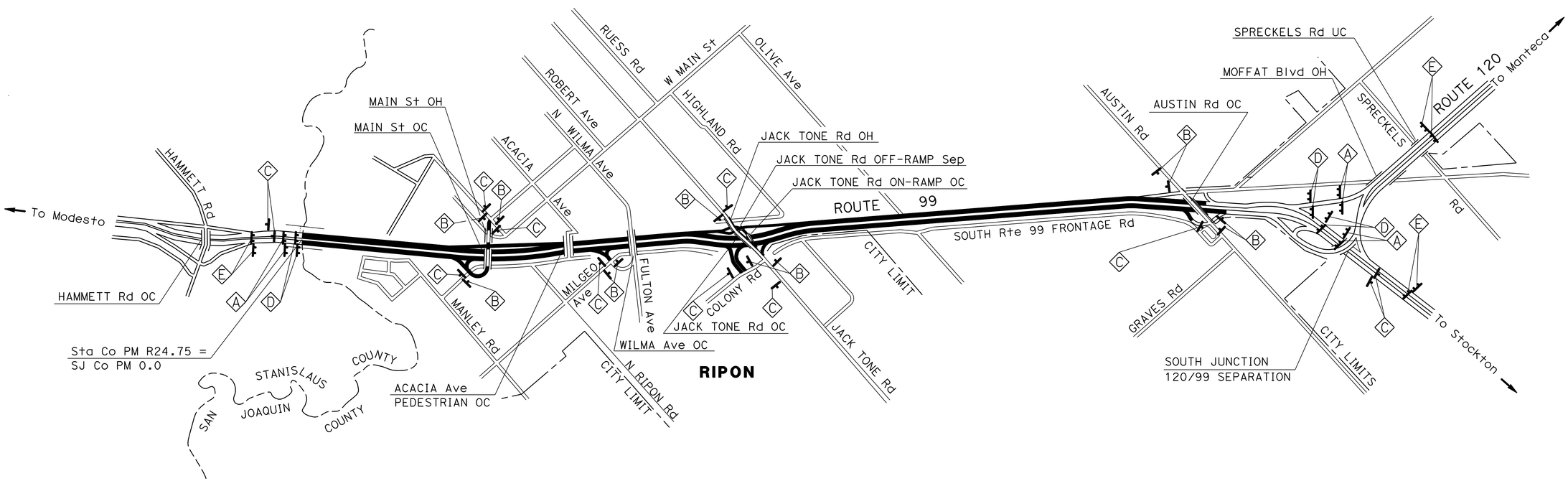

CONSTRUCTION AREA SIGNS

NO SCALE

CS-1

APPROVED FOR CONSTRUCTION AREA SIGN WORK ONLY

REVISED BY	FAWZI YAGHMOUR
DATE REVISED	02-22-16
CALCULATED-DESIGNED BY	GURMIT GILL
CHECKED BY	FAWZI YAGHMOUR
FUNCTIONAL SUPERVISOR	MOHAMMED QATAMI

STATE OF CALIFORNIA - DEPARTMENT OF TRANSPORTATION
Caltrans
TRAFFIC DESIGN

LAST REVISION 06-30-16
DATE PLOTTED => 25-JUL-2016
TIME PLOTTED => 15:13

Dist	COUNTY	ROUTE	POST MILES TOTAL PROJECT	SHEET No.	TOTAL SHEETS
10	SJ	99	0.0/5.7	36	116

REGISTERED CIVIL ENGINEER 4/14/16 DATE

5-2-16
PLANS APPROVAL DATE

REGISTERED PROFESSIONAL ENGINEER FAWZI YAGHMOUR No. 54750 Exp. 12-31-17 CIVIL STATE OF CALIFORNIA

THE STATE OF CALIFORNIA OR ITS OFFICERS OR AGENTS SHALL NOT BE RESPONSIBLE FOR THE ACCURACY OR COMPLETENESS OF SCANNED COPIES OF THIS PLAN SHEET.

LEGEND:

(X) SIGN No.

CONSTRUCTION AREA SIGN / PORTABLE SIGN

NOTES:

1. EXACT SIGN LOCATIONS TO BE DETERMINED BY THE ENGINEER.
2. FOR ADDITIONAL CONSTRUCTION AREA SIGN SEE THRAFFIC HANDLING PLAN AND CONSTRUCTION AREA SIGN SHEETS.
3. DURING THE MAIN STREET OFF-RAMP CLOSURE, THE PCMS MESSAGE SHOULD READ.....

MAIN STREET OFF-RAMP CLOSED	USE JACK TONE Rd OFF RAMP
1ST FRAME	2ND FRAME

4. DURING THE AUSTIN ROAD OFF-RAMP CLOSURE, THE PCMS MESSAGE SHOULD READ.....

AUSTIN ROAD OFF-RAMP CLOSED	USE YOSEMITE OFF RAMP
1ST FRAME	2ND FRAME

TRAFFIC DETOUR (NB OFF-RAMP CLOSED)

NB ROUTE 99 OFF RAMP AT MAIN St CLOSED
CONTINUE NB ROUTE 99
TAKE JACK TONE Rd OFF-RAMP
TURN LEFT ON COLONY Rd
TURN LEFT ON JACK TONE Rd
TAKE SB ROUTE 99 ON-RAMP
CONTINUE SB ROUTE 99
TAKE MAIN St OFF-RAMP
TURN TO MAIN St

TRAFFIC DETOUR (SB ON-RAMP CLOSED)

NB ROUTE 99 ON-RAMP AT MAIN St CLOSED
CONTINUE MAIN St
TAKE NB ROUTE 99 ON-RAMP
TAKE JACK TONE Rd OFF-RAMP
TURN LEFT AT COLONY Rd
TURN LEFT AT JACK TONE Rd
TAKE SB ROUTE 99 ON-RAMP
CONTINUE SB ROUTE 99

TRAFFIC DETOUR (NB OFF-RAMP CLOSED)

NB ROUTE 99 OFF RAMP AT AUSTIN Rd CLOSED
CONTINUE NB ROUTE 99
TAKE YOSEMITE Ave OFF-RAMP
TURN LEFT AT YOSEMITE Ave
TURN LEFT AT SB ROUTE 99 ON-RAMP
CONTINUE SB ROUTE 99
TAKE AUSTIN Rd OFF-RAMP
TURN LEFT AT MOFFAT Ave

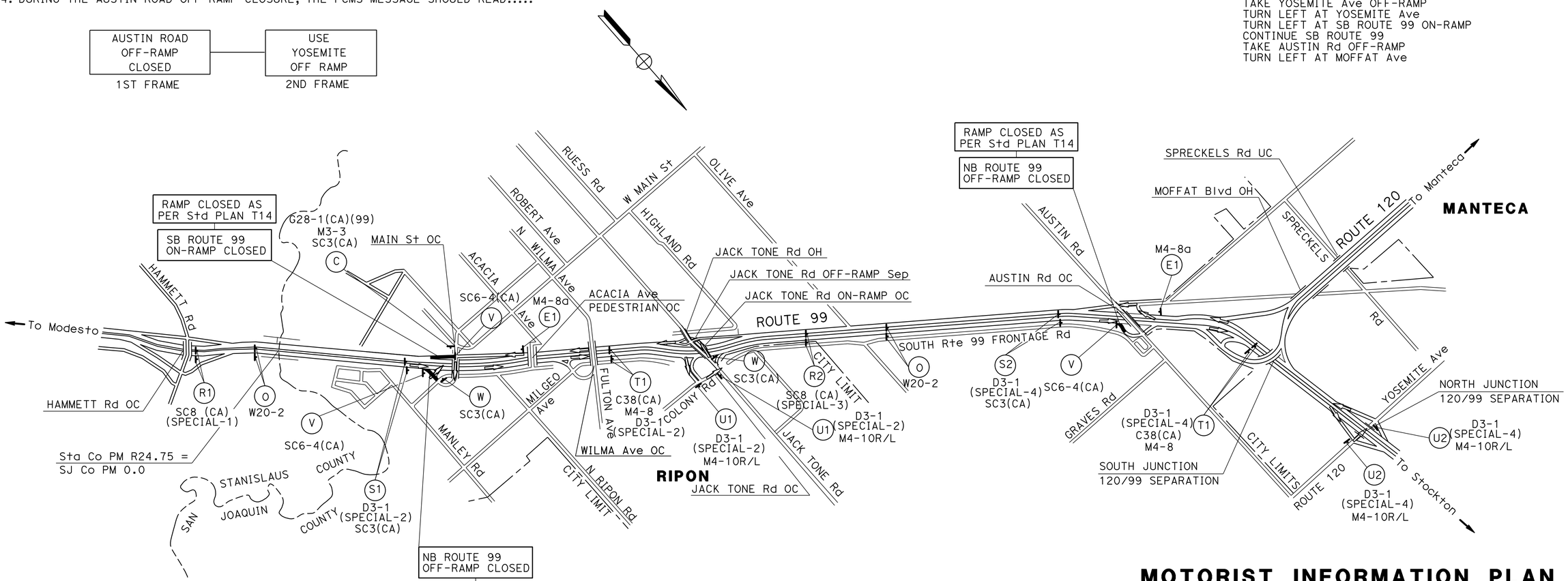

MOTORIST INFORMATION PLAN
(NB ROUTE 99 ON/OFF RAMP AT MAIN St AND NB ROUTE 99 ON RAMP AT AUSTIN Rd CLOSED)

APPROVED FOR MOTORIST INFORMATION WORK ONLY

NO SCALE

MI-1

STATE OF CALIFORNIA - DEPARTMENT OF TRANSPORTATION
Caltrans® **TRAFFIC DESIGN**

FUNCTIONAL SUPERVISOR: MOHAMMED QATAMI
CALCULATED-DESIGNED BY: GURMIT GILL
CHECKED BY: FAWZI YAGHMOUR
REVISED BY: FAWZI YAGHMOUR
DATE REVISED: 02-22-16

LAST REVISION 07-15-16 | DATE PLOTTED => 25-JUL-2016 | TIME PLOTTED => 15:13

Dist	COUNTY	ROUTE	POST MILES TOTAL PROJECT	SHEET No.	TOTAL SHEETS
10	SJ	99	0.0/5.7	37	116

REGISTERED CIVIL ENGINEER 4/14/16 DATE

5-2-16
PLANS APPROVAL DATE

REGISTERED PROFESSIONAL ENGINEER FAWZI YAGHMOUR No. 54750 Exp. 12-31-17 CIVIL STATE OF CALIFORNIA

THE STATE OF CALIFORNIA OR ITS OFFICERS OR AGENTS SHALL NOT BE RESPONSIBLE FOR THE ACCURACY OR COMPLETENESS OF SCANNED COPIES OF THIS PLAN SHEET.

NOTE:

1. DURING THE MAIN ST OFF-RAMP CLOSURE, THE PCMS MESSAGE SHOULD READ.....

MAIN ST OFF-RAMP CLOSED	USE HAMMETT Rd OFF RAMP
1ST FRAME	2ND FRAME

TRAFFIC DETOUR (NB ON-RAMP CLOSED)

NB ROUTE 99 ON-RAMP AT MAIN St CLOSED

DRIVERS FROM MAINLEY Rd:
CONTINUE E MAIN St
TURN RIGHT AT N RIPON Rd
TURN LEFT AT MILGEO Ave
TAKE MILGEO Ave ON-RAMP

DRIVERS FROM E MAIN St:
CONTINUE E MAIN St
TURN LEFT AT MAINLEY Rd
TURN LEFT AT MILGEO Ave
TAKE MILGEO Ave ON-RAMP

TRAFFIC DETOUR (SB OFF-RAMP CLOSED)

SB ROUTE 99 OFF-RAMP AT MAIN St CLOSED
CONTINUE SB ROUTE 99
TAKE OFF AT HAMMETT Rd OFF-RAMP
TURN LEFT AT HAMMETT Rd
TURN LEFT AT NB ROUTE 99 ON-RAMP
CONTINUE NB ROUTE 99
TAKE MAIN St OFF-RAMP

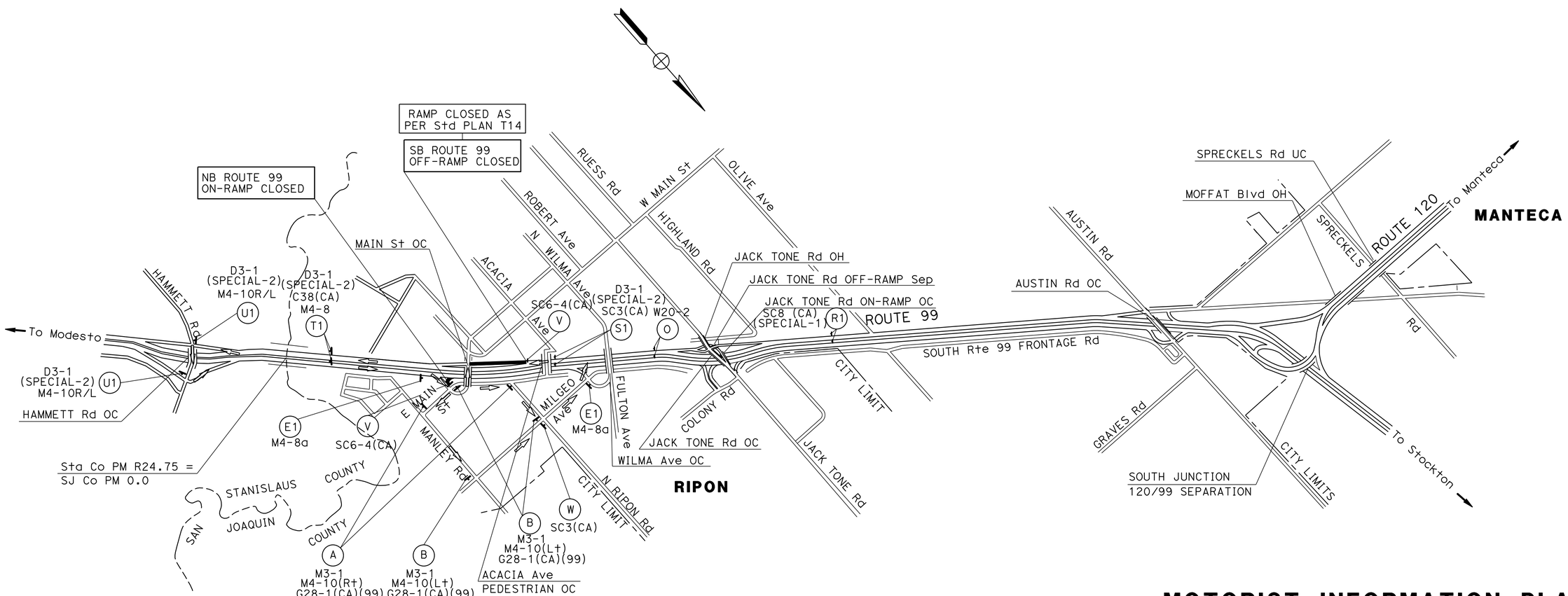

MOTORIST INFORMATION PLAN

(NB AND SB ROUTE 99 ON/OFF RAMP AT MAIN St CLOSED)

MI-2

APPROVED FOR MOTORIST INFORMATION WORK ONLY

NO SCALE

CALCULATED-DESIGNED BY	CHECKED BY	FUNCTIONAL SUPERVISOR	REVISED BY	DATE REVISED
GURMIT GILL	FAWZI YAGHMOUR	MOHAMMED QATAMI	FAWZI YAGHMOUR	02-22-16

STATE OF CALIFORNIA - DEPARTMENT OF TRANSPORTATION
Caltrans® TRAFFIC DESIGN

LAST REVISION 07-15-16 | DATE PLOTTED => 25-JUL-2016 | TIME PLOTTED => 15:14

Dist	COUNTY	ROUTE	POST MILES TOTAL PROJECT	SHEET No.	TOTAL SHEETS
10	SJ	99	0.0/5.7	38	116

REGISTERED CIVIL ENGINEER 4/14/16 DATE

5-2-16
PLANS APPROVAL DATE

REGISTERED PROFESSIONAL ENGINEER FAWZI YAGHMOUR No. 54750 Exp. 12-31-17 CIVIL STATE OF CALIFORNIA

THE STATE OF CALIFORNIA OR ITS OFFICERS OR AGENTS SHALL NOT BE RESPONSIBLE FOR THE ACCURACY OR COMPLETENESS OF SCANNED COPIES OF THIS PLAN SHEET.

NOTE:

DURING THE MILGO Ave OFF-RAMP CLOSURE, THE PCMS MESSAGE SHOULD READ.....

MILGO Ave OFF-RAMP CLOSED	USE JACK TONE Rd OFF RAMP
1ST FRAME	2ND FRAME

TRAFFIC DETOUR (NB OFF-RAMP CLOSED)

NB ROUTE 99 OFF-RAMP AT MILGEO Ave CLOSED
CONTINUE NB ROUTE 99
TAKE JACK TONE Rd OFF-RAMP
TURN RIGHT AT COLONY Rd
TURN RIGHT AT FULTON Ave
TURN LEFT AT ARC Way
TURN TO MILGEO Ave

TRAFFIC DETOUR (NB ON-RAMP CLOSED)

NB ROUTE 99 ON-RAMP AT JACK TONE RD CLOSED
CONTINUE COLONY Rd
TURN RIGHT AT FULTON Ave
TURN LEFT AT ARC Way
TAKE NB ROUTE 99 ON-RAMP

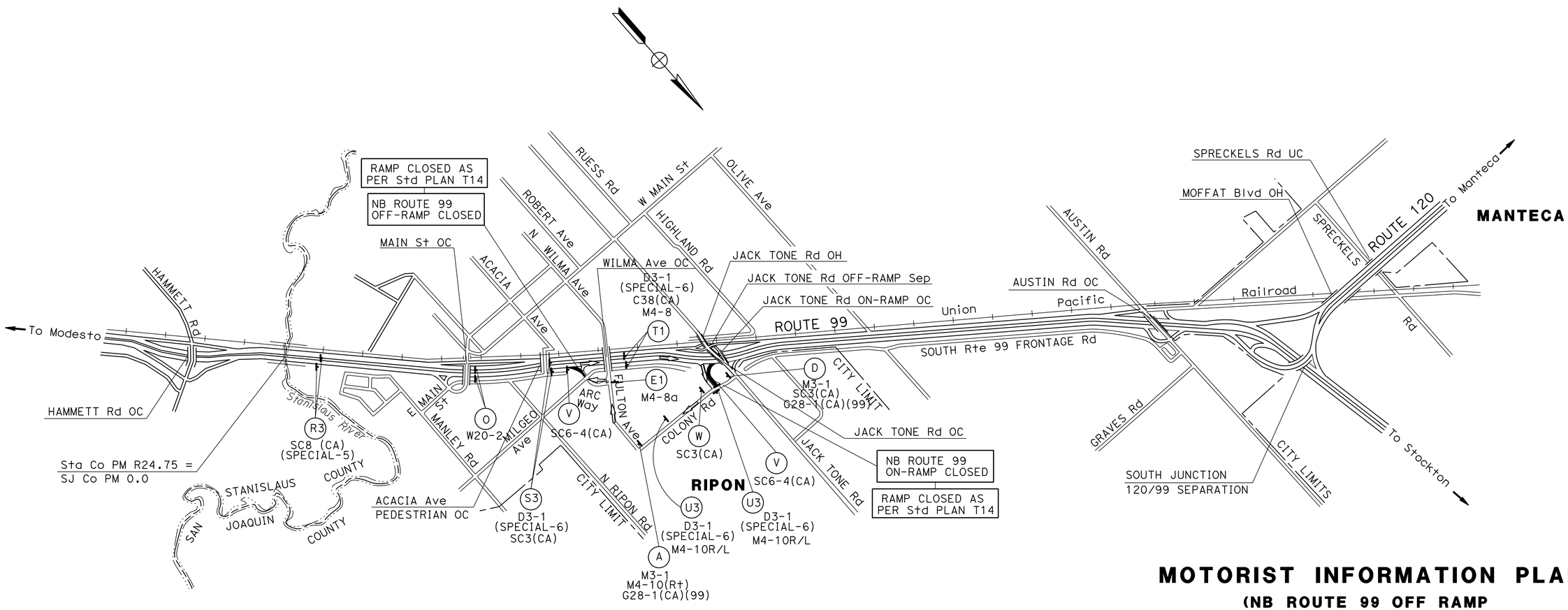

MOTORIST INFORMATION PLAN

(NB ROUTE 99 OFF RAMP AT MILGEO Ave AND NB ROUTE 99 ON RAMP AT JACK TONE Rd CLOSED)

NO SCALE

MI-3

APPROVED FOR MOTORIST INFORMATION WORK ONLY

STATE OF CALIFORNIA - DEPARTMENT OF TRANSPORTATION
Caltrans® **TRAFFIC DESIGN**

FUNCTIONAL SUPERVISOR: MOHAMMED QATAMI
CALCULATED-DESIGNED BY: GURMIT GILL
CHECKED BY: FAWZI YAGHMOUR
REVISED BY: FAWZI YAGHMOUR
DATE REVISED: 02-22-16

LAST REVISION 07-15-16
DATE PLOTTED => 25-JUL-2016
TIME PLOTTED => 15:14

Dist	COUNTY	ROUTE	POST MILES TOTAL PROJECT	SHEET No.	TOTAL SHEETS
10	SJ	99	0.0/5.7	39	116

REGISTERED CIVIL ENGINEER 4/14/16 DATE

5-2-16
PLANS APPROVAL DATE

REGISTERED PROFESSIONAL ENGINEER FAWZI YAGHMOUR No. 54750 Exp. 12-31-17 CIVIL STATE OF CALIFORNIA

THE STATE OF CALIFORNIA OR ITS OFFICERS OR AGENTS SHALL NOT BE RESPONSIBLE FOR THE ACCURACY OR COMPLETENESS OF SCANNED COPIES OF THIS PLAN SHEET.

NOTE:

DURING THE JACK TONE Rd ON-RAMP CLOSURE, THE PCMS MESSAGE SHOULD READ.....

JACK TONE Rd SB ON-RAMP CLOSED	USE AUSTIN Rd
1ST FRAME	2ND FRAME

TRAFFIC DETOUR (SB CONNECTOR ON-RAMP CLOSED)

SB ROUTE 99 CONNECTOR ON-RAMP AT JACK TONE Rd CLOSED
CONTINUE JACK TONE Rd
TURN LEFT AT W MAIN St
TURN LEFT AT MAIN St
TAKE SB ROUTE 99 ON-RAMP

TRAFFIC DETOUR (SB ON-RAMP CLOSED)

SB ROUTE 99 ON-RAMP AT JACK TONE Rd CLOSED
CONTINUE JACK TONE Rd
TURN RIGHT AT COLONY Rd
TURN RIGHT AND TAKE NB ROUTE 99 ON-RAMP
CONTINUE NB ROUTE 99
TAKE AUSTIN Rd OFF-RAMP
TURN LEFT AT AUSTIN Rd
TURN LEFT AT SB ROUTE 99 ON-RAMP

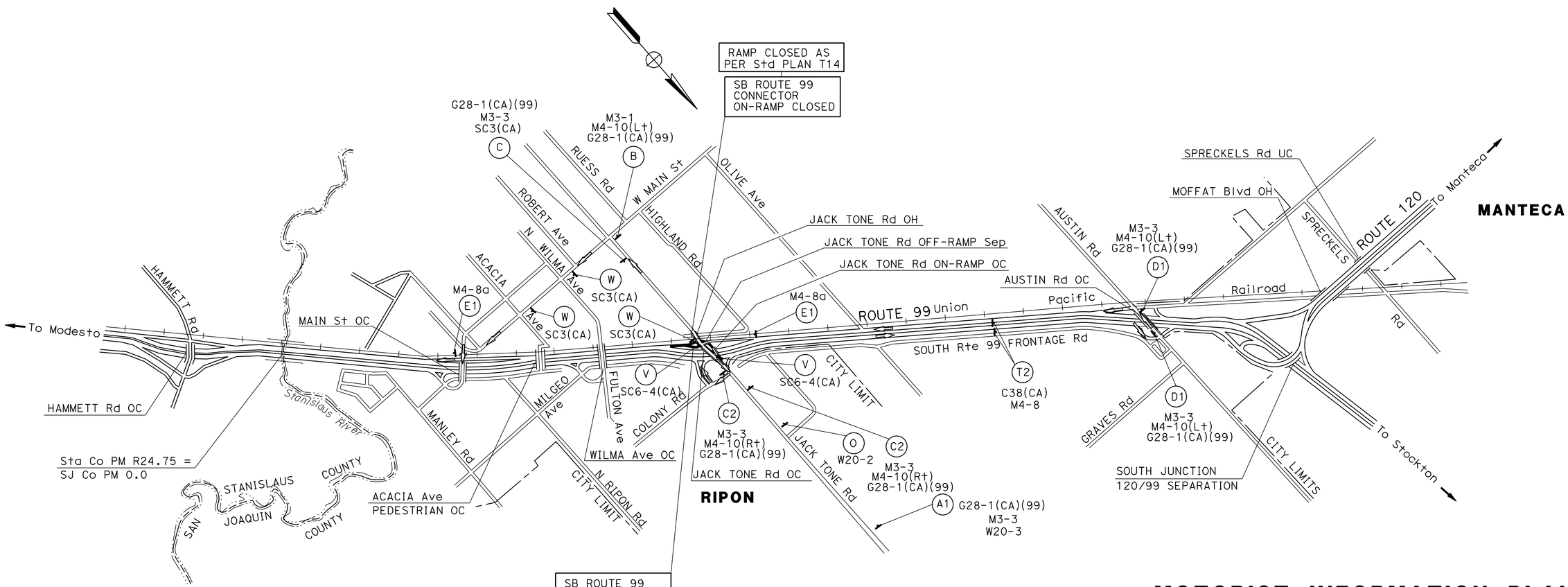

MOTORIST INFORMATION PLAN

(SB ROUTE 99 ON RAMP AT JACK TONE Rd CLOSED)

MI-4

APPROVED FOR MOTORIST INFORMATION WORK ONLY

NO SCALE

STATE OF CALIFORNIA - DEPARTMENT OF TRANSPORTATION
Caltrans® TRAFFIC DESIGN

FUNCTIONAL SUPERVISOR: MOHAMMED QATAMI
CALCULATED-DESIGNED BY: GURMIT GILL
CHECKED BY: FAWZI YAGHMOUR
REVISED BY: FAWZI YAGHMOUR
DATE REVISED: 02-22-16

LAST REVISION 07-15-16
DATE PLOTTED => 25-JUL-2016
TIME PLOTTED => 15:14

Dist	COUNTY	ROUTE	POST MILES TOTAL PROJECT	SHEET No.	TOTAL SHEETS
10	SJ	99	0.0/5.7	40	116

REGISTERED CIVIL ENGINEER 4/14/16 DATE

5-2-16
PLANS APPROVAL DATE

REGISTERED PROFESSIONAL ENGINEER FAWZI YAGHMOUR No. 54750 Exp. 12-31-17 CIVIL STATE OF CALIFORNIA

THE STATE OF CALIFORNIA OR ITS OFFICERS OR AGENTS SHALL NOT BE RESPONSIBLE FOR THE ACCURACY OR COMPLETENESS OF SCANNED COPIES OF THIS PLAN SHEET.

NOTE:

DURING THE JACK TONE Rd OFF-RAMP CLOSURE, THE PCMS MESSAGE SHOULD READ.....

JACK TONE Rd OFF-RAMP CLOSED	USE MAIN ST OFF RAMP
1ST FRAME	2ND FRAME

TRAFFIC DETOUR (SB OFF-RAMP CLOSED)

SB ROUTE 99 OFF-RAMP AT JACK TONE Rd CLOSED
CONTINUE SB ROUTE 99
TAKE MAIN St OFF-RAMP
TURN LEFT AT MAIN St
TURN LEFT AT NB ROUTE 99 ON-RAMP
CONTINUE NB ROUTE 99
TAKE OFF AT JACK TONE Rd OFF-RAMP

TRAFFIC DETOUR (NB ON-RAMP CLOSED)

NB ROUTE 99 ON-RAMP AT JACK TONE Rd CLOSED
TURN LEFT AT COLONY Rd
TURN RIGHT AT NB ROUTE 99 ON-RAMP

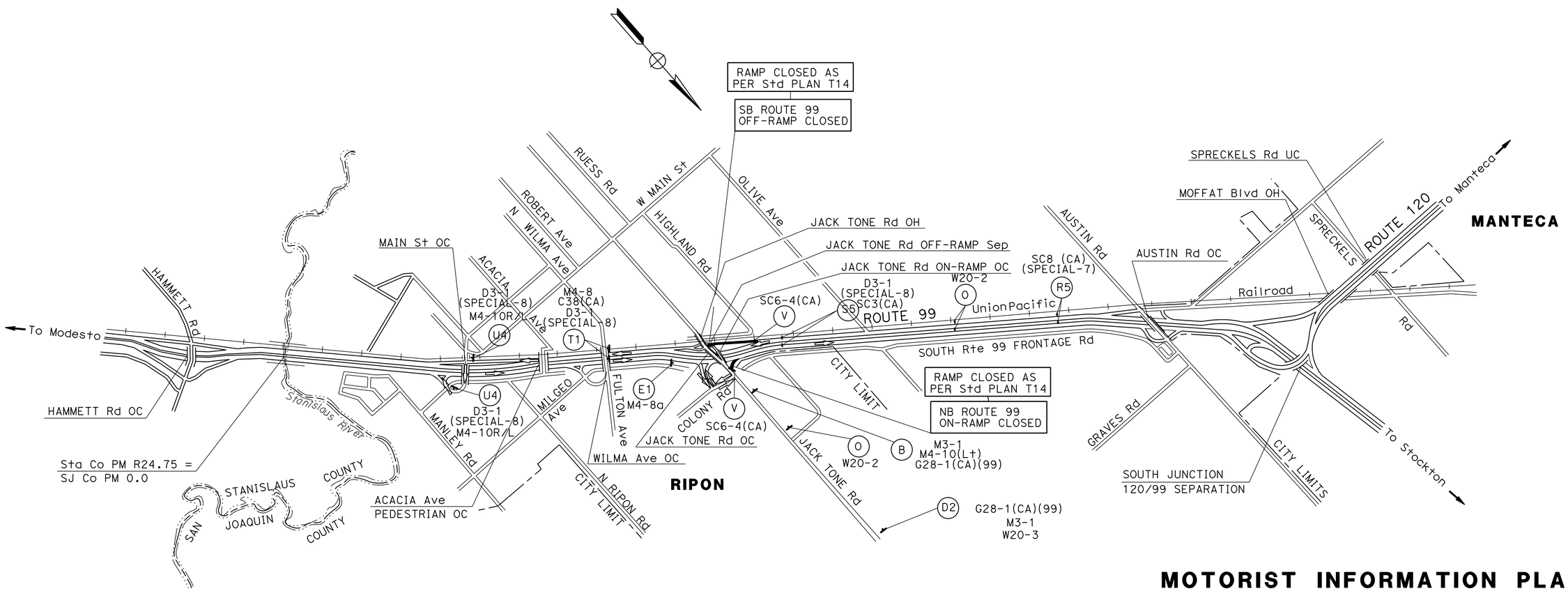

MOTORIST INFORMATION PLAN

(SB ROUTE 99 OFF RAMP AND NB ROUTE 99 ON RAMP AT JACK TONE Rd CLOSED)

MI-5

APPROVED FOR MOTORIST INFORMATION WORK ONLY

NO SCALE

STATE OF CALIFORNIA - DEPARTMENT OF TRANSPORTATION
Caltrans® TRAFFIC DESIGN

FUNCTIONAL SUPERVISOR: MOHAMMED QATAMI
CALCULATED-DESIGNED BY: GURMIT GILL
CHECKED BY: FAWZI YAGHMOUR
REVISED BY: FAWZI YAGHMOUR
DATE REVISED: 02-22-16

LAST REVISION 07-15-16
DATE PLOTTED => 25-JUL-2016
TIME PLOTTED => 15:14

Dist	COUNTY	ROUTE	POST MILES TOTAL PROJECT	SHEET No.	TOTAL SHEETS
10	SJ	99	0.0/5.7	41	116

REGISTERED CIVIL ENGINEER 4/14/16 DATE

5-2-16
PLANS APPROVAL DATE

REGISTERED PROFESSIONAL ENGINEER FAWZI YAGHMOUR No. 54750 Exp. 12-31-17 CIVIL STATE OF CALIFORNIA

THE STATE OF CALIFORNIA OR ITS OFFICERS OR AGENTS SHALL NOT BE RESPONSIBLE FOR THE ACCURACY OR COMPLETENESS OF SCANNED COPIES OF THIS PLAN SHEET.

NOTE:

DURING THE JACK TONE Rd OFF-RAMP CLOSURE, THE PCMS MESSAGE SHOULD READ.....

JACK TONE Rd OFF-RAMP CLOSED	USE AUSTIN Rd OFF RAMP
1ST FRAME	2ND FRAME

TRAFFIC DETOUR (NB ON-RAMP CLOSED)

NB ROUTE 99 ON-RAMP AT MILGEO Ave CLOSED
TURN TO ARC Way
TURN RIGHT AT FULTON Ave
TURN LEFT AT COLONY Rd
TURN LEFT AND TAKE NB ROUTE 99 ON-RAMP

TRAFFIC DETOUR (NB OFF-RAMP CLOSED)

NB ROUTE 99 OFF-RAMP AT JACK TONE Rd CLOSED
CONTINUE NB ROUTE 99
TAKE AUSTIN Rd OFF-RAMP
TURN LEFT AT AUSTIN Rd
TURN LEFT AT SB ROUTE 99 ON-RAMP
CONTINUTE SB ROUTE 99
TAKE OFF AT JACK TONE Rd OFF-RAMP

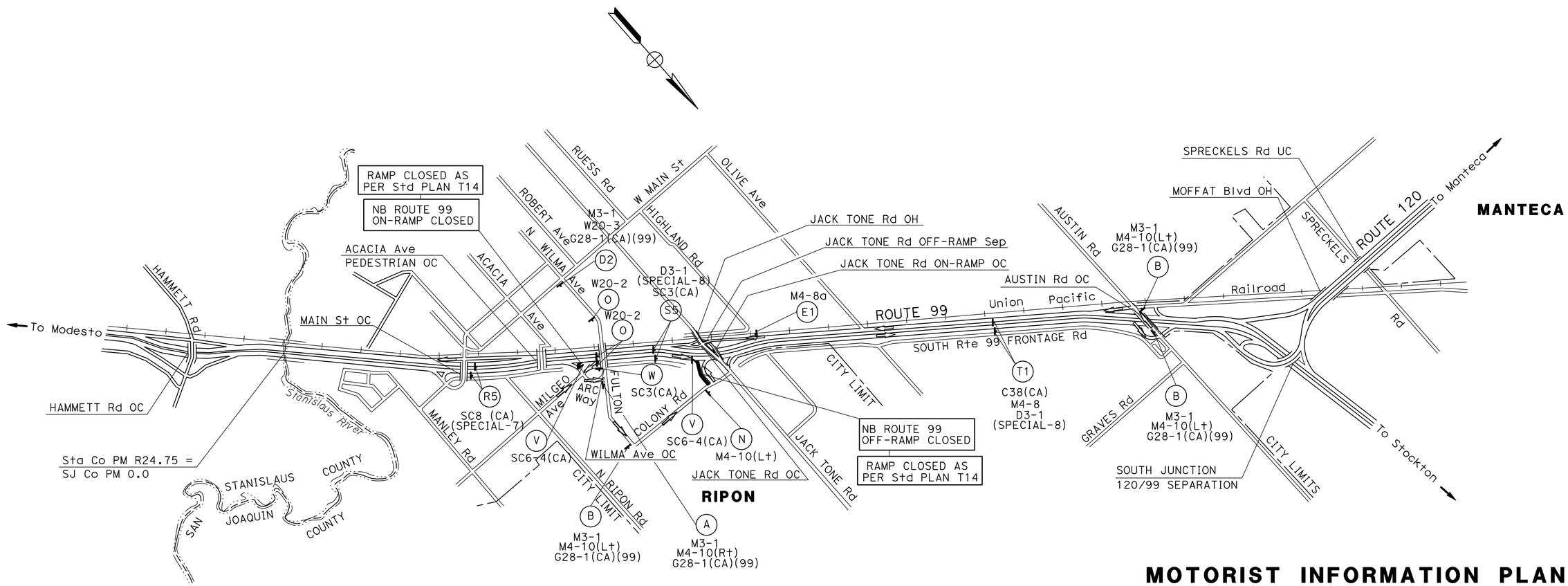

MOTORIST INFORMATION PLAN

(NB ROUTE 99 ON RAMP AT MILGO Ave AND NB ROUTE 99 OFF RAMP AT JACK TONE Rd CLOSED)

MI-6

NO SCALE

APPROVED FOR MOTORIST INFORMATION WORK ONLY

STATE OF CALIFORNIA - DEPARTMENT OF TRANSPORTATION
Caltrans® TRAFFIC DESIGN

FUNCTIONAL SUPERVISOR: MOHAMMED QATAMI
CALCULATED-DESIGNED BY: GURMIT GILL
CHECKED BY: FAWZI YAGHMOUR
REVISED BY: FAWZI YAGHMOUR
DATE REVISED: 02-22-16

LAST REVISION 07-15-16 | DATE PLOTTED => 25-JUL-2016 | TIME PLOTTED => 15:14

Dist	COUNTY	ROUTE	POST MILES TOTAL PROJECT	SHEET No.	TOTAL SHEETS
10	SJ	99	0.0/5.7	42	116

REGISTERED CIVIL ENGINEER 4/14/16 DATE

5-2-16
PLANS APPROVAL DATE

REGISTERED PROFESSIONAL ENGINEER FAWZI YAGHMOUR No. 54750 Exp. 12-31-17 CIVIL STATE OF CALIFORNIA

THE STATE OF CALIFORNIA OR ITS OFFICERS OR AGENTS SHALL NOT BE RESPONSIBLE FOR THE ACCURACY OR COMPLETENESS OF SCANNED COPIES OF THIS PLAN SHEET.

NOTES:

1. DURING THE ROUTE 99 CONNECTOR CLOSURE, THE PCMS MESSAGE SHOULD READ.....

RTE 99 CONNECTOR TO WESTBOUND RTE 120 CLOSED	USE YOSEMITE OFF RAMP
1ST FRAME	2ND FRAME

TRAFFIC DETOUR (NB OFF-RAMP CLOSED)

NB ROUTE 99 CONNECTOR AT WB ROUTE 120 CLOSED
CONTINUE NB ROUTE 99
TAKE YOSEMITE Ave OFF-RAMP
TURN LEFT AT YOSEMITE Ave
TURN LEFT AT SB ROUTE 99 ON-RAMP
CONTINUE SB ROUTE 99
TAKE CONNECTOR RAMP TO WB ROUTE 120

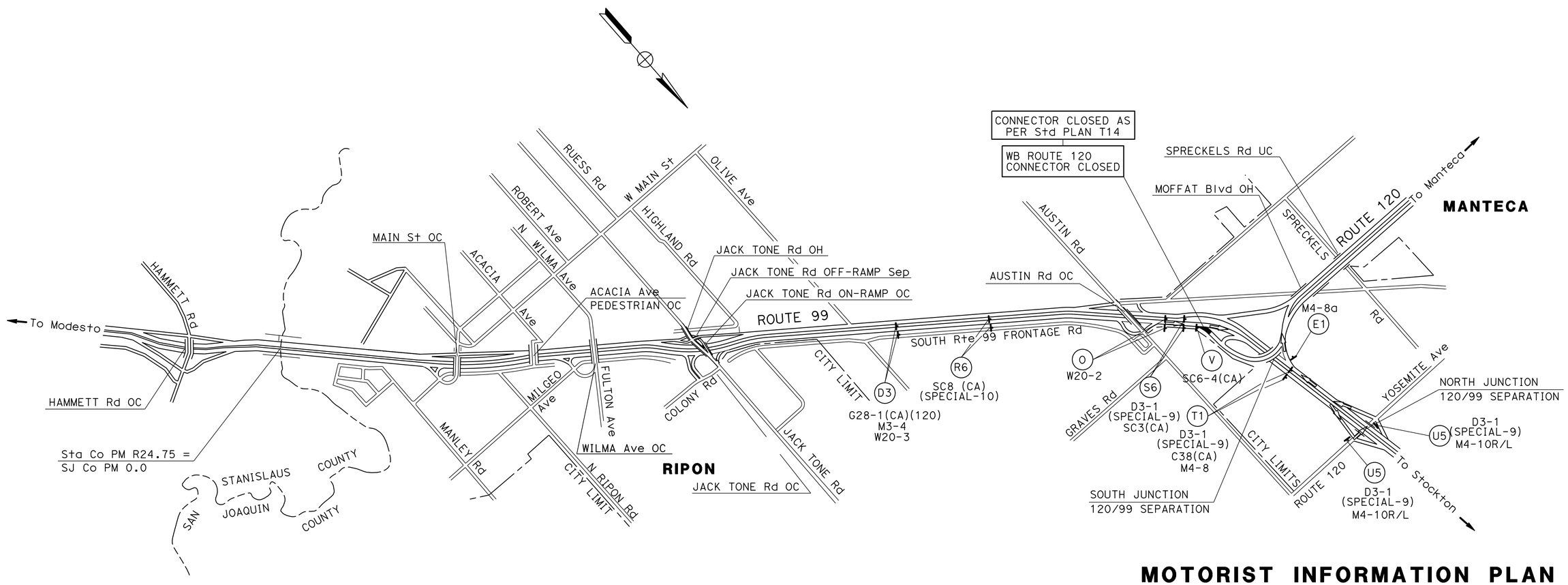

MOTORIST INFORMATION PLAN

(NB ROUTE 99 CONNECTOR RAMP TO WB ROUTE 120 CLOSED)

APPROVED FOR MOTORIST INFORMATION WORK ONLY

NO SCALE

MI-7

STATE OF CALIFORNIA - DEPARTMENT OF TRANSPORTATION
Caltrans® **TRAFFIC DESIGN**

FUNCTIONAL SUPERVISOR: MOHAMMED QATAMI

CALCULATED-DESIGNED BY: GURMIT GILL
CHECKED BY: FAWZI YAGHMOUR

REVISED BY: FAWZI YAGHMOUR
DATE REVISED: 02-22-16

LAST REVISION 07-15-16
DATE PLOTTED => 28-JUL-2016
TIME PLOTTED => 09:51

Dist	COUNTY	ROUTE	POST MILES TOTAL PROJECT	SHEET No.	TOTAL SHEETS
10	SJ	99	0.0/5.7	43	116

REGISTERED CIVIL ENGINEER 4/14/16 DATE

5-2-16
PLANS APPROVAL DATE

REGISTERED PROFESSIONAL ENGINEER FAWZI YAGHMOUR No. 54750 Exp. 12-31-17 CIVIL STATE OF CALIFORNIA

THE STATE OF CALIFORNIA OR ITS OFFICERS OR AGENTS SHALL NOT BE RESPONSIBLE FOR THE ACCURACY OR COMPLETENESS OF SCANNED COPIES OF THIS PLAN SHEET.

(E1) END DETOUR — M4-8a

(M) DETOUR — M4-10(L†)

(N) DETOUR — M4-10(R†)

(O) DETOUR AHEAD — W20-2

(A)
- 99 — G28-1(CA)(99)
- NORTH — M3-1
- DETOUR — M4-10(R†)

(B)
- 99 — G28-1(CA)(99)
- NORTH — M3-1
- DETOUR — M4-10(L†)

(C)
- 99 — G28-1(CA)(99)
- SOUTH — M3-3
- DETOUR — SC3(CA)

(D)
- 99 — G28-1(CA)(99)
- NORTH — M3-1
- DETOUR — SC3(CA)

(A1)
- 99 — G28-1(CA)(99)
- SOUTH — M3-3
- RAMP CLOSED AHEAD — W20-3

(D1)
- 99 — G28-1(CA)(99)
- SOUTH — M3-3
- DETOUR — M4-10(L†)

(C2)
- 99 — G28-1(CA)(99)
- SOUTH — M3-3
- DETOUR — M4-10(R†)

(D2)
- 99 — G28-1(CA)(99)
- NORTH — M3-1
- RAMP CLOSED AHEAD — W20-3

(D3)
- 120 — G28-1(CA)(120)
- WEST — M3-4
- RAMP CLOSED AHEAD — W20-3

(R1) SPECIAL 1 (SC8 (CA))
MAIN STREET EXIT-RAMP CLOSED
5" CAPS BLACK/ORANGE 60" X 24"

(R2) SPECIAL 3 (SC8 (CA))
AUSTIN ROAD EXIT-RAMP CLOSED
5" CAPS BLACK/ORANGE 60" X 24"

(R3) SPECIAL 5 (SC8 (CA))
MILGO Ave EXIT-RAMP CLOSED
5" CAPS BLACK/ORANGE 60" X 24"

(R5) SPECIAL 7 (SC8 (CA))
JACK TONE Rd EXIT-RAMP CLOSED
5" CAPS BLACK/ORANGE 60" X 24"

(R6) SPECIAL 10 (SC8 (CA))
WB ROUTE 120 EXIT-RAMP CLOSED
5" CAPS BLACK/ORANGE 60" X 24"

(S1) SPECIAL 2 (D3-1)
MAIN STREET
5" CAPS BLACK/ORANGE 48" X 18"
DETOUR — SC3(CA)

(S2) SPECIAL 4 (D3-1)
AUSTIN ROAD
5" CAPS BLACK/ORANGE 48" X 18"
DETOUR — SC3(CA)

(S3) SPECIAL 6 (D3-1)
MILGO Ave
5" CAPS BLACK/ORANGE 42" X 18"
DETOUR — SC3(CA)

(S5) SPECIAL 8 (D3-1)
JACK TONE Rd
5" CAPS BLACK/ORANGE 48" X 18"
DETOUR — SC3(CA)

(S6) SPECIAL 9 (D3-1)
WB ROUTE 120
5" CAPS BLACK/ORANGE 48" X 18"
DETOUR — SC3(CA)

(T1)
- SPECIAL 2 (D3-1) MAIN STREET OR SPECIAL 4 (D3-1) AUSTIN ROAD OR SPECIAL 8 (D3-1) JACK TONE Rd
- OR SPECIAL 6 (D3-1) MILGO Ave OR SPECIAL 9 (D3-1) WB ROUTE 120
- DETOUR — M4-8
- USE NEXT EXIT — C38 (CA)

(T2)
- DETOUR — M4-8
- USE NEXT EXIT — C38 (CA)

(U1) SPECIAL 2 (D3-1)
MAIN STREET
5" CAPS BLACK/ORANGE 48" X 18"
DETOUR — M4-10(L†)

(U2) SPECIAL 4 (D3-1)
AUSTIN ROAD
5" CAPS BLACK/ORANGE 48" X 18"
DETOUR — M4-10(L†)

(U3) SPECIAL 6 (D3-1)
MILGO Ave
5" CAPS BLACK/ORANGE 42" X 18"
DETOUR — M4-10(R)

(U4) SPECIAL 8 (D3-1)
JACK TONE Rd
5" CAPS BLACK/ORANGE 48" X 18"
DETOUR — M4-10(R/L)

(U5) SPECIAL 9 (D3-1)
WB ROUTE 120
5" CAPS BLACK/ORANGE 48" X 18"
DETOUR — M4-10(R/L)

(V) RAMP CLOSED — SC6-4(CA)
48 X 60

(W) DETOUR — SC3(CA)

MOTORIST INFORMATION DETAILS
(SIGN DETAILS)

NO SCALE

MID-1

STATE OF CALIFORNIA - DEPARTMENT OF TRANSPORTATION
Caltrans® **TRAFFIC DESIGN**

FUNCTIONAL SUPERVISOR: MOHAMMED QATAMI
CALCULATED-DESIGNED BY: FAWZI YAGHMOUR
CHECKED BY:
REVISED BY: GURMIT GILL
DATE REVISED: FAWZI YAGHMOUR 02-22-16

LAST REVISION 07-15-16
DATE PLOTTED => 25-JUL-2016
TIME PLOTTED => 15:14

Dist	COUNTY	ROUTE	POST MILES TOTAL PROJECT	SHEET No.	TOTAL SHEETS
10	SJ	99	0.0/5.7	44	116

REGISTERED CIVIL ENGINEER 4/14/16 DATE

5-2-16
PLANS APPROVAL DATE

REGISTERED PROFESSIONAL ENGINEER FAWZI YAGHMOUR No. 54750 Exp. 12-31-17 CIVIL STATE OF CALIFORNIA

THE STATE OF CALIFORNIA OR ITS OFFICERS OR AGENTS SHALL NOT BE RESPONSIBLE FOR THE ACCURACY OR COMPLETENESS OF SCANNED COPIES OF THIS PLAN SHEET.

NOTES:

1. FOR ADDITIONAL CONSTRUCTION AREA SIGN SEE SHEET CS-1 AND THQ-1

CONSTRUCTION AREA SIGNS (PORTABLE) (TRAFFIC HANDLING)

SIGN No.	SIGN CODE FEDERAL	SIGN CODE CALIFORNIA	PANEL SIZE	SIGN MESSAGE	No. OF SIGN
E1	M4-8a		24" x 18"	END DETOUR	10
N	M4-9R/L		30" x 24"	DETOUR ARROW (L+)	1
O	W20-2		48" x 48"	DETOUR AHEAD	17
A		G28-1(99)(CA)	28" x 25"	SHIELD(99)	4
	M3-1		26" x 12"	NORTH	
	M4-10R/L		30" x 24"	DETOUR ARROW (R+)	
B		G28-1(99)(CA)	24" x 24"	SHIELD (99)	8
	M3-1		26" x 12"	NORTH	
	M4-10R/L		30" x 24"	DETOUR ARROW (L+)	
C		G28-1(99)(CA)	24" x 24"	SHIELD (99)	2
	M3-3		26" x 12"	SOUTH	
		SC3(CA)	36" x 12"	DETOUR UP ARROW	
D		G28-1(99)(CA)	28" x 25"	MARKER(99)	1
	M3-1		26" x 12"	NORTH	
		SC3(CA)	36" x 12"	DETOUR UP ARROW	
A1		G28-1(99)(CA)	24" x 24"	SHIELD (99)	1
	M3-3		26" x 12"	SOUTH	
	W20-3		48" x 48"	RAMP CLOSED AHEAD	
D1		G28-1(99)(CA)	24" x 24"	SHIELD (99)	2
	M3-3		26" x 12"	SOUTH	
	M4-10R/L		30" x 24"	DETOUR ARROW (L+)	
C2		G28-1(99)(CA)	24" x 24"	SHIELD (99)	2
	M3-3		26" x 12"	SOUTH	
	M4-10R/L		36" x 48"	DETOUR ARROW (R+)	
D2		G28-1(CA)(99)	28" x 25"	SHIELD(99)	2
	M3-1		26" x 12"	NORTH	
	W20-3		48" x 48"	RAMP CLOSED AHEAD	
D3		G28-1(CA)(99)	28" x 25"	SHIELD(120)	2
	M3-1		26" x 12"	NORTH	
	W20-3		48" x 48"	RAMP CLOSED AHEAD	

CONSTRUCTION AREA SIGNS (PORTABLE) (TRAFFIC HANDLING)

SIGN No.	SIGN CODE FEDERAL	SIGN CODE CALIFORNIA	PANEL SIZE	SIGN MESSAGE	No. OF SIGN
R1		SC8(CA)	60" x 24"	MAIN STREET EXIT RAMP CLOSED (SPECIAL-1)	4
R2		SC8(CA)	60" x 24"	AUSTIN ROAD EXIT RAMP CLOSED (SPECIAL-3)	2
R3		SC8(CA)	60" x 24"	MILGO Ave EXIT RAMP CLOSED (SPECIAL-5)	2
R5		SC8(CA)	60" x 42"	JACK TONE ROAD EXIT RAMP CLOSED (SPECIAL-7)	4
R6		SC8(CA)	60" x 42"	WB ROUTE 120 EXIT RAMP CLOSED (SPECIAL-10)	2
S1		D3-1	48" x 18"	MAIN STREET (SPECIA-2)	4
		SC3(CA)	36" x 12"	DETOUR UP ARROW	
S2		D3-1	48" x 18"	AUSTIN ROAD (SPECIAL-4)	2
		SC3(CA)	36" x 12"	DETOUR UP ARROW	
S3		D3-1	42" x 18"	MILGO Ave (SPECIAL-6)	2
		SC3(CA)	36" x 12"	DETOUR UP ARROW	
S5		D3-1	42" x 18"	AUSTIN ROAD (SPECIAL-8)	4
		SC3(CA)	36" x 12"	DETOUR UP ARROW	
T1		D3-1	48" x 18"	VARIES (SPECIAL-2,4,6,8,9)	14
		M4-8	24" x 12"	DETOUR	
		C38(CA)	48" x 36"	USE NEXT EXIT	
T2		M4-8	24" x 12"	DETOUR	2
		C38(CA)	48" x 36"	USE NEXT EXIT	
U1		D3-1	48" x 18"	MAIN STREET (SPECIAL-2)	4
	M4-10R/L		30" x 24"	DETOUR ARROW (L+)	
U2		D3-1	48" x 18"	AUSTIN ROAD (SPECIAL-4)	2
	M4-10R/L		30" x 24"	DETOUR ARROW (L+)	
U3		D3-1	48" x 18"	JACK TONE ROAD(SPECIAL-6)	2
	M4-10R/L		30" x 24"	DETOUR ARROW (R/L)	
U4		D3-1	48" x 18"	JACK TONE ROAD(SPECIAL-8)	2
	M4-10R/L		30" x 24"	DETOUR ARROW (R/L)	
U5		D3-1	48" x 18"	WB ROUTE 120(SPECIAL-9)	2
	M4-10R/L		30" x 24"	DETOUR ARROW (R/L)	
V		SC6-4(CA)	48" x 60"	RAMP CLOSED XX-XX THRU XX-XX	14
W		SC3(CA)	36" x 12"	DETOUR UP ARROW	8

MOTORIST INFORMATION QUANTITIES

MIQ-1

STATE OF CALIFORNIA - DEPARTMENT OF TRANSPORTATION
Caltrans® TRAFFIC DESIGN

FUNCTIONAL SUPERVISOR: MOHAMMED QATAMI
CALCULATED-DESIGNED BY: FAWZI YAGHMOUR
CHECKED BY
REVISED BY: GURMIT GILL
DATE REVISED: FAWZI YAGHMOUR 02-22-16

LAST REVISION 07-15-16
DATE PLOTTED => 25-JUL-2016
TIME PLOTTED => 15:14

Dist	COUNTY	ROUTE	POST MILES TOTAL PROJECT	SHEET No.	TOTAL SHEETS
10	SJ	99	0.0/5.7	45	116

REGISTERED CIVIL ENGINEER DATE 2/10/16

5-2-16
PLANS APPROVAL DATE

REGISTERED PROFESSIONAL ENGINEER FAWZI YAGHMOUR No. 54750 Exp. 12-31-17 CIVIL STATE OF CALIFORNIA

THE STATE OF CALIFORNIA OR ITS OFFICERS OR AGENTS SHALL NOT BE RESPONSIBLE FOR THE ACCURACY OR COMPLETENESS OF SCANNED COPIES OF THIS PLAN SHEET.

LEGEND:

- CHANNELIZER (SURFACE MOUNTED)
- (X) CONSTRUCTION AREA SIGN No.
- REMOVE THERMOPLASTIC OR PAINTED TRAFFIC STRIPE
- TEMPORARY RAILING (TYPE K)
- TEMPORARY CRASH CUSHION SYSTEM
- Temp CRASH CUSHION (ABSORB 350 TEST LEVEL 2)
- Ip OBJECT MARKER TYPE P (OM-3(L&R))

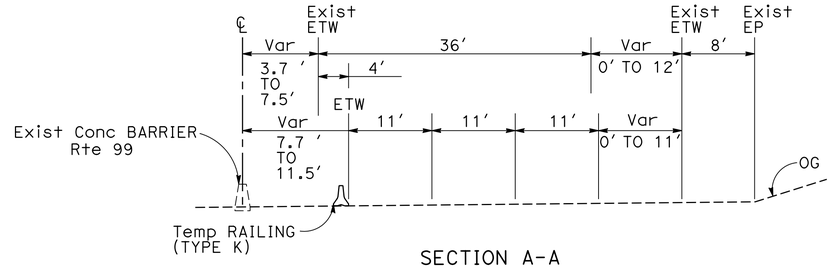

SECTION A-A

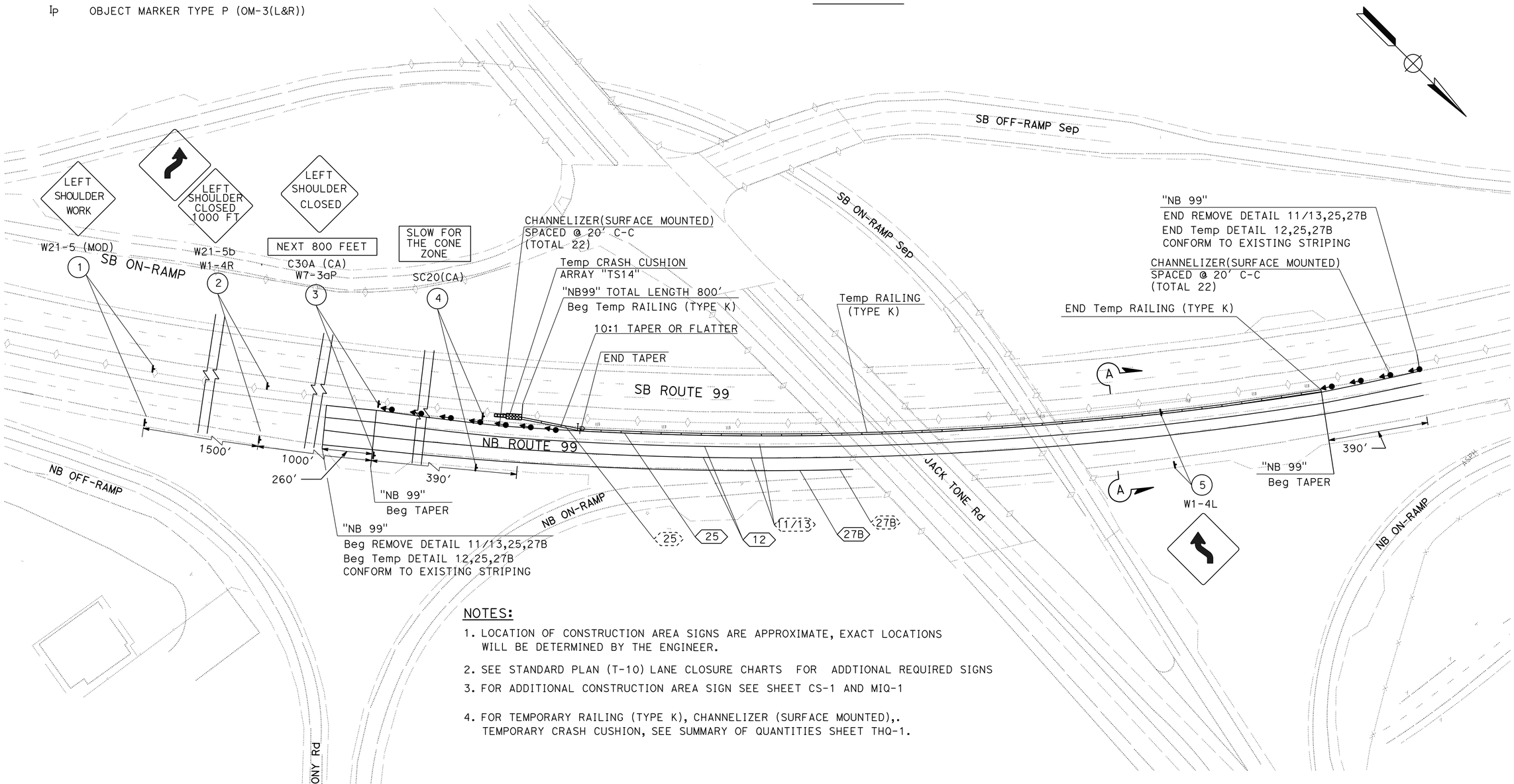

NOTES:

1. LOCATION OF CONSTRUCTION AREA SIGNS ARE APPROXIMATE, EXACT LOCATIONS WILL BE DETERMINED BY THE ENGINEER.
2. SEE STANDARD PLAN (T-10) LANE CLOSURE CHARTS FOR ADDTIONAL REQUIRED SIGNS
3. FOR ADDITIONAL CONSTRUCTION AREA SIGN SEE SHEET CS-1 AND MIQ-1
4. FOR TEMPORARY RAILING (TYPE K), CHANNELIZER (SURFACE MOUNTED),. TEMPORARY CRASH CUSHION, SEE SUMMARY OF QUANTITIES SHEET THQ-1.

APPROVED FOR TRAFFIC HANDLING WORK ONLY

TRAFFIC HANDLING PLAN

NO SCALE

TH-1

STATE OF CALIFORNIA - DEPARTMENT OF TRANSPORTATION
Caltrans® **TRAFFIC DESIGN**

FUNCTIONAL SUPERVISOR: MOHAMMED QATAMI
CALCULATED-DESIGNED BY: GURMIT GILL
CHECKED BY: FAWZI YAGHMOUR
REVISED BY: FAWZI YAGHMOUR
DATE REVISED: 02-22-16

LAST REVISION 07-15-16
DATE PLOTTED => 25-JUL-2016
TIME PLOTTED => 15:14

Dist	COUNTY	ROUTE	POST MILES TOTAL PROJECT	SHEET No.	TOTAL SHEETS
10	SJ	99	0.0/5.7	46	116

REGISTERED CIVIL ENGINEER 4/14/16 DATE

5-2-16
PLANS APPROVAL DATE

REGISTERED PROFESSIONAL ENGINEER FAWZI YAGHMOUR No. 54750 Exp. 12-31-17 CIVIL STATE OF CALIFORNIA

THE STATE OF CALIFORNIA OR ITS OFFICERS OR AGENTS SHALL NOT BE RESPONSIBLE FOR THE ACCURACY OR COMPLETENESS OF SCANNED COPIES OF THIS PLAN SHEET.

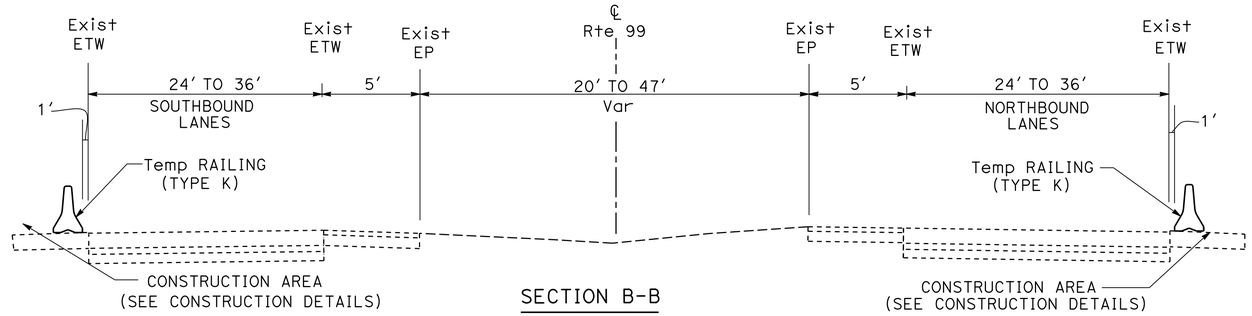

SECTION B-B

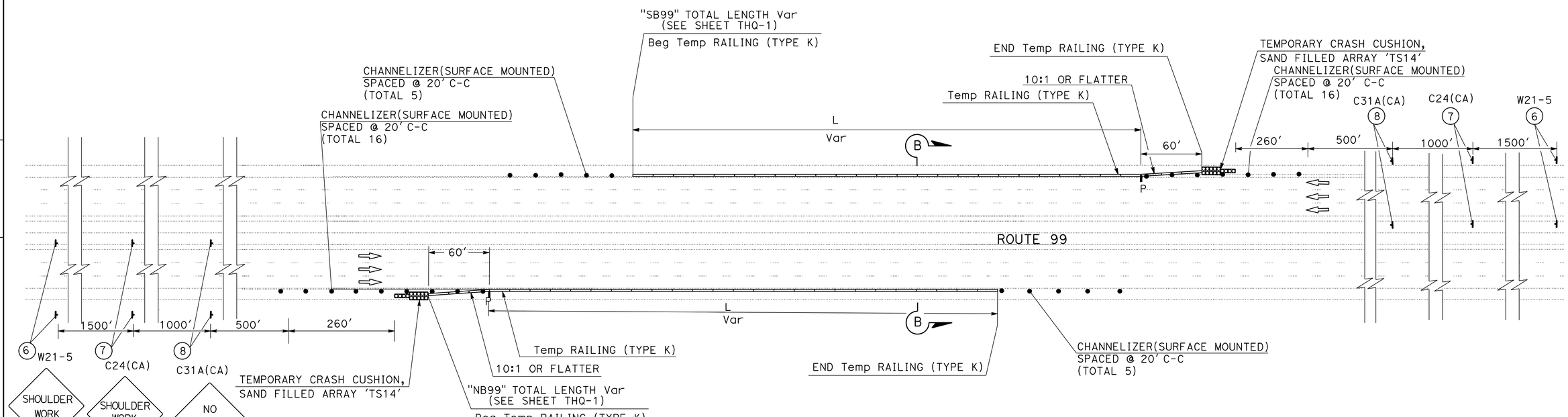

TRAFFIC HANDLING DETAIL FOR MULTIPLE LOCATIONS (Typ)

APPROVED FOR TRAFFIC HANDLING WORK ONLY

TRAFFIC HANDLING PLAN
(MULTIPLE LOCATIONS)

TH-2

NO SCALE

REVISED BY	DATE REVISED
FAWZI YAGHMOUR	02-22-16

GURMIT GILL — FAWZI YAGHMOUR
CALCULATED-DESIGNED BY — CHECKED BY
FUNCTIONAL SUPERVISOR — MOHAMMED QATAMI

STATE OF CALIFORNIA - DEPARTMENT OF TRANSPORTATION
Caltrans® TRAFFIC DESIGN

LAST REVISION 07-15-16 | DATE PLOTTED => 25-JUL-2016 TIME PLOTTED => 15:14

Dist	COUNTY	ROUTE	POST MILES TOTAL PROJECT	SHEET No.	TOTAL SHEETS
10	SJ	99	0.0/5.7	47	116

REGISTERED CIVIL ENGINEER 4/14/16 DATE

5-2-16
PLANS APPROVAL DATE

REGISTERED PROFESSIONAL ENGINEER FAWZI YAGHMOUR No. 54750 Exp. 12-31-17 CIVIL STATE OF CALIFORNIA

THE STATE OF CALIFORNIA OR ITS OFFICERS OR AGENTS SHALL NOT BE RESPONSIBLE FOR THE ACCURACY OR COMPLETENESS OF SCANNED COPIES OF THIS PLAN SHEET.

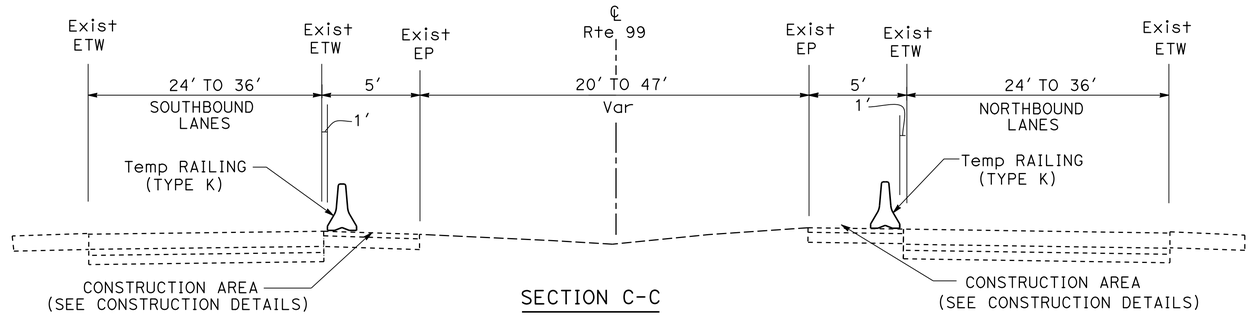

SECTION C-C

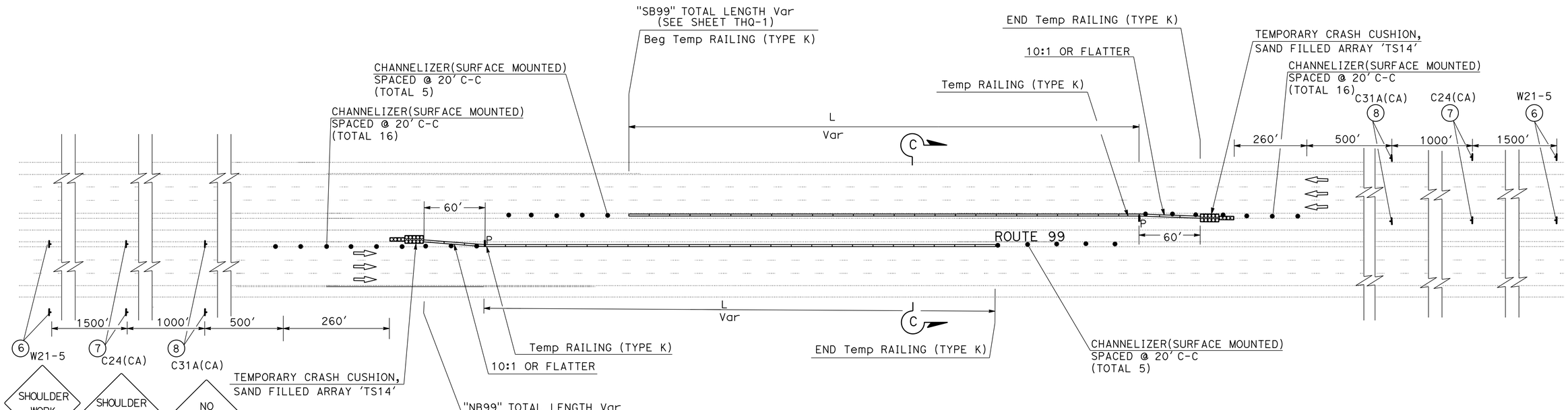

TRAFFIC HANDLING DETAIL FOR MULTIPLE LOCATIONS (Typ)

TRAFFIC HANDLING PLAN
(MULTIPLE LOCATIONS)

APPROVED FOR TRAFFIC HANDLING WORK ONLY

NO SCALE

TH-3

STATE OF CALIFORNIA - DEPARTMENT OF TRANSPORTATION
Caltrans® **TRAFFIC DESIGN**

FUNCTIONAL SUPERVISOR: MOHAMMED QATAMI
CALCULATED-DESIGNED BY: GURMIT GILL
CHECKED BY: FAWZI YAGHMOUR
REVISED BY: FAWZI YAGHMOUR
DATE REVISED: 02-22-16

LAST REVISION 07-15-16
DATE PLOTTED => 25-JUL-2016
TIME PLOTTED => 15:14

Dist	COUNTY	ROUTE	POST MILES TOTAL PROJECT	SHEET No.	TOTAL SHEETS
10	SJ	99	0.0/5.7	48	116

REGISTERED CIVIL ENGINEER 4/14/16 DATE

5-2-16
PLANS APPROVAL DATE

REGISTERED PROFESSIONAL ENGINEER FAWZI YAGHMOUR No. 54750 Exp. 12-31-17 CIVIL STATE OF CALIFORNIA

THE STATE OF CALIFORNIA OR ITS OFFICERS OR AGENTS SHALL NOT BE RESPONSIBLE FOR THE ACCURACY OR COMPLETENESS OF SCANNED COPIES OF THIS PLAN SHEET.

NOTES:

1. FOR ADDITIONAL CONSTRUCTION AREA SIGNS, REFER TO SHEET CS-1 AND MIQ-1.
2. (N) NOT A SEPARATE PAY ITEM, FOR INFORMATION ONLY.
3. * - QUANTITIES INCLUDED IN PAVEMENT DELINEATION TABLE ON PAVEMENT DELINEATION QUANTITIES SHEET PDQ-1.

TRAFFIC HANDLING QUANTITIES

SHEET No.	ROUTE	POST MILES	DIRECTION	LOCATION	TEMPORARY RAILING (TYPE K)	CHANNELIZER (SURFACE MOUNTED)	OBJECT MARKER (TYPE P) (N)	TEMPORARY CRASH CUSHION MODULE TYPE "TS14"
					LF	EA	EA	EA
TH-1	99	2.30	NB	Med	800	44	1	14
TH-1 TO TH-2 (MULTI LOCATIONS)	99	0.23	NB	Med	100	21	1	14
		0.23	SB	Med	100	21	1	14
		0.85	SB	Shld	100	21	1	14
		0.86	NB	Med	560	21	1	14
		0.99	SB	Shld	100	21	1	14
		1.27	NB	Med	100	21	1	14
		1.27	SB	Med	120	21	1	14
		1.96	SB	Med	1060	21	1	14
		2.21	NB	Med	100	21	1	14
		2.30	NB	Med	800	21	1	14
		2.53	NB	Med	100	21	1	14
		2.62	SB	Med	100	21	1	14
		2.71	SB	Med	100	21	1	14
		2.80	NB	Med	100	21	1	14
		2.80	SB	Med	100	21	1	14
		2.80	SB	Med	100	21	1	14
		2.86	SB	Med	100	21	1	14
		2.92	NB	Med	100	21	1	14
		2.92	SB	Med	100	21	1	14
		2.99	NB	Med	240	21	1	14
		2.99	SB	Med	240	21	1	14
		3.93	NB	Med	180	21	1	14
		3.93	SB	Med	180	21	1	14
		4.00	SB	Med	100	21	1	14
		4.06	NB	Med	100	21	1	14
		4.06	SB	Med	540	21	1	14
		4.20	NB	Med	100	21	1	14
		4.20	SB	Med	100	21	1	14
		4.27	SB	Med	100	21	1	14
		4.36	NB	Med	100	21	1	14
		4.36	SB	Med	100	21	1	14
		4.44	SB	Med	100	21	1	14
		4.52	SB	Med	320	21	1	14
		5.10	NB	Shld	100	21	1	14
TOTAL					7440	758		490

TEMPORARY PAVEMENT DELINEATION QUANTITIES

SHEET No.	ROUTE	POSTMILE	DIRECTION	DETAIL No.	TEMPORARY PAVEMENT MARKER TYPE G	TEMPORARY PAVEMENT MARKER TYPE H	REMOVE PAVEMENT MARKER	REMOVE THERMOPLASTIC TRAFFIC STRIPE	REMOVE YELLOW THERMOPLASTIC TRAFFIC STRIPE (HAZARDOUS WASTE)	TEMPORARY TRAFFIC STRIPE (TAPE)
					EA	EA	EA	LF	LF	LF
TH-1	99	2.3	NB	12	79					3,680
				11/13			393	944		
				25		39	39		1,840	1,840
				27B				1,840		1,840
SUBTOTAL					79	39				7,360
TOTAL					118		432*	2,784*	1,840*	7,360

STATIONARY MOUNTED CONSTRUCTION AREA SIGNS (TRAFFIC HANDLING)

SHEET No.	No. OF LOCATION	SIGN No.	SIGN CODE	SIGN MESSAGE	PANEL SIZE	No. OF POST AND SIZE	No. OF SIGNS
TH-1	1	1	W21-5 (Mod)	LEFT SHOULDER WORK	48" x 48"	1 - 6" x 6"	2
		2	W21-5b	LEFT SHOULDER CLOSSED 1000 FEET	48" x 48"	2 - 6" x 6"	2
			W1-4R	MERGE TO RIGHT	48" x 48"		2
		3	C30A (CA)	LEFT SHOULDER CLOSED	48" x 48"	1 - 6" x 6"	2
			W7-3aP	NEXT 800 FEET	24" x 18"		2
		4	SC20(CA)	SLOW FOR CONE ZONE	48" x 48"	1 - 6" x 6"	2
		5	W1-4L	MERGE TO LEFT	48" x 48"	1 - 6" x 6"	2
TH-2 TO TH-3	34	6	W21-5	SHOULDER WORK	48" x 48"	1 - 6" x 6"	68
		7	C24(CA)	SHOULDER WORK AHEAD	48" x 48"	1 - 6" x 6"	68
		8	C31A(CA)	NO SHOULDER	48" x 48"	1 - 6" x 6"	68

TRAFFIC HANDLING QUANTITIES

THQ-1

REVISED BY FAWZI YAGHMOUR | DATE REVISED 02-22-16
GURMIT GILL | FAWZI YAGHMOUR
CALCULATED-DESIGNED BY | CHECKED BY
FUNCTIONAL SUPERVISOR MOHAMMED QATAMI
STATE OF CALIFORNIA - DEPARTMENT OF TRANSPORTATION
Caltrans® TRAFFIC DESIGN

LAST REVISION 07-15-16 | DATE PLOTTED => 25-JUL-2016 TIME PLOTTED => 15:14

Dist	COUNTY	ROUTE	POST MILES TOTAL PROJECT	SHEET No.	TOTAL SHEETS
10	SJ	99	0.0/5.7	49	116

REGISTERED CIVIL ENGINEER 4/14/16 DATE

5-2-16
PLANS APPROVAL DATE

REGISTERED PROFESSIONAL ENGINEER FAWZI YAGHMOUR No. C-54750 Exp. 12/31/17 CIVIL STATE OF CALIFORNIA

THE STATE OF CALIFORNIA OR ITS OFFICERS OR AGENTS SHALL NOT BE RESPONSIBLE FOR THE ACCURACY OR COMPLETENESS OF SCANNED COPIES OF THIS PLAN SHEET.

PAVEMENT DELINEATION QUANTITIES

POST MILE OR LOCATION	DIRECTION	DETAIL No.	PAVEMENT MARKER NON RETRO-REFLECTIVE TYPE A	PAVEMENT MARKER (RETROREFLECTIVE) TYPE C	TYPE D	TYPE G	TYPE H	THERMOPLASTIC TRAFFIC STRIPE (ENHANCED WET NIGHT VISIBILITY) 4" YELLOW	4" WHITE	8" WHITE	REMOVE PAVEMENT MARKER	THERMOPLASTIC PAVEMENT MARKING (ENHANCED WET NIGHT VISIBILITY) ARROW TYPE I	ARROW TYPE II	ARROW TYPE III	ARROW TYPE V	ARROW TYPE VI	CHP MARKING	CROSS WLAK	LIMIT LINE	YIELD	STOP	SIGNAL	AHEAD	REMOVE THERMOPLASTIC PAVEMENT MARKING	REMOVE YELLOW THERMOPLASTIC TRAFFIC STRIPE (HAZARDOUS WASTE)	REMOVE THERMOPLASTIC TRAFFIC STRIPE	DESCRIPTION
			EA	EA	EA	EA	EA	LF	LF	LF	EA	SQFT												SQFT	LF	LF	
0.0/5.7 NB	NB	11/13	5,024			1,256			60,192		6,280													120		15,072	MAIN LINE
		11/13	132			33			1,573		165															393	
		25					628	30,096			628														30,096		
		27B							30,096																	30,096	
0.0/4.9	SB	11/13	4,320			1,080			51,744		5,400						120									12,960	
		25					539	25,872			539														25,872		
		27B							25,872																	25,872	
5.356-5.426	NB															126								126			
5.386-5.436	SB															126								126			
MAIN St	NB	25A					52	1,225			52														1,225		OFF/ON-RAMP
MAIN St	NB	27B							1,225																	1,225	
MAIN St	NB	36				24				528	24	31			99				46		66		31	273		1056	OFF-RAMP
MAIN St	NB	36A				7				137	7															274	ON-RAMP
MAIN St	NB	8							116																	41	
MAIN St	SB	25A					67	1,575			67														1,575		OFF/ON-RAMP
MAIN St	SB	27B							1,575																	1,575	
MAIN St	SB	36				24				528	24		90	84				100			66		31	371		1056	OFF-RAMP
MAIN St	SB	36A				8				174	8															348	ON-RAMP
MAIN St	SB	8							180																	53	
JACK TONE Rd	NB	25A					86	2,044			86														2,044		OFF/ON-RAMP
JACK TONE Rd	NB	27B							2,044																	2,044	
JACK TONE Rd	NB	36				22				475	22	31	90	42	165			120			132		93	673		475	OFF-RAMP
JACK TONE Rd	NB	36A				30				670	30															670	ON-RAMP
JACK TONE Rd	NB	8							533																	162	
JACK TONE Rd	SB	25A					77	1,822			77														1,822		OFF/ON-RAMP
JACK TONE Rd	SB	27B							1,822																	1,822	
JACK TONE Rd	SB	36				24				549	24	31	135	252	99			74	43		132		31	797		1098	OFF-RAMP
JACK TONE Rd	SB	36A				31				697	31															1394	ON-RAMP
JACK TONE Rd	SB	8							216																	70	
AUSTIN Rd	NB	25A					33	751			33														751		OFF/ON-RAMP
AUSTIN Rd	NB	27B							751																	751	
AUSTIN Rd	NB	36				20				444	20	31			66				43		66	32	31	269		888	OFF-RAMP
AUSTIN Rd	NB	36A				11				238	11															476	ON-RAMP
120 W SFO	WB	36				20				400	20															800	OFF-RAMP
FULLTON Ave	NB	27B							1,161																	1,161	OFF/ON-RAMP
FULLTON Ave	NB	25A					50	1,161			50														1,161		
FULLTON Ave	NB	36				24				507	24	31			99				48		66		31	275		1014	OFF-RAMP
FULLTON Ave	NB	36A				5				90	5															180	ON-RAMP
FULLTON Ave	NB	8							69																	27	
0.0/5.7 NB/SB	NB/SB	14		64							64																OFF RAMP
RAMP MAIN St	SB OFF RAMPS									150																150	
RAMP JACK TONE Rd	SB OFF RAMPS									150								78						78		150	
FROM THQ-1	NB										432														1,840	2,784	MAIN LINE
SUBTOTAL			9,476	64		2,619	1,532	64,546	179,169	5,787	14,123	155	315	378	528	252	120	372	180		528	32	248	3,108	66,386	106,137	

PAVEMENT DELINEATION QUANTITIES
PDQ-1

REVISED BY | DATE REVISED
GURMIT GILL | FAWZI YAGHMOUR
CALCULATED-DESIGNED BY | CHECKED BY
FUNCTIONAL SUPERVISOR | MOHAMMED QATAMI

STATE OF CALIFORNIA - DEPARTMENT OF TRANSPORTATION
Caltrans® TRAFFIC DESIGN

LAST REVISION 07-30-16 | DATE PLOTTED => 25-JUL-2016 | TIME PLOTTED => 15:14

Dist	COUNTY	ROUTE	POST MILES TOTAL PROJECT	SHEET No.	TOTAL SHEETS
10	SJ	99	0.0/5.7	50	116

REGISTERED CIVIL ENGINEER 4/14/16 DATE

5-2-16
PLANS APPROVAL DATE

REGISTERED PROFESSIONAL ENGINEER FAWZI YAGHMOUR No. C-54750 Exp. 12/31/17 CIVIL STATE OF CALIFORNIA

THE STATE OF CALIFORNIA OR ITS OFFICERS OR AGENTS SHALL NOT BE RESPONSIBLE FOR THE ACCURACY OR COMPLETENESS OF SCANNED COPIES OF THIS PLAN SHEET.

PAVEMENT DELINEATION QUANTITIES

POST MILE OR LOCATION	DIRECTION	DETAIL No.	PAVEMENT MARKER NON RETRO-REFLECTIVE TYPE A	PAVEMENT MARKER (RETROREFLECTIVE) TYPE C	TYPE D	TYPE G	TYPE H	THERMOPLASTIC TRAFFIC STRIPE (ENHANCED WET NIGHT VISIBILITY) 4" YELLOW	4" WHITE	8" WHITE	REMOVE PAVEMENT MARKER	THERMOPLASTIC PAVEMENT MARKING (ENHANCED WET NIGHT VISIBILITY) ARROW TYPE I	ARROW TYPE II	ARROW TYPE III	ARROW TYPE V	ARROW TYPE VI	CHP MARKING	CROSS WLAK	LIMIT LINE	YIELD	STOP	SIGNAL	AHEAD	REMOVE THERMOPLASTIC PAVEMENT MARKING	REMOVE YELLOW THERMOPLASTIC TRAFFIC STRIPE (HAZARDOUS WASTE)	REMOVE THERMOPLASTIC TRAFFIC STRIPE	DESCRIPTION
			EA	EA	EA	EA	EA	LF	LF	LF	EA	SQFT												SQFT	LF	LF	
S. STOCKTON Ave TO MAIN St OVERHEAD	EB	38				3				42	3															42	MAIN St BETWEEN S. STOCKTON Ave to E. MAIN St
	EB	38				3				42	3															42	
	EB	11/13	88			21			923		109															243	
	WB	11/13	88			21			965		109															243	
	Med	22			48			1,112			48														1,112		
	Med	29			36			1,636			36														1,636		
	EB	27B							586				135	378	198			180	166	48	396		248	1,749		230	
MAIN St OVERCROSSING TO E. MAIN St	EB	38				11				230	11															586	
	Med	29			86			4,020			86														4,020		
	Med	22			16			336			16														336		
	EB	11/13	100			25			1,169		125															304	
	WB	11/13	60			15			651		75															175	
	WB	38				23				518	23															518	
E. MAIN St	WB	38				10				214	10															214	E. MAIN St
	Med	22			8			160			8														160		
SHEET TOTAL			336		194	132		7,264	4,294	1046	662		135	378	198			180	166	48	396		248	1,749	7,264	2,597	
SUBTOTAL PDQ-1			9476	64		2619	1532	64,546	179,169	5787	14,123	155	315	378	528	252	120	372	180		528	32	248	3,108	66,386	106,137	
SHEET SUBTOTAL			9812	64	194	2751	1532	71,810	183,463	6833	14,785	155	450	756	726	252	120	552	346	48	924	32	496	4,857	73,650	108,734	
TOTAL			9812	4541				255,273		6833	14,785	4857												4,857	73,650	108,734	

PAVEMENT DELINEATION QUANTITIES

PDQ-2

REVISED BY | DATE REVISED
GURMIT GILL | FAWZI YAGHMOUR
CALCULATED-DESIGNED BY | CHECKED BY
FUNCTIONAL SUPERVISOR | MOHAMMED QATAMI

STATE OF CALIFORNIA - DEPARTMENT OF TRANSPORTATION
Caltrans TRAFFIC DESIGN

LAST REVISION 07-15-16 | DATE PLOTTED => 25-JUL-2016 | TIME PLOTTED => 15:14

Dist	COUNTY	ROUTE	POST MILES TOTAL PROJECT	SHEET No.	TOTAL SHEETS
10	SJ	99	0.0/5.7	51	116

REGISTERED CIVIL ENGINEER David E. Melis 5/2/16 DATE

5-2-16
PLANS APPROVAL DATE

REGISTERED PROFESSIONAL ENGINEER DAVID E MELIS No. 54383 Exp. 12/31/2017 CIVIL STATE OF CALIFORNIA

THE STATE OF CALIFORNIA OR ITS OFFICERS OR AGENTS SHALL NOT BE RESPONSIBLE FOR THE ACCURACY OR COMPLETENESS OF SCANNED COPIES OF THIS PLAN SHEET.

PAVEMENT STRUCTURE QUANTITIES

DIRECTION	PM	DESCRIPTION	RUBBERIZED HOT MIX ASPHALT (GAP GRADED)	HIGH FRICTION SURFACE TREATMENT	HOT MIX ASPHALT (TYPE A)	TACK COAT	COLD PLANE ASPHALT Conc PAVEMENT
			TON	SQYD	TON	TON	SQYD
NB	0.20/1.74	ROUTE 99 (OVERLAY 0.2')	7,337			16.1	
SB	0.20/1.74	ROUTE 99 (OVERLAY 0.2')	6,921			15.2	
NB	1.74/2.20	ROUTE 99 (OVERLAY 0.15')	1,554			4.5	
SB	1.74/2.20	ROUTE 99 (OVERLAY 0.15')	1,803			5.3	
NB	2.20/2.50	ROUTE 99 (OVERLAY 0.15')	1,231	4,224		6.2	
SB	2.20/2.50	ROUTE 99 (OVERLAY 0.15')	1,049	4,224		5.3	
NB	2.50/5.07	ROUTE 99 (OVERLAY 0.15')	9,777			28.5	
SB	2.50/4.92	ROUTE 99 (OVERLAY 0.15')	9,110			26.6	
NB	5.07/5.60	ROUTE 99 (OVERLAY 0.20')	2,746			6.0	
NB	0.65	NB OFF-RAMP AT MAIN St			234.6	0.6	1,409
SB	0.74	SB ON-RAMP AT MAIN St			244.5	0.7	1,469
NB	0.78	NB ON-RAMP AT MAIN St			137.3	0.4	825
SB	1.08	SB OFF-RAMP AT MAIN St			477.1	1.3	2,865
NB	1.47	NB OFF-RAMP AT FULTON Ave			314.4	0.9	1,888
NB	1.59	NB ON-RAMP AT FULTON Ave			205.5	0.6	1,234
SB	2.11	SB ON-RAMP FROM JACK TONE Rd			412.6	1.1	2,478
SB	2.11	SB ON-RAMP Sep AT JACK TONE Rd			749.7	2.1	4,503
NB	2.17	NB OFF-RAMP TO COLONY Rd			648.0	1.8	3,892
NB	2.30	NB ON-RAMP FROM COLONY Rd		747	561.7	1.5	3,374
NB	2.50	NB ON-RAMP AT JACK TONE Rd			320.1	0.9	1,922
SB	2.58	SB OFF-RAMP AT JACK TONE Rd			674.0	1.9	4,048
NB	4.79	NB OFF-RAMP AT AUSTIN Rd			229.7	0.6	1,380
	SHEET C-11	IN FRONT OF CURB RAMP #1			3.4	0.1	
	SHEET C-12	IN FRONT OF CURB RAMP #2			3.6	0.1	27
	SHEET C-13	IN FRONT OF Conc BARRIER (TRANSITION)			5.6	0.1	
	SHEET C-15	IN FRONT OF CURB RAMP #3			3.6	0.1	
	SHEET C-16	IN FRONT OF CURB RAMP #4			3.1	0.1	
	SHEET C-19	MAIN St - S. STOCKTON Ave TO MAIN St OH			710.1	2.0	4,265
	SHEET C-19	MAIN St - MAIN St OH TO MAIN St OC			126.5	0.3	760
	SHEET C-19	MAIN St - MAIN St OC TO E. MAIN St			1,262.1	3.5	7,580
	SHEET Q-1	CONFORM TAPER					3,093
	SHEET Q-1	DIGOUTS			5,555.6	15.4	33,368
	SHEET Q-1	PLACE HOT MIX ASPHALT DIKE			64.7		
TOTAL			41,528	9,195	12,947.5	149.8	80,380

NOTES:

1. (N) - NOT A SEPARATE PAY ITEM, FOR INFORMATION ONLY.
2. * - SEE PAVEMENT STRUCTURE QUANTITIES FOR TOTAL.

CONFORM TAPER

DIRECTION	PM	DESCRIPTION	COLD PLANE ASPHALT Conc PAVEMENT
			SQYD
NB	0.20	ROUTE 99 (AT STANISLAUS RIVER Br)	623
SB	0.20	ROUTE 99 (AT STANISLAUS RIVER Br)	595
NB	0.65	NB MAIN St OFF-RAMP	67
NB	0.78	NB MAIN St ON-RAMP	67
SB	0.74	SB MAIN St ON-RAMP	67
SB	1.08	SB MAIN St OFF-RAMP	67
NB	1.48	NB FULTON Ave OFF-RAMP	67
NB	1.59	NB FULTON Ave ON-RAMP	67
NB	2.16	NB OFF-RAMP TO COLONY Rd	80
NB	2.30	NB ON-RAMP FROM COLONY Rd	80
NB	2.50	NB ON-RAMP FROM JACK TONE Rd	80
SB	2.11	SB ON-RAMP FROM JACK TONE Rd	80
SB	2.58	SB OFF-RAMP TO JACK TONE Rd	80
NB	4.79	NB OFF-RAMP TO AUSTIN Rd	80
NB	5.03	NB ON-RAMP FROM AUSTIN Rd	80
SB	4.55	SB ON-RAMP FROM AUSTIN Rd	80
NB	5.42	NB ROUTE 99 TO WB ROUTE 120	190
NB	5.60	ROUTE 99	643
TOTAL			3,093*

DIGOUTS

DIRECTION	PM/PM	LANE No. (N)	WIDTH (N)	HOT MIX ASPHALT (TYPE A)	TACK COAT	COLD PLANE ASPHALT Conc PAVEMENT
				TON	TON	SQYD
NB	0.70/1.00	1,2,3	36	1,054.9	2.9	6,336
SB	0.70/1.00	1,2,3	36	1,054.9	2.9	6,336
NB	1.20/1.40	1,2,3	36	703.3	1.9	4,224
SB	1.20/1.40	1,2,3	36	703.3	1.9	4,224
NB	1.67/1.74	1,2,3	36	246.1	0.7	1,478
SB	1.67/1.74	1,2,3	36	246.1	0.7	1,478
NB	2.30/2.42	1,2,3	36	421.9	1.2	2,534
SB	2.30/2.42	1,2,3	36	421.9	1.2	2,534
NB	4.84/4.94	1,2,3	36	351.6	1.0	2,112
SB	4.84/4.94	1,2,3	36	351.6	1.0	2,112
TOTAL				5,555.6*	15.4*	33,368*

DIKE QUANTITIES

Dir	PM/PM	LOCATION	PLACE HMA DIKE (TYPE A)	PLACE HMA DIKE (TYPE C)	PLACE HMA DIKE (TYPE E)	HMA (TYPE A)	REMOVE AC DIKE
			LF	LF	LF	TON	LF
SB	0.20	IN FRONT OF GUARD RAIL		50		0.2	
NB	2.24	NB OFF-RAMP (TO COLONY Rd) INSIDE SHOULDER	130			1.8	130
NB	2.24	NB ON-RAMP (FROM COLONY Rd) INSIDE SHOULDER	130			1.8	130
SB	2.18/2.24	SB ON-RAMP Sep OUTSIDE Shld FROM MVP TO Exist HMA OSD			650	8.5	650
SB	2.19/2.31	SB ON-RAMP AT JACK TONE RD FROM SIDEWALK TO MVP		530	138	3.8	668
SB	2.22/2.38	SB ON-RAMP Sep AT JACK TONE Rd INSIDE Shld FROM Br RAILING TO THE FRONT OF MVP			880	11.4	880
NB	2.25/2.30	NB ON-RAMP FROM COLONY Rd FROM END OF SIDEWALK TO END of MVP			890	11.6	890
SB	2.37/2.43	SB OFF-RAMP TO JACK TONE Rd INSIDE Shld		325		1.2	325
SB	2.40	SB ON-RAMP Sep AT JACK TONE ROAD FROM Conc CURB TO Br RAILING		155		0.6	155
SB	3.19/3.41	SB ROUTE 99			1,162	15.1	1,162
NB	4.75/4.86	NB OFF-RAMP TO AUSTIN Rd FROM STREET LIGHT TO Exist DI			670	8.7	670
TOTAL			260	1,060	4,390	64.7*	5,660

SUMMARY OF QUANTITIES
Q-1

REVISED BY	HR	RAY CHANG	FUNCTIONAL SUPERVISOR
DATE REVISED	02-18-16	DAVID MELIS	CAROLINE REYES
CALCULATED-DESIGNED BY	CHECKED BY		

STATE OF CALIFORNIA - DEPARTMENT OF TRANSPORTATION
Caltrans® DESIGN

LAST REVISION 07-15-16 | DATE PLOTTED => 25-JUL-2016 | TIME PLOTTED => 15:14

Dist	COUNTY	ROUTE	POST MILES TOTAL PROJECT	SHEET No.	TOTAL SHEETS
10	SJ	99	0.0/5.7	52	116

David E. Melis 5/2/16
REGISTERED CIVIL ENGINEER DATE

5-2-16
PLANS APPROVAL DATE

REGISTERED PROFESSIONAL ENGINEER DAVID E MELIS No. 54383 Exp. 12/31/2017 CIVIL STATE OF CALIFORNIA

THE STATE OF CALIFORNIA OR ITS OFFICERS OR AGENTS SHALL NOT BE RESPONSIBLE FOR THE ACCURACY OR COMPLETENESS OF SCANNED COPIES OF THIS PLAN SHEET.

MIDWEST GUARDRAIL SYSTEM

SHEET	No.	PM	DESCRIPTION	REMOVE GUARDRAIL	MGS (WOOD POST)	MGS (STEEL POST)	ALTERNATIVE FLARED TERMINAL SYSTEM	ALTERNATIVE IN-LINE TERMINAL SYSTEM	END ANCHOR ASSEMBLY (TYPE SFT)	END CAP (TYPE A)	TRANSITION RAILING (TYPE WB-31)	LAYOUT TYPE (N)	RUBBER MAT	TREATED WOOD WASTE	CONCRETE BARRIER (TRANSITION)	OBJECT MARKER (TYPE P)	OBJECT MARKER (TYPE L-1)	GUARD RAILING DELINEATOR	NOTES
				LF	LF	LF	EA	EA	EA	EA	EA		SQYD	LB	LF	EA	EA	EA	
C-1	1	0.20/0.22	NORTH OF STANISLAUS RIVER Br	75.00	62.50		1				1	12B	401.2	1,231	3.50	1		4	SEE SHEET C-10 FOR CONNECTION
C-1	2	0.86/0.88	NB UNDER MAIN St OC	162.50	118.75		1		1			16B	526.2	2,379			1	4	
C-1	3	0.87/0.88	SB ON-RAMP AT MAIN St (SE CORNER)	62.50	37.50				1	1		12DD	150.0	1,067	37.50			2	SEE SHEET C-13 FOR DETAILS
C-1	4	0.87/0.89	SB ON-RAMP AT MAIN St (SW CORNER)	81.25	87.50				1	1		12DD	350.0	1,313	3.50			3	SEE SHEET C-14 FOR DETAILS
C-1	5	0.90/0.91	SB OFF-RAMP AT MAIN St	50.00			1				1	12B	151.2	903	3.50		1	3	SEE SHEET C-11 FOR DETAILS
C-2	6	1.30/1.34	NB UNDER ACACIA AVE Ped OC	212.50	212.50		1		1			16B	901.2	3,035			1	6	
C-2	7	1.45/1.47	NB OFF-RAMP TO FULTON Ave	87.50		37.50		1	1			16A	180.2	1,395		1		3	
C-2	8	1.59/1.61	NB ON-RAMP FROM FULTON Ave	87.50		37.50	1		1			16B	201.2	1,395		1		3	
C-2	9	1.66/1.71	NB UNDER FULTON Ave OC	275.00	250.00		1		1			16B	1051.2	3,856			1	7	
C-2	10	1.71/1.73	SB UNDER FULTON Ave OC	131.25	81.25		1		1			16B	376.2	1,969			1	4	
C-3	11	2.00/2.01	SB CONNECT TO Exist Conc BARRIER	62.50			1				1	12B	151.2	1,067	3.50		1	3	SEE SHEET C-9 FOR CONNECTION
C-3	12	2.13/2.15	NB OFF-RAMP TO COLONY Rd (OUTSIDE Shld)	87.50		37.50		1	1			16A	180.2	1,395			1	3	
C-4	13	2.23/2.24	NB OFF-RAMP TO COLONY Rd (INSIDE Shld)	231.25	181.25		1		1			16B	776.2	3,281			1	6	
C-4	14	2.25/2.27	NB ON-RAMP FROM COLONY Rd	118.75	68.75		1		1			16B	326.2	1,805			1	3	
C-4	15	2.36	NE CORNER OF JACK TONE Br	75.00	62.50			1			1	12A	380.2	1,231	3.50			4	SEE SHEET C-9 FOR CONNECTION
C-4	16	2.38	NW CORNER OF JACK TONE Br	75.00	75.00				1	1		12DD	300.0	1,231	3.50		1	3	SEE SHEET C-9 FOR CONNECTION
C-4	17	2.35	SW CORNER OF JACK TONE Br	112.50	112.50					2		12DD	450.2	1,723	7.00			3	SEE SHEET C-9 FOR CONNECTION
C-4	18	2.29/2.33	SB ON-RAMP FROM JACK TONE Rd	237.50	180.50						2	12B	922.0	3,364	7.00			6	SEE SHEET C-9 FOR CONNECTION
C-4	19	2.21/2.31	SB ON-RAMP FROM JACK TONE Rd	537.50	509.00				1	1		12DD	2,036.0	7,301	3.50			11	SEE SHEET C-9 FOR CONNECTION
C-4	20	2.39	SB ON-RAMP Sep FROM JACK TONE Rd (INSIDE Shld)	75.00	75.00		1				1	12B	451.2	1,231	3.50		1	4	SEE SHEET C-9 FOR CONNECTION
C-4	21	2.39/2.41	SB ON-RAMP Sep FROM JACK TONE Rd (AT MVP)	281.25	212.50			1			1	12A	980.2	3,938	3.50			7	SEE SHEET C-9 FOR CONNECTION
C-4	22	2.32/2.38	SB ON-RAMP Sep FROM JACK TONE Rd (OUTSIDE Shld)	518.75	493.75					1	1	12D	2,075.0	7,055	7.00			11	SEE SHEET C-9 FOR CONNECTION
C-4	23	2.41/2.45	NB ON-RAMP FROM JACK TONE Rd	325.00	300.00		1		1			11B	1,251.2	4,512			1	8	
C-4	24	2.37/2.50	OFF-RAMP TO JACK TONE Rd (INSIDE Shld)	725.00	700.00		1				1	12B	2,951.2	9,761	3.50		1	17	SEE SHEET C-9 FOR CONNECTION
C-4	25	2.37/2.47	OFF-RAMP TO JACK TONE Rd (OUTSIDE Shld)	562.50	484.00		1				1	12B	2,087.2	7,629	3.50		1	12	SEE SHEET C-9 FOR CONNECTION
C-6	26	4.08/4.10	SB ROUTE 99	87.50		37.50	1		1			16B	201.2	1,395		1		3	
C-7	27	4.73/4.75	OFF-RAMP TO AUSTIN Rd	87.50		37.50		1	1			16A	180.2	1,395		1		3	
C-7	28	4.87/4.89	UNDER AUSTIN Rd OC	143.75	87.50		1				1	12B	501.2	2,133	9.33		1	4	SEE REVISED Std PLAN A77U3
C-7	29	4.89/4.91	UNDER AUSTIN Rd OC	75.00	37.50		1				1	12B	301.2	1,231	9.33		1	3	SEE REVISED Std PLAN A77U3
C-8	30	5.25/5.30	NEAR SR 120/99 Sep	243.75	193.75		1		1			16B	826.2	3,446		1		6	
TOTAL				5887.50	4623.50	187.50	18	5	17	7	13		21,616.6	84,667	115.66	6	16	159	

SHOULDER RUMBLE STRIP (HMA, GROUND-IN INDENTATIONS)

PM/PM	LOCATION	STATION
0.20/5.60	NB INSIDE SHOULDER	285.1
0.20/1.39	NB OUTSIDE SHOULDER	62.8
1.47/1.58	NB OUTSIDE SHOULDER	5.8
1.71/2.08	NB OUTSIDE SHOULDER	19.5
2.17/2.30	NB OUTSIDE SHOULDER	6.9
2.70/4.66	NB OUTSIDE SHOULDER	103.5
4.80/5.03	NB OUTSIDE SHOULDER	12.1
5.13/5.33	NB OUTSIDE SHOULDER	10.6
5.42/5.59	NB OUTSIDE SHOULDER	9.0
0.20/4.93	SB INSIDE SHOULDER	249.7
0.20/0.57	SB OUTSIDE SHOULDER	19.5
0.75/1.08	SB OUTSIDE SHOULDER	17.4
1.16/1.92	SB OUTSIDE SHOULDER	40.1
2.10/2.58	SB OUTSIDE SHOULDER	25.3
2.70/4.37	SB OUTSIDE SHOULDER	88.2
4.55/4.92	SB OUTSIDE SHOULDER	19.5
	TOTAL	975.0

SHOULDER BACKING

Dir	PM/PM	LOCATION	TON
NB	0.20/5.60	OUTSIDE SHOULDER	682
NB	5.32/5.60	INSIDE SHOULDER	35
SB	0.20/4.92	OUTSIDE SHOULDER	596
		TOTAL	1313

SUMMARY OF QUANTITIES
Q-2

REVISED BY	DATE REVISED
HR	02-18-16
DM	03-21-16
DM	05-23-16

RAY CHANG — DAVID MELIS — CALCULATED-DESIGNED BY — CHECKED BY — FUNCTIONAL SUPERVISOR — CAROLINE REYES

STATE OF CALIFORNIA - DEPARTMENT OF TRANSPORTATION
Caltrans® DESIGN

LAST REVISION 07-15-16 — DATE PLOTTED => 25-JUL-2016 — TIME PLOTTED => 15:14

Dist	COUNTY	ROUTE	POST MILES TOTAL PROJECT	SHEET No.	TOTAL SHEETS
10	SJ	99	0.0/5.7	53	116

REGISTERED CIVIL ENGINEER 5/2/16 DATE

5-2-16
PLANS APPROVAL DATE

REGISTERED PROFESSIONAL ENGINEER DAVID E MELIS No. 54383 Exp 12/31/2017 CIVIL STATE OF CALIFORNIA

THE STATE OF CALIFORNIA OR ITS OFFICERS OR AGENTS SHALL NOT BE RESPONSIBLE FOR THE ACCURACY OR COMPLETENESS OF SCANNED COPIES OF THIS PLAN SHEET.

CONCRETE QUANTITIES

SHEET	No.	DESCRIPTION	MINOR CONCRETE (CURB, SIDEWALK AND CURB RAMP)	REMOVE CONCRETE	ROADWAY EXCAVATION	CLASS 2 AGGREGATE BASE	DETECTABLE WARNING SURFACE	MINOR CONCRETE (TEXTURED PAVING)
			CY	CY	CY	CY	SQFT	CY
C-11	1	MINOR CONCRETE (CURB, SIDEWALK AND CURB RAMP)	3.1	3.1	3.4	3.4	15.0	
C-12	2	MINOR CONCRETE (CURB, SIDEWALK AND CURB RAMP)	3.0	3.0	4.3	4.3	15.0	
C-15	3	MINOR CONCRETE (CURB, SIDEWALK AND CURB RAMP)	4.5	4.5	6.8	6.8	15.0	
C-16	4	MINOR CONCRETE (CURB, SIDEWALK AND CURB RAMP)	5.3	5.3	7.9	7.9	42.0	
C-1	1	MINOR CONCRETE (TEXTURED PAVING)			33.7	33.7		33.7
C-1	2	MINOR CONCRETE (TEXTURED PAVING)			14.1	14.1		14.1
C-1	3	MINOR CONCRETE (TEXTURED PAVING)			40.6	40.6		40.6
C-2	4	MINOR CONCRETE (TEXTURED PAVING)			43.5	43.5		43.5
C-2	5	MINOR CONCRETE (TEXTURED PAVING)			12.6	12.6		12.6
C-3	6	MINOR CONCRETE (TEXTURED PAVING)			50.3	50.3		50.3
C-3	7	MINOR CONCRETE (TEXTURED PAVING)			29.6	29.6		29.6
C-3	8	MINOR CONCRETE (TEXTURED PAVING)			53.6	53.6		53.6
C-4	9	MINOR CONCRETE (TEXTURED PAVING)			8.7	8.7		8.7
C-5	10	MINOR CONCRETE (TEXTURED PAVING)			50.2	50.2		50.2
C-5	11	MINOR CONCRETE (TEXTURED PAVING)			36.6	36.6		36.6
C-7	12	MINOR CONCRETE (TEXTURED PAVING)			74.1	74.1		74.1
C-13		SB ON-RAMP FROM MAIN STREET (SE CORNER)		1.5	2.8			
FROM SHEET DQ-2		REMOVE CONCRETE		17.7				
		TOTAL	15.9	35.1	472.8	470.0	87.0	447.6

RESET ROADSIDE SIGN (ONE POST)

SHEET	EA
C-12	1

RESET BARRICADE

SHEET	EA
C-13	1

ADJUST PULL BOX

SHEET	EA
C-13	3
C-14	2
TOTAL	5

PEDESTRIAN BARRICADE

SHEET	EA
C-12	1

TEMPORARY DRAINAGE INLET PROTECTION

PM/PM	EA
0.0/5.70	72

PRE/POST CONSTRUCTION SURVEYS

SHEET No.	LOCATION	CURB RAMP IDENTIFICATION	NUMBER OF CONSTRUCTION SURVEYS	DESCRIPTION
			EA	
C-1 AND C-11	SB OFF-RAMP AT MAIN St (SW CORNER)	CURB RAMP No. 1	1	CURB RAMP
C-1 AND C-12	SB OFF-RAMP AT MAIN St (NW CORNER)	CURB RAMP No. 2	1	CURB RAMP
C-4 AND C-15	SB ON-RAMP AT JACK TONE Rd (SE CORNER)	CURB RAMP No. 3	1	CURB RAMP
C-4 AND C-16	SB ON-RAMP AT JACK TONE Rd (NE CORNER)	CURB RAMP No. 4	1	CURB RAMP
		TOTAL	4	

SUMMARY OF QUANTITIES
Q-3

DM	05-04-16		
HR	02-18-16		
REVISED BY	DATE REVISED		
RAY CHANG	DAVID MELIS		
CALCULATED-DESIGNED BY	CHECKED BY		
FUNCTIONAL SUPERVISOR	CAROLINE REYES		

STATE OF CALIFORNIA - DEPARTMENT OF TRANSPORTATION
Caltrans
DESIGN

LAST REVISION 07-13-16 DATE PLOTTED => 25-JUL-2016 TIME PLOTTED => 15:14

Dist	COUNTY	ROUTE	POST MILES TOTAL PROJECT	SHEET No.	TOTAL SHEETS
10	SJ	99	0.0/5.7	54	116

REGISTERED ELECTRICAL ENGINEER 5/2/16 DATE

5-2-16
PLANS APPROVAL DATE

REGISTERED PROFESSIONAL ENGINEER Jaspal Singh No. E16657 Exp. 6/30/18 ELECTRICAL STATE OF CALIFORNIA

THE STATE OF CALIFORNIA OR ITS OFFICERS OR AGENTS SHALL NOT BE RESPONSIBLE FOR THE ACCURACY OR COMPLETENESS OF SCANNED COPIES OF THIS PLAN SHEET.

LEGEND:

1. Exist MODEL 2070E CONTROLLER ASSEMBLY WITH A MODEL 334L CABINET FOR TMS.
2. Exist TYPE C TELEPHONE DEMARCATION CABINET.
3. AB Exist LOOP DETECTORS AND INSTALL LOOP DETECTORS AS SHOWN. SEE IDENTIFICATION AND PLACEMENT DETAIL ON DETAIL A THIS SHEET.
4. Exist 120/240 V, 1Ø, 3-WIRE, TYPE III-AF SERVICE EQUIPMENT ENCLOSURE.
5. Exist 4"C, HDPE, PT, COMMUNICATION CONDUIT UNDERNEATH THE CONCRETE BARRIER.
6. Exist 4"C, HDPE, PT, COMMUNICATION CONDUIT.
7. Exist MODEL 2070E CONTROLLER ASSEMBLY FOR RMS.
8. Exist LOOP DETECTORS SYSTEM TO REMAIN IN PLACE.
9. ADJUST PULL BOX TO FG.
10. RC Exist PBA. INSTALL APS FOR Ø2P.
11. RC Exist PSF. INSTALL PSF AND APS CABLE.
12. Exist 2"C, 1-9CSC, 4 DLC
13. Exist 2"C, PT
14. Exist 3"C, 3#1/0 (SERVICE)
15. Exist 3"C, 2#10 (IISNS), 2#8 (Ltg), 1-3CSC, 2-9CSC, 4 DLC, 1 EVUC
16. Exist 3"C, 2#10 (IISNS), 2#8 (Ltg), 2-3CSC, 3-9CSC, 4 DLC, 1 EVUC
17. Exist 2"C, 2#6 (SIGNAL), 2#8 (Ltg), 2#10 (IISNS)
18. Exist 2-3½"C, 2#6 (SIGNAL), 2-3CSC, 7-9CSC, 1-12CSC, 12 DLC, 3 EVUC
19. Exist 7'-0" TYPE 1-A POLE.
20. Exist 120/240 V,1Ø, 3-WIRE, TYPE III-AF SERVICE EQUIPMENT ENCLOSURE.
21. Exist MODEL 170E CONTROLLER ASSEMBLY WITH A MODEL 332L CABINET.

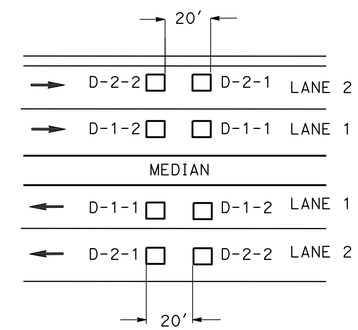

LOOP DETECTOR SENSOR DESIGNATION

D-L-N

- DIRECTION OF TRAFFIC
  - N - NORTHBOUND
  - S - SOUTHBOUND
  - E - EASTBOUND
  - W - WESTBOUND
- 1 - LEADING
  2 - TRAILING
- LANE NUMBER

TYPICAL LOOP DETECTOR PLACEMENT AND DESIGNATION DETAIL A

ABBREVIATIONS:

PG&E - PACIFIC GAS AND ELECTRIC COMPANY
PSF - PEDESTRIAN SIGNAL FACE

LEGEND, ABBREVIATIONS AND DETAILS

E-1

REVISED BY	JR
DATE REVISED	04-22-16
CALCULATED-DESIGNED BY	JORGE RAMIREZ
CHECKED BY	JASPAL SINGH
FUNCTIONAL SUPERVISOR	ALI BAKHDOUD

STATE OF CALIFORNIA - DEPARTMENT OF TRANSPORTATION
Caltrans ELECTRICAL DESIGN

LAST REVISION 07-15-16 | DATE PLOTTED => 25-JUL-2016 | TIME PLOTTED => 15:14

Dist	COUNTY	ROUTE	POST MILES TOTAL PROJECT	SHEET No.	TOTAL SHEETS
10	SJ	99	0.0/5.7	55	116

REGISTERED ELECTRICAL ENGINEER 5/2/16 DATE

5-2-16
PLANS APPROVAL DATE

REGISTERED PROFESSIONAL ENGINEER JASPAL SINGH No. 16657 Exp 6/30/18 ELECTRICAL STATE OF CALIFORNIA

THE STATE OF CALIFORNIA OR ITS OFFICERS OR AGENTS SHALL NOT BE RESPONSIBLE FOR THE ACCURACY OR COMPLETENESS OF SCANNED COPIES OF THIS PLAN SHEET.

NOTES:

1. FOR ACCURATE RIGHT OF WAY DATA, CONTACT RIGHT OF WAY ENGINEERING AT THE DISTRICT OFFICE.
2. ALL PULL BOXES MUST BE No. 5(T) UNLESS OTHERWISE NOTED.

MODIFYING TRAFFIC MONITORING STATION

MODIFYING EXISTING ELECTRICAL SYSTEM

NO SCALE

E-2

APPROVED FOR ELECTRICAL WORK ONLY

STATE OF CALIFORNIA - DEPARTMENT OF TRANSPORTATION
Caltrans® ELECTRICAL DESIGN

FUNCTIONAL SUPERVISOR: ALI BAKHDOUD
CALCULATED-DESIGNED BY: JORGE RAMIREZ
CHECKED BY: JASPAL SINGH
REVISED BY: JR
DATE REVISED: 04-22-16

LAST REVISION DATE PLOTTED => 07-15-16
TIME PLOTTED =>

Dist	COUNTY	ROUTE	POST MILES TOTAL PROJECT	SHEET No.	TOTAL SHEETS
10	SJ	99	0.0/5.7	56	116

REGISTERED ELECTRICAL ENGINEER 5/2/16 DATE

5-2-16
PLANS APPROVAL DATE

REGISTERED PROFESSIONAL ENGINEER JASPAL SINGH No. 16657 Exp. 6/30/18 ELECTRICAL STATE OF CALIFORNIA

THE STATE OF CALIFORNIA OR ITS OFFICERS OR AGENTS SHALL NOT BE RESPONSIBLE FOR THE ACCURACY OR COMPLETENESS OF SCANNED COPIES OF THIS PLAN SHEET.

NOTES:

1. FOR ACCURATE RIGHT OF WAY DATA, CONTACT RIGHT OF WAY ENGINEERING AT THE DISTRICT OFFICE.
2. ALL PULL BOXES MUST BE No. 5(T) UNLESS OTHERWISE NOTED.

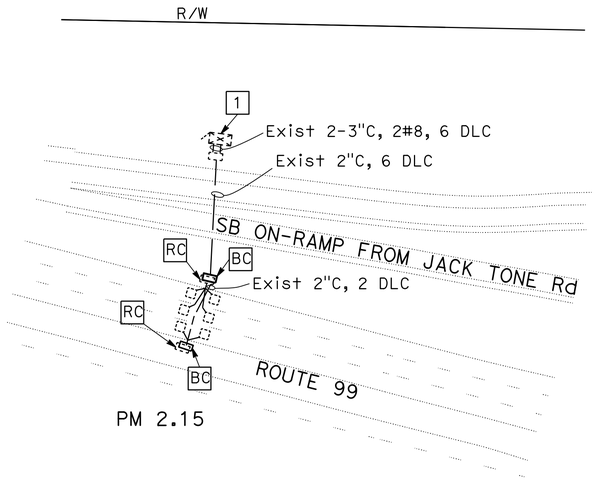

PM 2.15

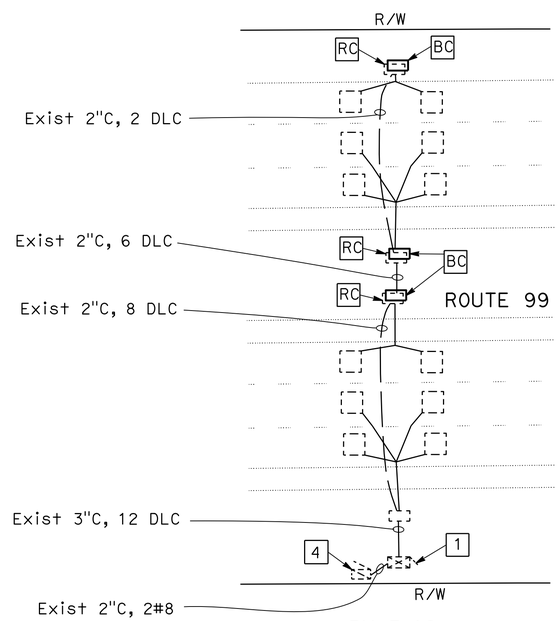

PM 3.19

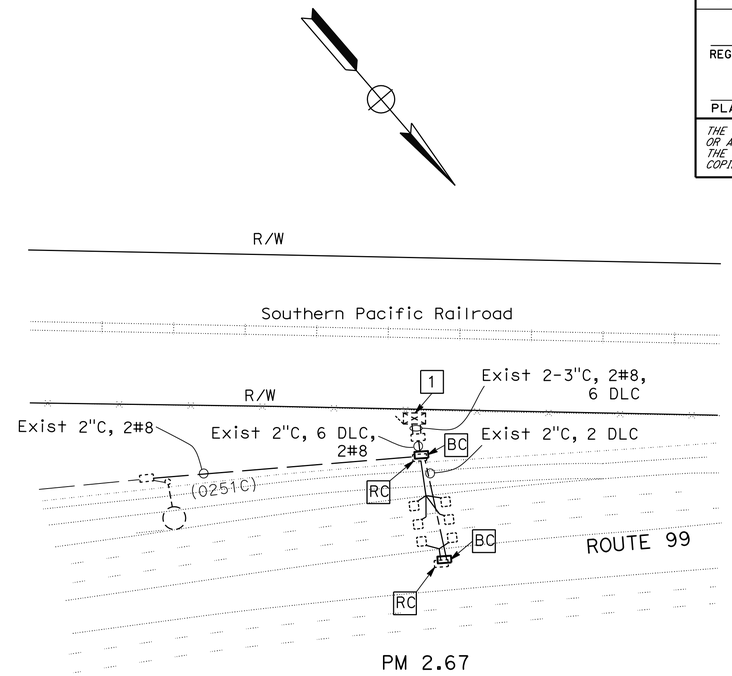

PM 2.67

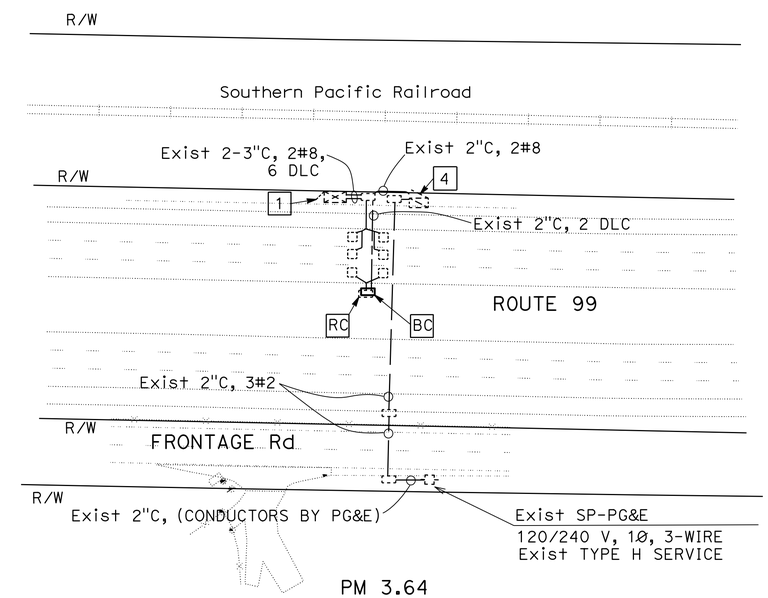

PM 3.64

MODIFYING TRAFFIC MONITORING STATION

MODIFYING EXISTING ELECTRICAL SYSTEM

NO SCALE

E-3

APPROVED FOR ELECTRICAL WORK ONLY

REVISED BY	DATE REVISED
JR	04-22-16

CALCULATED-DESIGNED BY: JORGE RAMIREZ
CHECKED BY: JASPAL SINGH
FUNCTIONAL SUPERVISOR: ALI BAKHDOUD

STATE OF CALIFORNIA - DEPARTMENT OF TRANSPORTATION
Caltrans® ELECTRICAL DESIGN

LAST REVISION 07-15-16 | DATE PLOTTED => | TIME PLOTTED =>

Dist	COUNTY	ROUTE	POST MILES TOTAL PROJECT	SHEET No.	TOTAL SHEETS
10	SJ	99	0.0/5.7	57	116

REGISTERED ELECTRICAL ENGINEER 5/2/16 DATE

5-2-16
PLANS APPROVAL DATE

REGISTERED PROFESSIONAL ENGINEER JASPAL SINGH No. 16657 Exp. 6/30/18 ELECTRICAL STATE OF CALIFORNIA

THE STATE OF CALIFORNIA OR ITS OFFICERS OR AGENTS SHALL NOT BE RESPONSIBLE FOR THE ACCURACY OR COMPLETENESS OF SCANNED COPIES OF THIS PLAN SHEET.

NOTES:

1. FOR ACCURATE RIGHT OF WAY DATA, CONTACT RIGHT OF WAY ENGINEERING AT THE DISTRICT OFFICE.
2. ALL PULL BOXES MUST BE No. 5(T) UNLESS OTHERWISE NOTED.

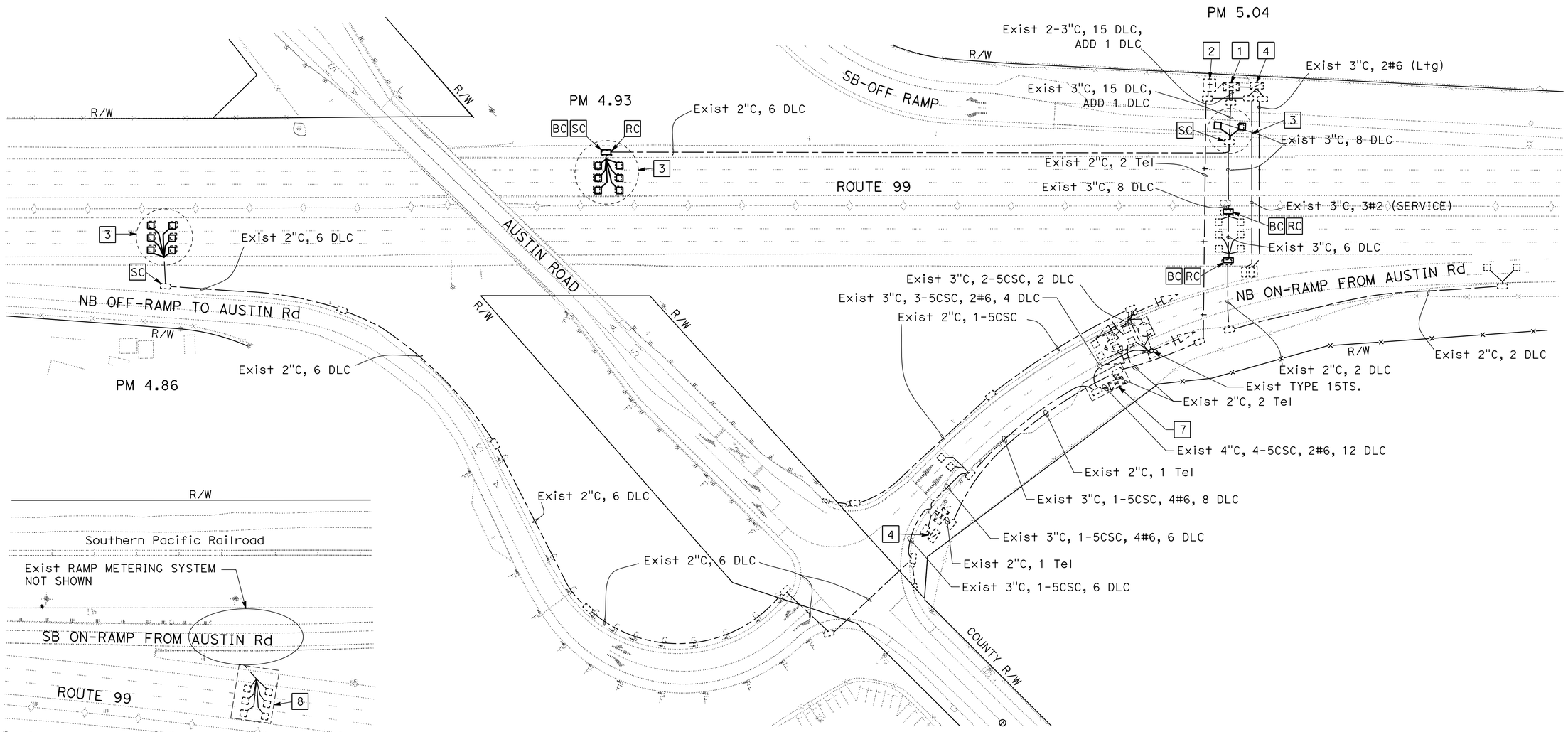

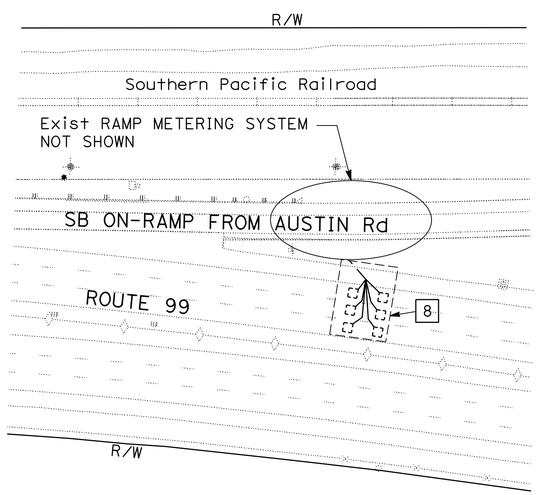

MODIFYING TRAFFIC MONITORING STATION

MODIFYING EXISTING ELECTRICAL SYSTEM

E-4

APPROVED FOR ELECTRICAL WORK ONLY

SCALE: 1"=50'

STATE OF CALIFORNIA - DEPARTMENT OF TRANSPORTATION
Caltrans® **ELECTRICAL DESIGN**

FUNCTIONAL SUPERVISOR: ALI BAKHDOUD
CALCULATED-DESIGNED BY: JORGE RAMIREZ
CHECKED BY: JASPAL SINGH
REVISED BY: JR
DATE REVISED: 04-2-16

LAST REVISION 07-15-16
DATE PLOTTED =>
TIME PLOTTED =>

Dist	COUNTY	ROUTE	POST MILES TOTAL PROJECT	SHEET No.	TOTAL SHEETS
10	SJ	99	0.0/5.7	58	116

REGISTERED ELECTRICAL ENGINEER 5/2/16 DATE

5-2-16
PLANS APPROVAL DATE

REGISTERED PROFESSIONAL ENGINEER JASPAL SINGH No. 16657 Exp. 6/30/18 ELECTRICAL STATE OF CALIFORNIA

THE STATE OF CALIFORNIA OR ITS OFFICERS OR AGENTS SHALL NOT BE RESPONSIBLE FOR THE ACCURACY OR COMPLETENESS OF SCANNED COPIES OF THIS PLAN SHEET.

NOTES:

1. FOR ACCURATE RIGHT OF WAY DATA, CONTACT RIGHT OF WAY ENGINEERING AT THE DISTRICT OFFICE.
2. ALL PULL BOXES MUST BE No. 5(T) UNLESS OTHERWISE NOTED.

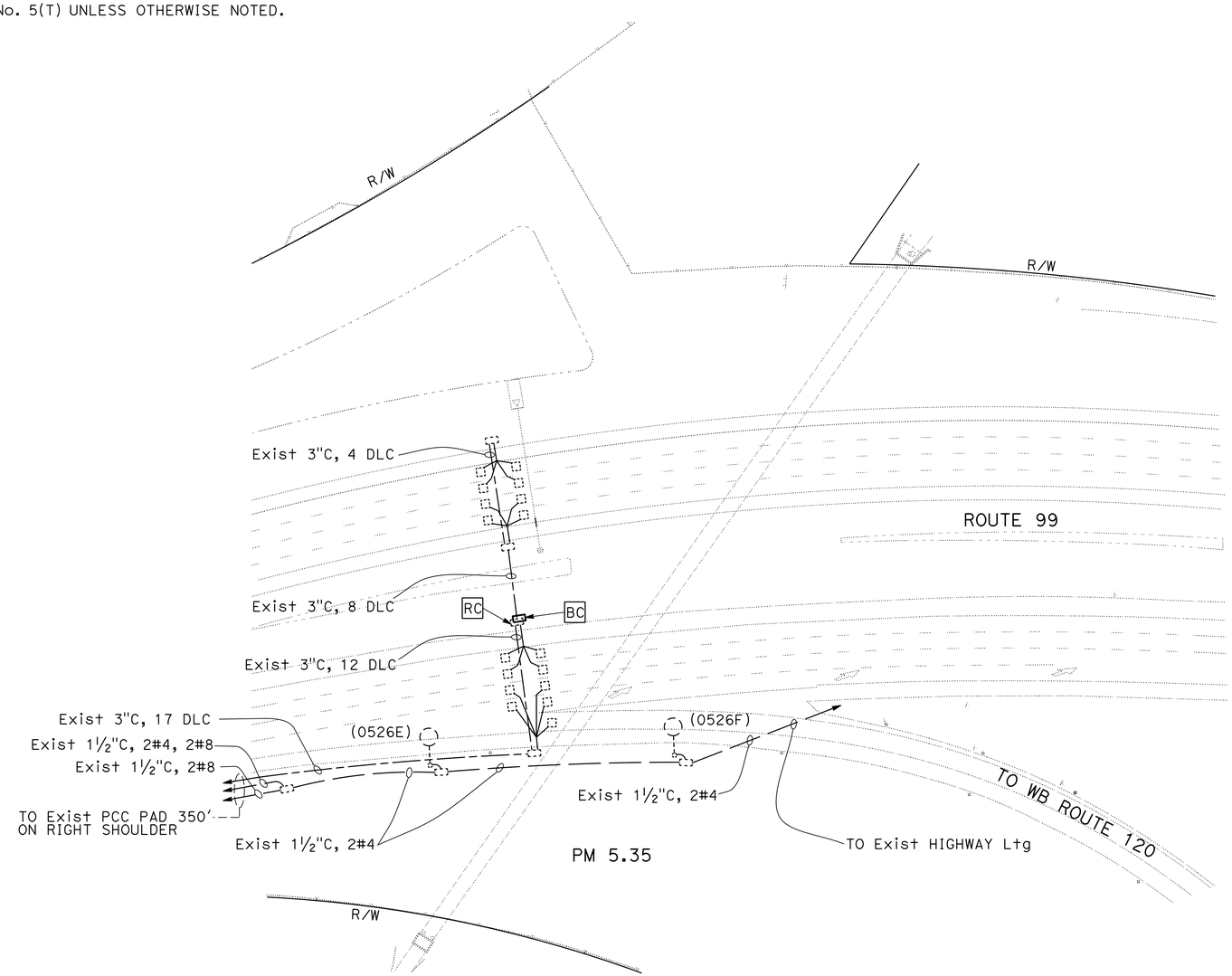

MODIFYING TRAFFIC MONITORING STATION

MODIFYING EXISTING ELECTRICAL SYSTEM

NO SCALE

E-5

APPROVED FOR ELECTRICAL WORK ONLY

STATE OF CALIFORNIA - DEPARTMENT OF TRANSPORTATION
Caltrans® **ELECTRICAL DESIGN**

FUNCTIONAL SUPERVISOR: ALI BAKHDOUD
CALCULATED-DESIGNED BY: JORGE RAMIREZ
CHECKED BY: JASPAL SINGH
REVISED BY: JR
DATE REVISED: 04-22-16

LAST REVISION 07-15-16
DATE PLOTTED =>
TIME PLOTTED =>

Dist	COUNTY	ROUTE	POST MILES TOTAL PROJECT	SHEET No.	TOTAL SHEETS
10	SJ	99	0.0/5.7	59	116

REGISTERED ELECTRICAL ENGINEER 5/2/16 DATE

5-2-16
PLANS APPROVAL DATE

REGISTERED PROFESSIONAL ENGINEER JASPAL SINGH No. 16657 Exp. 6/30/18 ELECTRICAL STATE OF CALIFORNIA

THE STATE OF CALIFORNIA OR ITS OFFICERS OR AGENTS SHALL NOT BE RESPONSIBLE FOR THE ACCURACY OR COMPLETENESS OF SCANNED COPIES OF THIS PLAN SHEET.

NOTES:

1. FOR ACCURATE RIGHT OF WAY DATA, CONTACT RIGHT OF WAY ENGINEERING AT THE DISTRICT OFFICE.
2. EXISTING SIGNAL SYSTEM NOT SHOWN ON THIS PLAN.

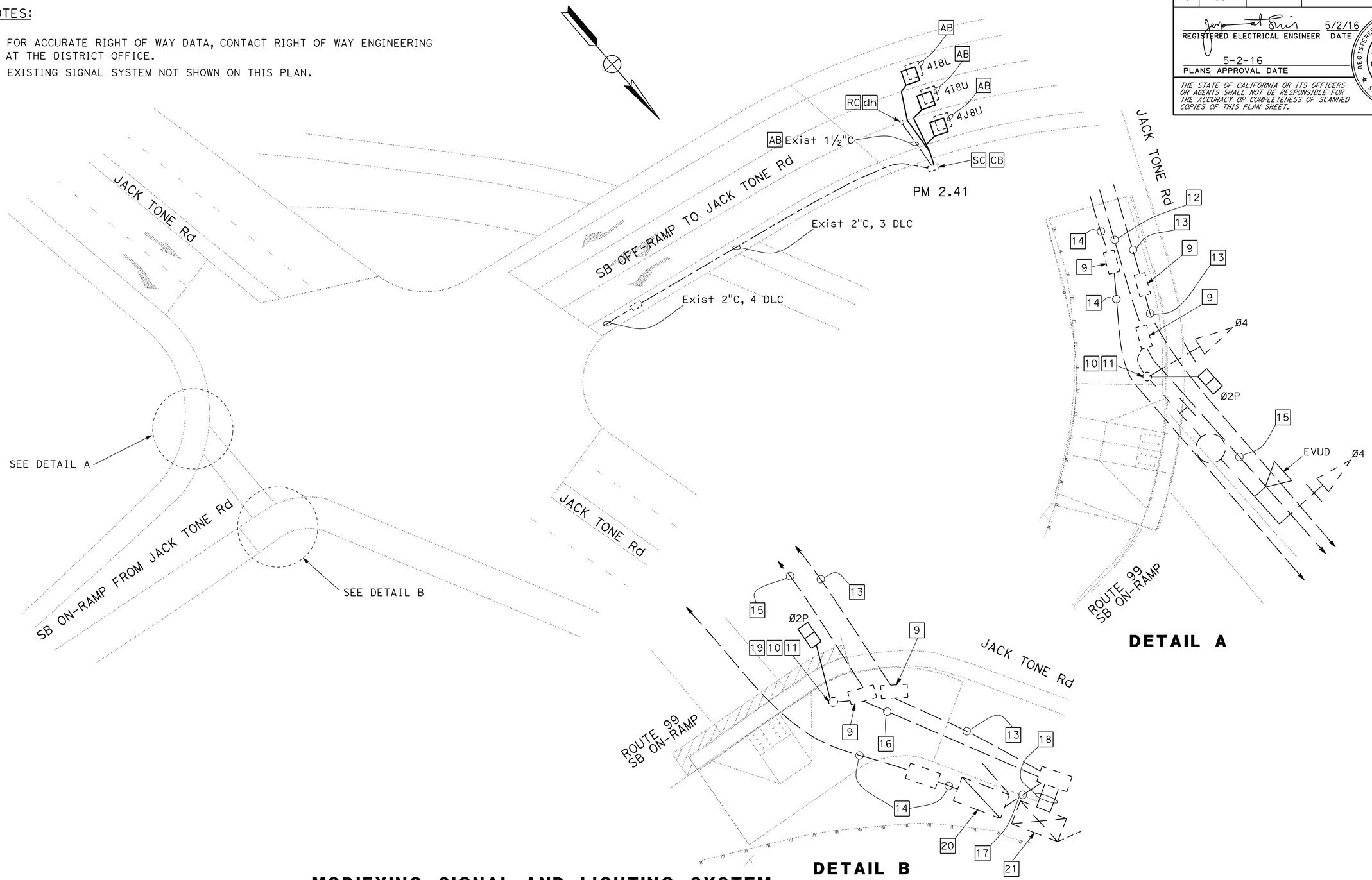

MODIFYING SIGNAL AND LIGHTING SYSTEM

MODIFYING EXISTING ELECTRICAL SYSTEM

APPROVED FOR ELECTRICAL WORK ONLY

NO SCALE

E-6

REVISED BY	DATE REVISED
JR	04-22-16

JORGE RAMIREZ — JASPAL SINGH

CALCULATED-DESIGNED BY — CHECKED BY

FUNCTIONAL SUPERVISOR: ALI BAKHDOUD

STATE OF CALIFORNIA - DEPARTMENT OF TRANSPORTATION

Caltrans® **ELECTRICAL DESIGN**

LAST REVISION 07-15-16 | DATE PLOTTED => | TIME PLOTTED =>

Dist	COUNTY	ROUTE	POST MILES TOTAL PROJECT	SHEET No.	TOTAL SHEETS
10	SJ	99	0.0/5.7	60	116

REGISTERED ELECTRICAL ENGINEER 5/2/16 DATE

5-2-16
PLANS APPROVAL DATE

REGISTERED PROFESSIONAL ENGINEER JASPAL SINGH No. 16657 Exp. 6/30/18 ELECTRICAL STATE OF CALIFORNIA

THE STATE OF CALIFORNIA OR ITS OFFICERS OR AGENTS SHALL NOT BE RESPONSIBLE FOR THE ACCURACY OR COMPLETENESS OF SCANNED COPIES OF THIS PLAN SHEET.

NOTES:

1. FOR ACCURATE RIGHT OF WAY DATA, CONTACT RIGHT OF WAY ENGINEERING AT THE DISTRICT OFFICE.

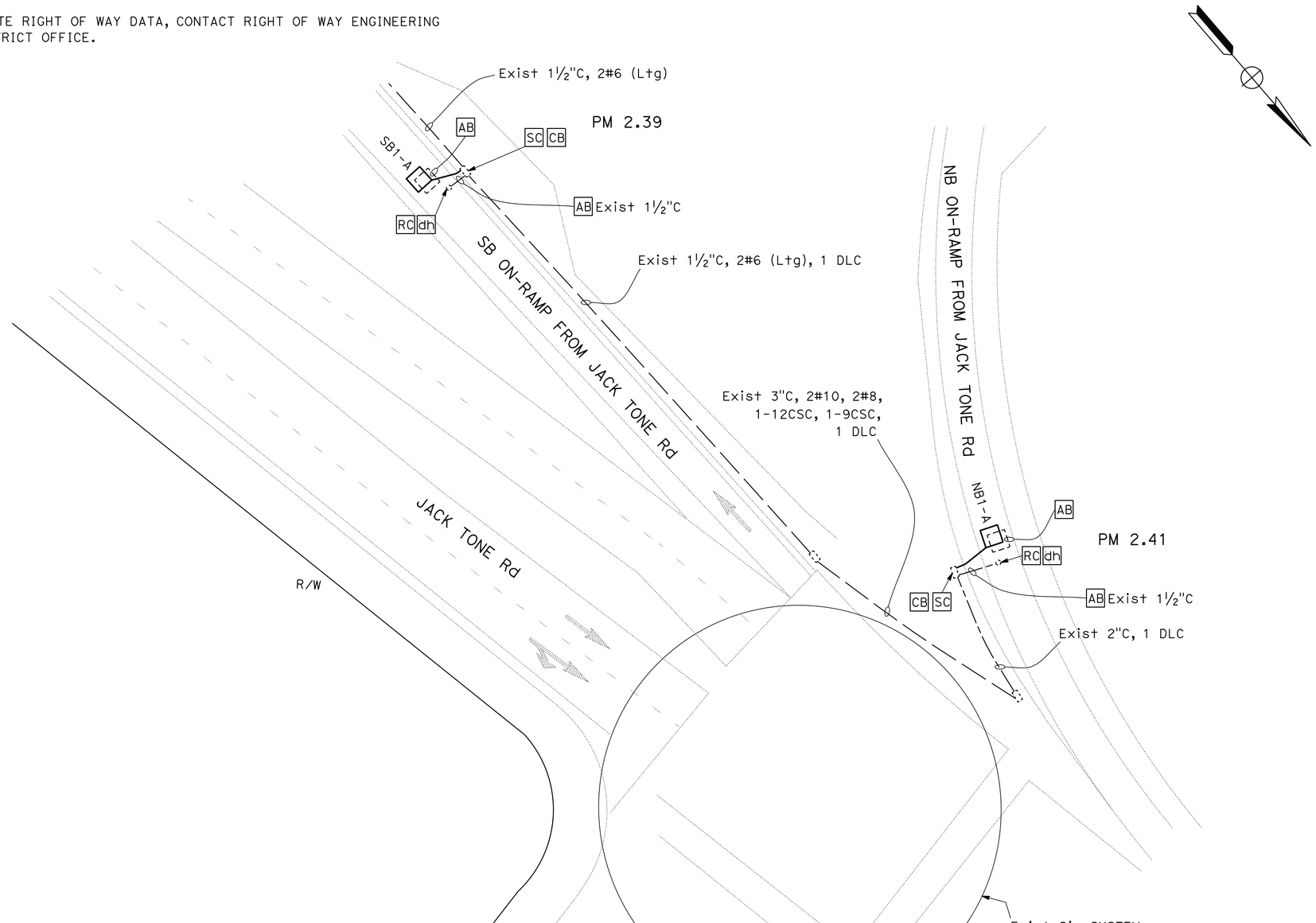

MODIFYING SIGNAL AND LIGHTING SYSTEM

MODIFYING EXISTING ELECTRICAL SYSTEM

NO SCALE **E-7**

APPROVED FOR ELECTRICAL WORK ONLY

JORGE RAMIREZ	JASPAL SINGH	REVISED BY	JR
		DATE REVISED	04-22-16
CALCULATED-DESIGNED BY			
CHECKED BY			
FUNCTIONAL SUPERVISOR	ALI BAKHDOUD		

STATE OF CALIFORNIA - DEPARTMENT OF TRANSPORTATION
Caltrans® **ELECTRICAL DESIGN**

LAST REVISION 07-15-16 | DATE PLOTTED => | TIME PLOTTED =>

Dist	COUNTY	ROUTE	POST MILES TOTAL PROJECT	SHEET No.	TOTAL SHEETS
10	SJ	99	0.0/5.7	61	116

REGISTERED ELECTRICAL ENGINEER 5/2/16 DATE

5-2-16
PLANS APPROVAL DATE

REGISTERED PROFESSIONAL ENGINEER JASPAL SINGH No. 16657 Exp. 6/30/18 ELECTRICAL STATE OF CALIFORNIA

THE STATE OF CALIFORNIA OR ITS OFFICERS OR AGENTS SHALL NOT BE RESPONSIBLE FOR THE ACCURACY OR COMPLETENESS OF SCANNED COPIES OF THIS PLAN SHEET.

NOTES:

1. FOR ACCURATE RIGHT OF WAY DATA, CONTACT RIGHT OF WAY ENGINEERING AT THE DISTRICT OFFICE.

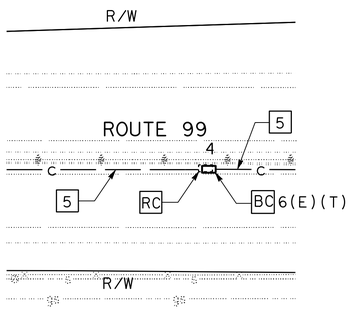

PM 0.45

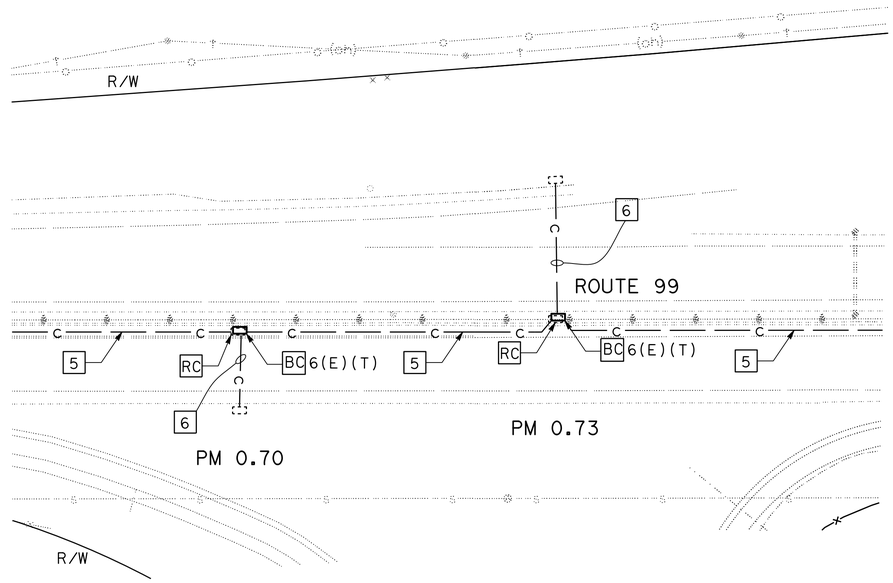

PM 0.70

PM 0.73

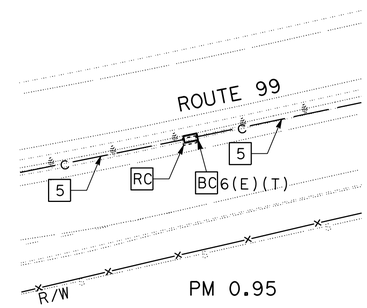

PM 0.95

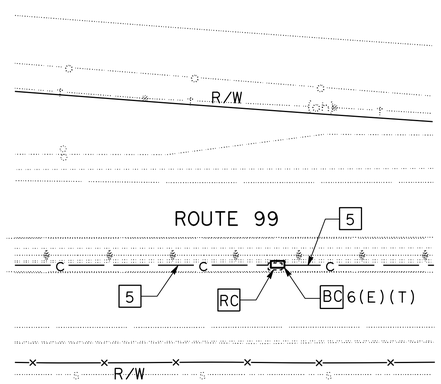

PM 1.20

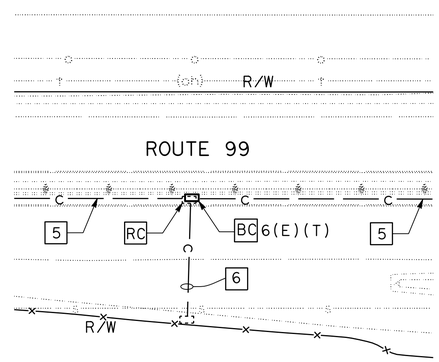

PM 1.44

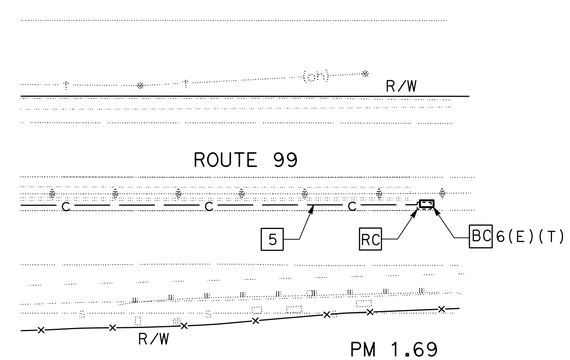

PM 1.69

MODIFYING COMMUNICATION PULL BOX

MODIFYING EXISTING ELECTRICAL SYSTEM

NO SCALE

E-8

APPROVED FOR ELECTRICAL WORK ONLY

STATE OF CALIFORNIA - DEPARTMENT OF TRANSPORTATION
Caltrans® ELECTRICAL DESIGN

FUNCTIONAL SUPERVISOR: ALI BAKHDOUD
CALCULATED-DESIGNED BY: JORGE RAMIREZ
CHECKED BY: JASPAL SINGH
REVISED BY: JR
DATE REVISED: 04-22-16

LAST REVISION DATE PLOTTED => 07-15-16
TIME PLOTTED =>

Dist	COUNTY	ROUTE	POST MILES TOTAL PROJECT	SHEET No.	TOTAL SHEETS
10	SJ	99	0.0/5.7	62	116

REGISTERED ELECTRICAL ENGINEER 5/2/16 DATE

5-2-16
PLANS APPROVAL DATE

REGISTERED PROFESSIONAL ENGINEER JASPAL SINGH No. 16657 Exp. 6/30/18 ELECTRICAL STATE OF CALIFORNIA

THE STATE OF CALIFORNIA OR ITS OFFICERS OR AGENTS SHALL NOT BE RESPONSIBLE FOR THE ACCURACY OR COMPLETENESS OF SCANNED COPIES OF THIS PLAN SHEET.

NOTE:

THE QUANTITIES SHOWN IN TABLES ARE NOT SEPARATE PAY ITEMS, FOR INFORMATION ONLY.

MODIFYING EXISTING ELECTRICAL SYSTEM

SYSTEM	SHEET No.	TYPE A LOOP DETECTORS	No. 5(T) PB	No. 6(E)(T) PB	APS	PSF	DLC	APS CABLE
		EA					LF	
MODIFYING TRAFFIC MONITORING STATION	E-2	18	5	-	-	-	-	-
	E-3	-	8	-	-	-	-	-
	E-4	14	3	-	-	-	100	-
	E-5	-	1	-	-	-	-	-
MODIFYING SIGNAL AND LIGHTING SYSTEM	E-6	3	-	-	2	2	-	20
	E-7	2	-	-	-	-	-	-
MODIFYING COMMUNICATION PULL BOX	E-8	-	-	7	-	-	-	-

ELECTRICAL QUANTITIES

E-9

STATE OF CALIFORNIA - DEPARTMENT OF TRANSPORTATION
Caltrans® ELECTRICAL DESIGN

FUNCTIONAL SUPERVISOR: ALI BAKHDOUD
CALCULATED-DESIGNED BY: JORGE RAMIREZ
CHECKED BY: JASPAL SINGH
REVISED BY: JR
DATE REVISED: 04-22-16

LAST REVISION 07-15-16
DATE PLOTTED =>
TIME PLOTTED =>

M

Maint	MAINTENANCE
Max	MAXIMUM
MB	METAL BEAM
MBB	METAL BEAM BARRIER
MBGR	METAL BEAM GUARD RAILING
Med	MEDIAN
MGS	MIDWEST GUARDRAIL SYSTEM
MH	MANHOLE
Min	MINIMUM
Misc	MISCELLANEOUS
Misc I & S	MISCELLANEOUS IRON AND STEEL
Mkr	MARKER
Mod	MODIFIED,
	MODIFY
Mon	MONUMENT
MP	METAL PLATE
MPGR	METAL PLATE GUARD RAILING
MR	MOVEMENT RATING
MSE	MECHANICALLY STABILIZED EMBANKMENT
Mt	MOUNTAIN, MOUNT
Mtl	MATERIAL
MVP	MAINTENANCE VEHICLE PULLOUT

N

N	NORTH
NB	NORTHBOUND
No.	NUMBER (MUST HAVE PERIOD)
Nos.	NUMBERS (MUST HAVE PERIOD)
NPS	NOMINAL PIPE SIZE
NS	NEAR SIDE
NSP	NEW STANDARD PLAN
NTS	NOT TO SCALE

O

Oblr	OBLITERATE
OC	OVERCROSSING
OD	OUTSIDE DIAMETER
OF	OUTSIDE FACE
OG	ORIGINAL GROUND
OGAC	OPEN GRADED ASPHALT CONCRETE
OGFC	OPEN GRADED FRICTION COURSE
OH	OVERHEAD
OHWM	ORDINARY HIGH WATER MARK
O-O	OUT TO OUT
Opp	OPPOSITE
OSD	OVERSIDE DRAIN

P

P	PAGE
PAP	PERFORATED ALUMINUM PIPE
PB	PULL BOX
PC	POINT OF CURVATURE,
	PRECAST
PCC	POINT OF COMPOUND CURVE,
	PORTLAND CEMENT CONCRETE
PCMS	PORTABLE CHANGEABLE MESSAGE SIGN
PCP	PERFORATED CONCRETE PIPE,
	PRESTRESSED CONCRETE PIPE
PCVC	POINT OF COMPOUND VERTICAL CURVE
PEC	PERMIT TO ENTER AND CONSTRUCT
Ped	PEDESTRIAN
Ped OC	PEDESTRIAN OVERCROSSING
Ped UC	PEDESTRIAN UNDERCROSSING
Perm Mtl	PERMEABLE MATERIAL

P continued

PG	PROFILE GRADE
PI	POINT OF INTERSECTION
PJP	PARTIAL JOINT PENETRATION
Pkwy	PARKWAY
₱,PL	PLATE
P/L	PROPERTY LINE
PM	POST MILE,
	TIME FROM NOON TO MIDNIGHT
PN	PAVING NOTCH
POC	POINT OF HORIZONTAL CURVE
POT	POINT OF TANGENT
POVC	POINT OF VERTICAL CURVE
PP	PIPE PILE,
	PLASTIC PIPE,
	POWER POLE
PPL	PREFORMED PERMEABLE LINER
PPP	PERFORATED PLASTIC PIPE
PRC	POINT OF REVERSE CURVE
PRF	PAVEMENT REINFORCING FABRIC
PRVC	POINT OF REVERSE VERTICAL CURVE
PS&E	PLANS, SPECIFICATIONS AND ESTIMATES
PS, P/S	PRESTRESSED
PSP	PERFORATED STEEL PIPE
PT	POINT OF TANGENCY
PVC	POLYVINYL CHLORIDE
Pvmt	PAVEMENT

Q

Qty	QUANTITY

R

R	RADIUS
R & D	REMOVE AND DISPOSE
R & S	REMOVE AND SALVAGE
R/C	RATE OF CHANGE
RCA	REINFORCED CONCRETE ARCH
RCB	REINFORCED CONCRETE BOX
RCP	REINFORCED CONCRETE PIPE
RCPA	REINFORCED CONCRETE PIPE ARCH
Rd	ROAD
Reinf	REINFORCED,
	REINFORCEMENT,
	REINFORCING
Rel	RELOCATE
Repl	REPLACEMENT
Ret	RETAINING
Rev	REVISED, REVISION
Rdwy	ROADWAY
RHMA	RUBBERIZED HOT MIX ASPHALT
Riv	RIVER
RM	ROAD-MIXED
RP	RADIUS POINT,
	REFERENCE POINT
RR	RAILROAD
RSP	ROCK SLOPE PROTECTION,
	REVISED STANDARD PLAN
Rt	RIGHT
Rte	ROUTE
RW	REDWOOD,
	RETAINING WALL
R/W	RIGHT OF WAY
Rwy	RAILWAY

S

S	SOUTH,
	SUPPLEMENT
SAE	STRUCTURE APPROACH EMBANKMENT
Salv	SALVAGE
SAPP	STRUCTURAL ALUMINUM PLATE PIPE
SB	SOUTHBOUND
SC	SAND CUSHION
SCSP	SLOTTED CORRUGATED STEEL PIPE
SD	STORM DRAIN
Sec	SECOND,
	SECTION
Sep	SEPARATION
SG	SUBGRADE
Shld	SHOULDER
Sht	SHEET
Sim	SIMILAR
₤	STATION LINE
SM	SELECTED MATERIAL
Spec	SPECIAL,
	SPECIFICATIONS
SPP	SLOTTED PLASTIC PIPE
SS	SLOPE STAKE
SSBM	STRAP AND SADDLE BRACKET METHOD
SSD	STRUCTURAL SECTION DRAIN
SSPA	STRUCTURAL STEEL PLATE ARCH
SSPP	STRUCTURAL STEEL PLATE PIPE
SSPPA	STRUCTURAL STEEL PLATE PIPE ARCH
SSRP	STEEL SPIRAL RIB PIPE
St	STREET
Sta	STATION
STBB	SINGLE THRIE BEAM BARRIER
Std	STANDARD
Str	STRUCTURE
Surf	SURFACING
SW	SIDEWALK,
	SOUND WALL
Swr	SEWER
Sym	SYMMETRICAL
S4S	SURFACE 4 SIDES

T

T	SEMI-TANGENT
Tan	TANGENT
TBB	THRIE BEAM BARRIER
Tbr	TIMBER
TC	TOP OF CURB
TCB	TRAFFIC CONTROL BOX
TCE	TEMPORARY CONSTRUCTION EASEMENT
Tel	TELEPHONE
Temp	TEMPORARY
TG	TOP OF GRADE
Tot	TOTAL
TP	TELEPHONE POLE
TPB	TREATED PERMEABLE BASE
TPM	TREATED PERMEABLE MATERIAL
Trans	TRANSITION

T continued

TS	TRANSVERSE,
	TRAFFIC SIGNAL,
	TUBULAR STEEL
Typ	TYPICAL

U

UC	UNDERCROSSING
UD	UNDERDRAIN
UG	UNDERGROUND
UON	UNLESS OTHERWISE NOTED
UP	UNDERPASS

V

V	VALVE,
	DESIGN SPEED
Var	VARIABLE,
	VARIES
VC	VERTICAL CURVE
VCP	VITRIFIED CLAY PIPE
Vert	VERTICAL
Via	VIADUCT
Vol	VOLUME

W

W	WEST,
	WIDTH
WB	WESTBOUND
WH	WEEP HOLE
WM	WIRE MESH
WS	WATER SURFACE
WSP	WELDED STEEL PIPE
Wt	WEIGHT
WV	WATER VALVE
WW	WINGWALL
WWLOL	WINGWALL LAYOUT LINE

X

X Sec	CROSS SECTION
Xing	CROSSING

Y

Yr	YEAR
Yrs	YEARS

Dist	COUNTY	ROUTE	POST MILES TOTAL PROJECT	SHEET No.	TOTAL SHEETS
10	SJ	99	0.0/5.7	63	116

Grace M. Tsushima
REGISTERED CIVIL ENGINEER

July 19, 2013
PLANS APPROVAL DATE

REGISTERED PROFESSIONAL ENGINEER
Grace M. Tsushima
No. C49814
Exp. 9-30-14
CIVIL
STATE OF CALIFORNIA

THE STATE OF CALIFORNIA OR ITS OFFICERS OR AGENTS SHALL NOT BE RESPONSIBLE FOR THE ACCURACY OR COMPLETENESS OF SCANNED COPIES OF THIS PLAN SHEET.

TO ACCOMPANY PLANS DATED 5-2-16

UNIT OF MEASUREMENT SYMBOLS:

Some of the symbols used in the project plan quantity tables and in the Bid Item List are:

TABLE A

SYMBOL USED	DEFINITIONS
ACRE	ACRE
CF	CUBIC FOOT
CY	CUBIC YARD
EA	EACH
GAL	GALLON
LB	POUND
LF	LINEAR FOOT
SQFT	SQUARE FOOT
SQYD	SQUARE YARD
STA	100 FEET
TAB	TABLET
TON	2,000 POUNDS

Some of the symbols used in the plans other than in the project plan quantity tables are:

TABLE B

SYMBOL USED	DEFINITIONS
ksi	KIPS PER SQUARE INCH
ksf	KIPS PER SQUARE FOOT
psi	POUNDS PER SQUARE INCH
psf	POUNDS PER SQUARE FOOT
lb/ft^3, pcf	POUNDS PER CUBIC FOOT
tsf	TONS PER SQUARE FOOT
mph, MPH *	MILES PER HOUR
ø	NOMINAL DIAMETER
oz	OUNCE
lb	POUND
kip	1,000 POUNDS
cal	CALORIE
ft	FOOT OR FEET
gal	GALLON

* For use on a sign panel only

STATE OF CALIFORNIA
DEPARTMENT OF TRANSPORTATION

ABBREVIATIONS (SHEET 2 OF 2)

NO SCALE

RSP A10B DATED JULY 19, 2013 SUPERSEDES STANDARD PLAN A10B DATED MAY 20, 2011 - PAGE 2 OF THE STANDARD PLANS BOOK DATED 2010.

REVISED STANDARD PLAN RSP A10B

2010 REVISED STANDARD PLAN RSP A10B

6-7-13

Dist	COUNTY	ROUTE	POST MILES TOTAL PROJECT	SHEET No.	TOTAL SHEETS
	SJ	99	0.0/5.7	64	116

REGISTERED CIVIL ENGINEER

July 19, 2013
PLANS APPROVAL DATE

REGISTERED PROFESSIONAL ENGINEER Roberta L. McLaughlin No. C40375 Exp. 3-31-15 CIVIL STATE OF CALIFORNIA

THE STATE OF CALIFORNIA OR ITS OFFICERS OR AGENTS SHALL NOT BE RESPONSIBLE FOR THE ACCURACY OR COMPLETENESS OF SCANNED COPIES OF THIS PLAN SHEET.

TO ACCOMPANY PLANS DATED 5-2-16

EXIT RAMP NEUTRAL AREA (GORE) TREATMENT

DETAIL 36

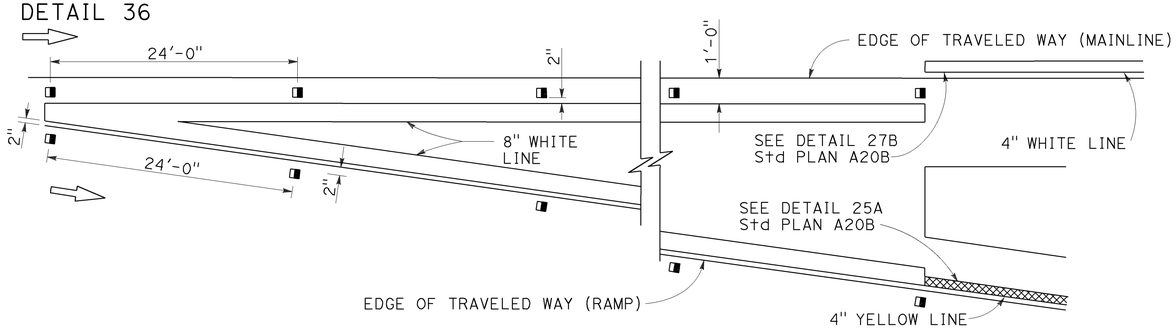

ENTRANCE RAMP NEUTRAL AREA (MERGE) TREATMENT

DETAIL 36A

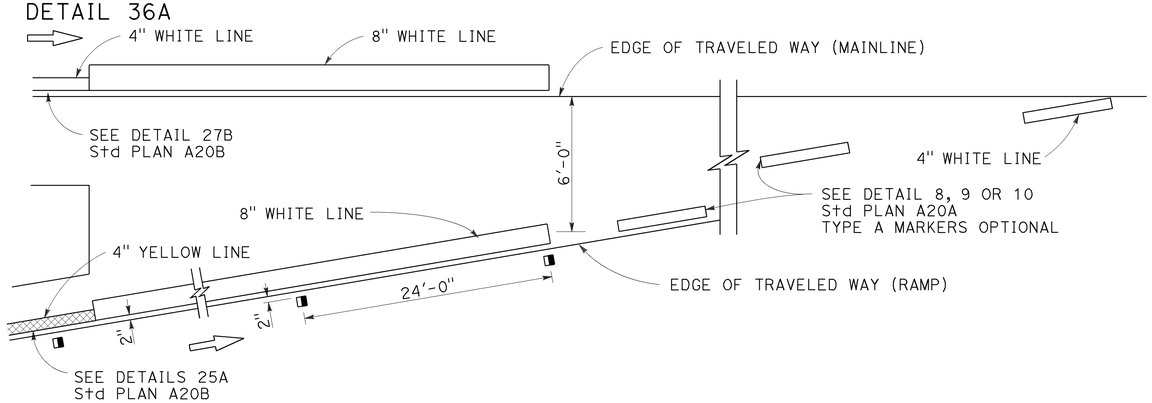

ENTRANCE RAMP NEUTRAL AREA (ACCELERATION LANE) TREATMENT

DETAIL 36B

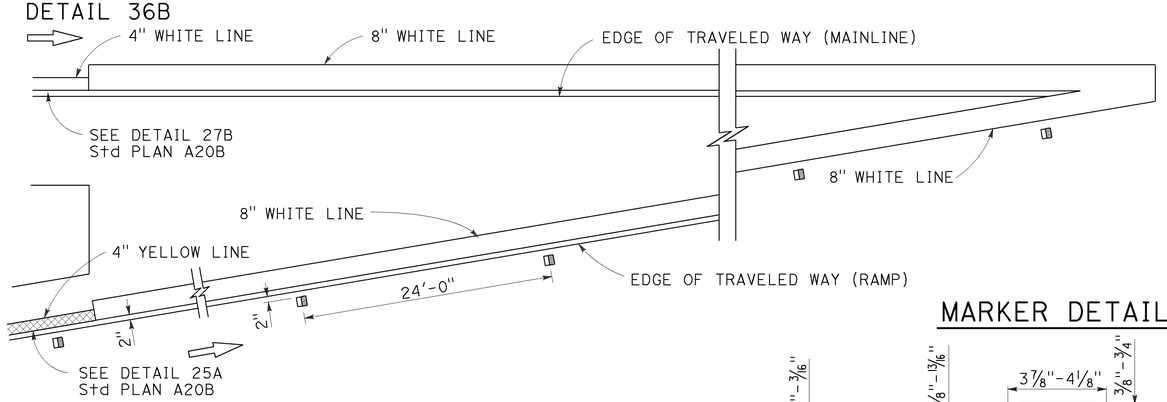

LANE DROP AT EXIT RAMPS

DETAIL 37

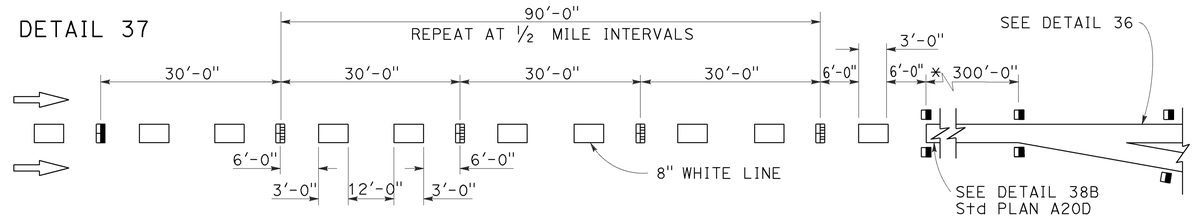

DETAIL 37A

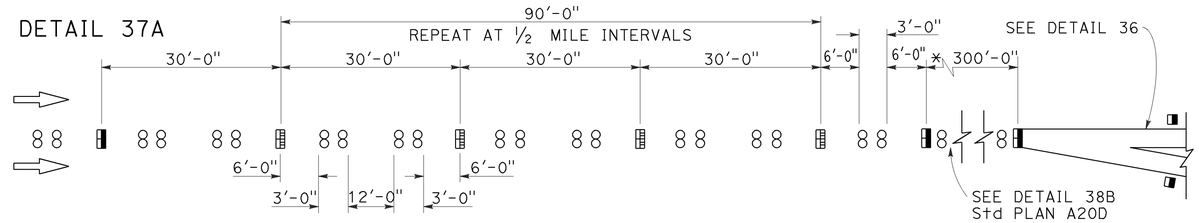

* The solid channelizing line shown may be omitted on short auxiliary lanes where weaving length is critical.

LANE DROP AT INTERSECTIONS

DETAIL 37B

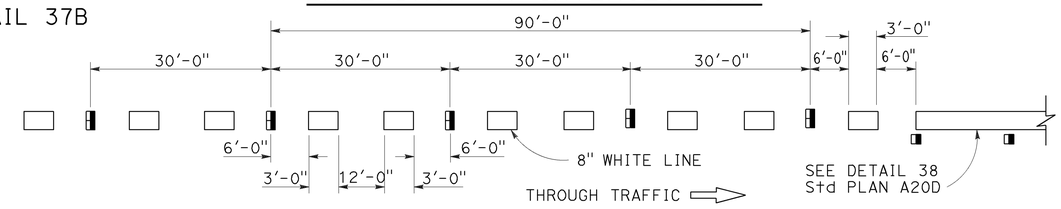

DETAIL 37C

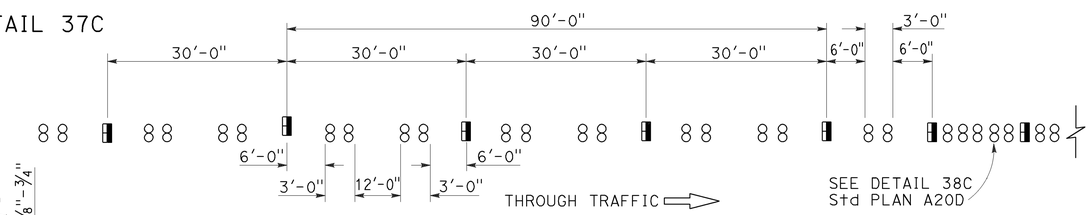

MARKER DETAILS

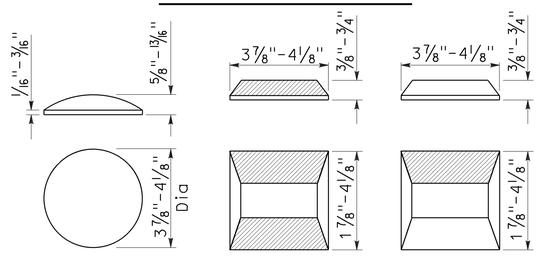

RETROREFLECTIVE FACE

LEGEND:

MARKERS

- ○ TYPE A WHITE NON-REFLECTIVE
- TYPE C RED-CLEAR RETROREFLECTIVE
- TYPE G ONE-WAY CLEAR RETROREFLECTIVE

STATE OF CALIFORNIA
DEPARTMENT OF TRANSPORTATION

PAVEMENT MARKERS AND TRAFFIC LINE TYPICAL DETAILS

NO SCALE

RSP A20C DATED JULY 19, 2013 SUPERSEDES STANDARD PLAN A20C DATED MAY 20, 2011 - PAGE 11 OF THE STANDARD PLANS BOOK DATED 2010.

REVISED STANDARD PLAN RSP A20C

2010 REVISED STANDARD PLAN RSP A20C

4-29-13

Dist	COUNTY	ROUTE	POST MILES TOTAL PROJECT	SHEET No.	TOTAL SHEETS
10	SJ	99	0.0/5.7	65	116

REGISTERED CIVIL ENGINEER

April 20, 2012
PLANS APPROVAL DATE

REGISTERED PROFESSIONAL ENGINEER
Roberta L. McLaughlin
No. C40375
Exp. 3-31-13
CIVIL
STATE OF CALIFORNIA

THE STATE OF CALIFORNIA OR ITS OFFICERS OR AGENTS SHALL NOT BE RESPONSIBLE FOR THE ACCURACY OR COMPLETENESS OF SCANNED COPIES OF THIS PLAN SHEET.

TO ACCOMPANY PLANS DATED 5-2-16

2010 REVISED STANDARD PLAN RSP A24A

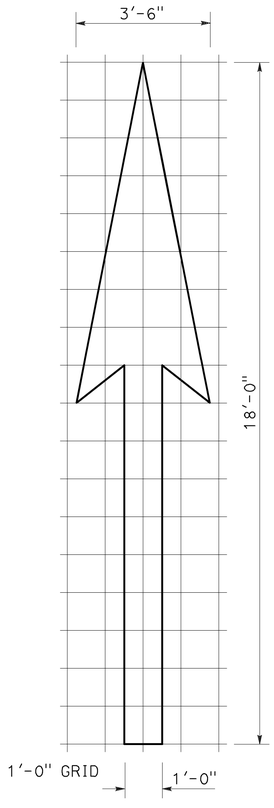

A=25 ft^2

TYPE I 18'-0" ARROW

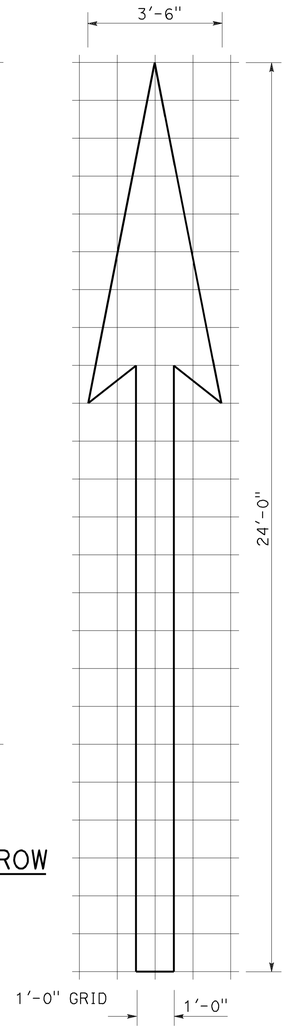

A=31 ft^2

TYPE I 24'-0" ARROW

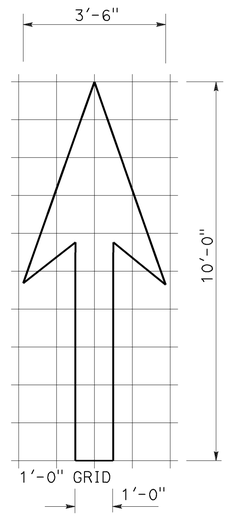

A=14 ft^2

TYPE I 10'-0" ARROW

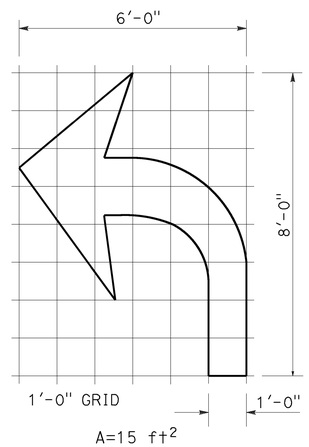

A=15 ft^2

TYPE IV (L) ARROW

(For Type IV (R) arrow, use mirror image)

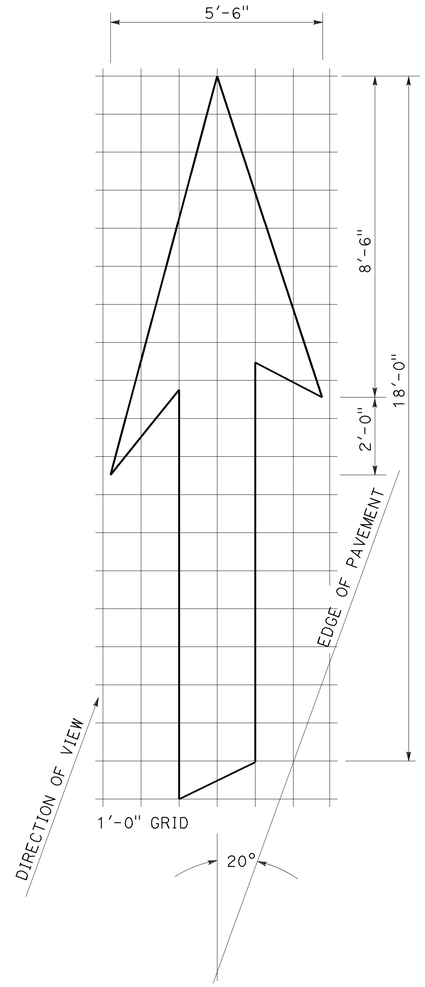

A=42 ft^2

TYPE VI ARROW

Right lane drop arrow
(For left lane, use mirror image)

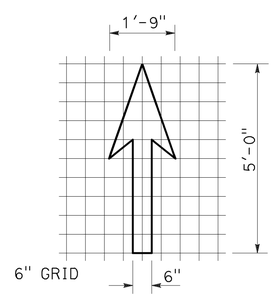

A=3.5 ft^2

BIKE LANE ARROW

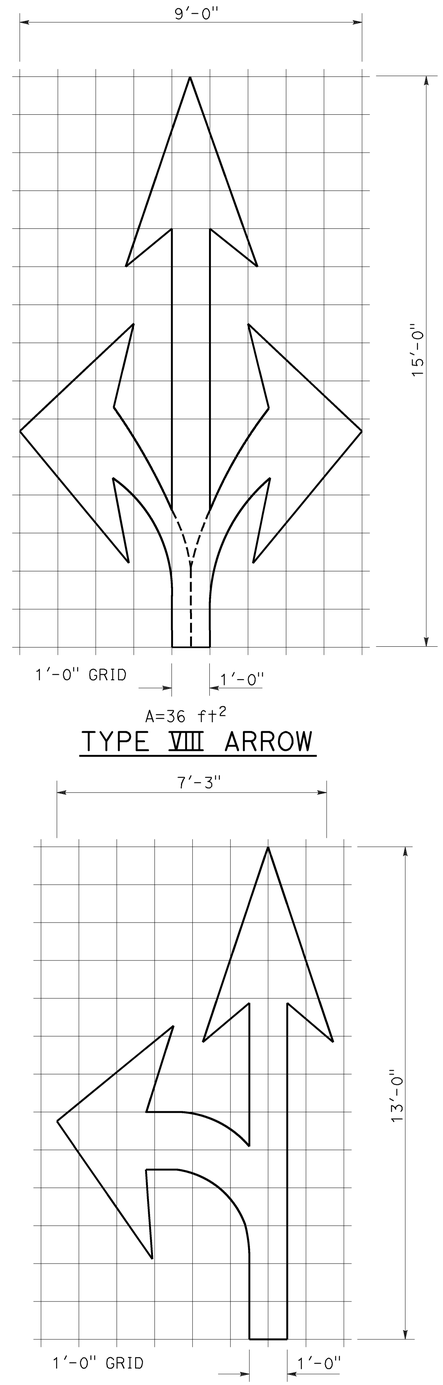

A=36 ft^2

TYPE VIII ARROW

A=27 ft^2

TYPE VII (L) ARROW

(For Type VII (R) arrow, use mirror image)

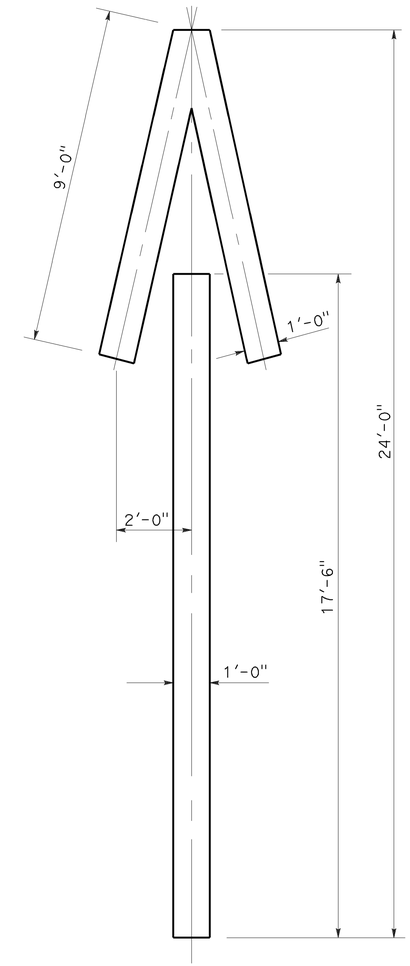

A=33 ft^2

TYPE V ARROW

NOTE:
Minor variations in dimensions may be accepted by the Engineer.

STATE OF CALIFORNIA
DEPARTMENT OF TRANSPORTATION

PAVEMENT MARKINGS ARROWS

NO SCALE

RSP A24A DATED APRIL 20, 2012 SUPERSEDES STANDARD PLAN A24A DATED MAY 20, 2011 - PAGE 13 OF THE STANDARD PLANS BOOK DATED 2010.

REVISED STANDARD PLAN RSP A24A

3-14-12

Dist	COUNTY	ROUTE	POST MILES TOTAL PROJECT	SHEET No.	TOTAL SHEETS
10	SJ	99	0.0/5.7	66	116

REGISTERED CIVIL ENGINEER

July 20, 2012
PLANS APPROVAL DATE

REGISTERED PROFESSIONAL ENGINEER
Roberta L. McLaughlin
No. C40375
Exp. 3-31-13
CIVIL
STATE OF CALIFORNIA

THE STATE OF CALIFORNIA OR ITS OFFICERS OR AGENTS SHALL NOT BE RESPONSIBLE FOR THE ACCURACY OR COMPLETENESS OF SCANNED COPIES OF THIS PLAN SHEET.

TO ACCOMPANY PLANS DATED 5-2-16

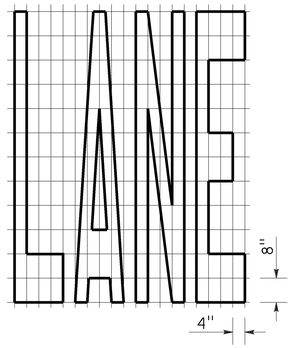

A=24 ft²

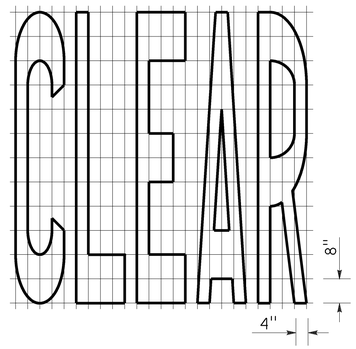

A=27 ft²

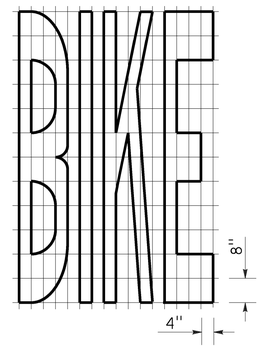

A=21 ft²

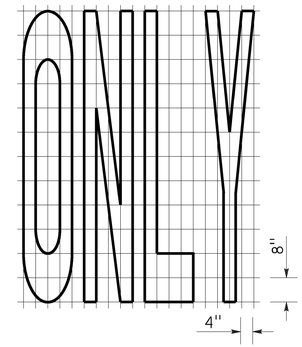

A=22 ft²

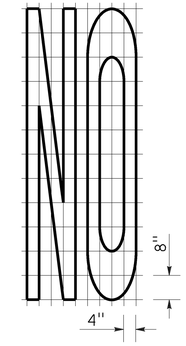

A=14 ft²

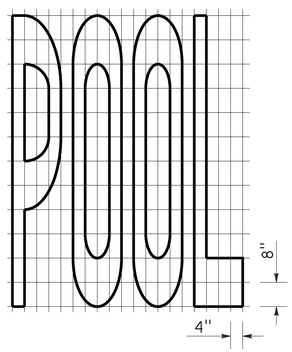

A=23 ft²

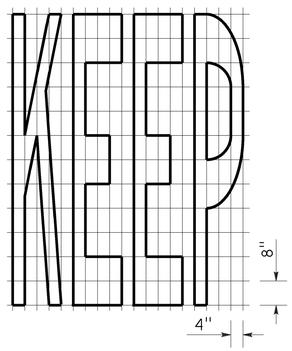

A=24 ft²

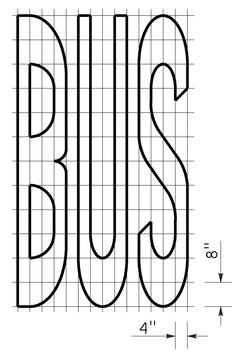

A=20 ft²

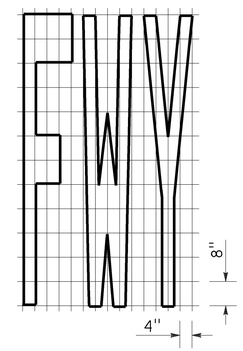

A=16 ft²

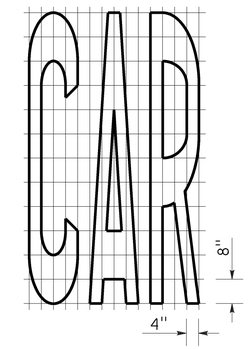

A=17 ft²

WORD MARKINGS			
ITEM	ft²	ITEM	ft²
LANE	24	NO	14
POOL	23	BIKE	21
CAR	17	BUS	20
CLEAR	27	ONLY	22
KEEP	24	FWY	16

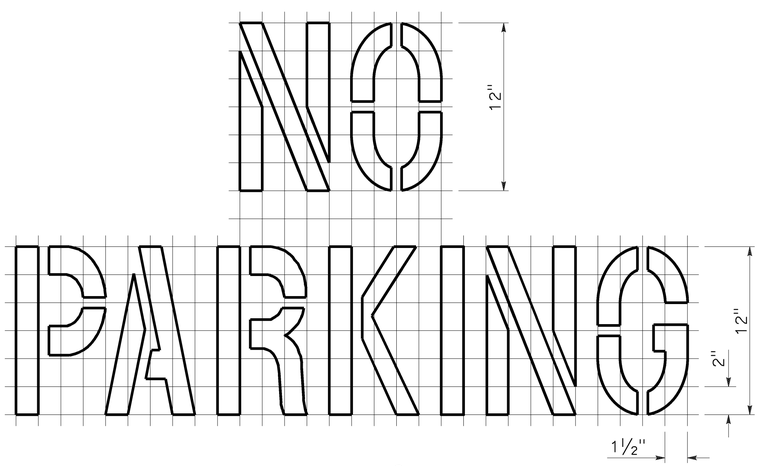

A=2 ft²
See Notes 6 and 7

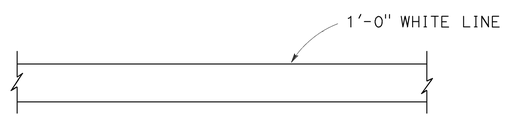

LIMIT LINE (STOP LINE)

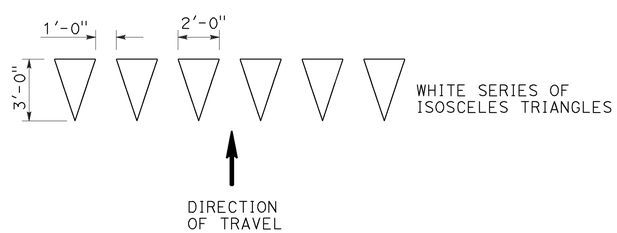

YIELD LINE

NOTES:

1. If a message consists of more than one word, it should read "UP", i.e., the first word should be nearest the driver.
2. The space between words should be at least four times the height of the characters for low speed roads, but not more than ten times the height of the characters. The space may be reduced appropriately where there is limited space because of local conditions.
3. Minor variations in dimensions may be accepted by the Engineer.
4. Portions of a letter, number or symbol may be separated by connecting segments not to exceed 2" in width.
5. The words "NO PARKING" pavement marking is to be used for parking facilities. For typical locations of markings, see Standard Plans A90A and A90B.
6. The words "NO PARKING", shall be painted in white letters no less than 1'-0" high on a contrasting background and located so that it is visible to traffic enforcement officials.

STATE OF CALIFORNIA
DEPARTMENT OF TRANSPORTATION

PAVEMENT MARKINGS WORDS, LIMIT AND YIELD LINES

NO SCALE

RSP A24E DATED JULY 20, 2012 SUPERSEDES STANDARD PLAN A24E
DATED MAY 20, 2011 - PAGE 17 OF THE STANDARD PLANS BOOK DATED 2010.

REVISED STANDARD PLAN RSP A24E

2010 REVISED STANDARD PLAN RSP A24E

6-12-12

Dist	COUNTY	ROUTE	POST MILES TOTAL PROJECT	SHEET No.	TOTAL SHEETS
10	SJ	99	0.0/5.7	67	116

REGISTERED CIVIL ENGINEER

July 20, 2012
PLANS APPROVAL DATE

REGISTERED PROFESSIONAL ENGINEER
Roberta L. McLaughlin
No. C40375
Exp. 3-31-13
CIVIL
STATE OF CALIFORNIA

THE STATE OF CALIFORNIA OR ITS OFFICERS OR AGENTS SHALL NOT BE RESPONSIBLE FOR THE ACCURACY OR COMPLETENESS OF SCANNED COPIES OF THIS PLAN SHEET.

TO ACCOMPANY PLANS DATED 5-2-16

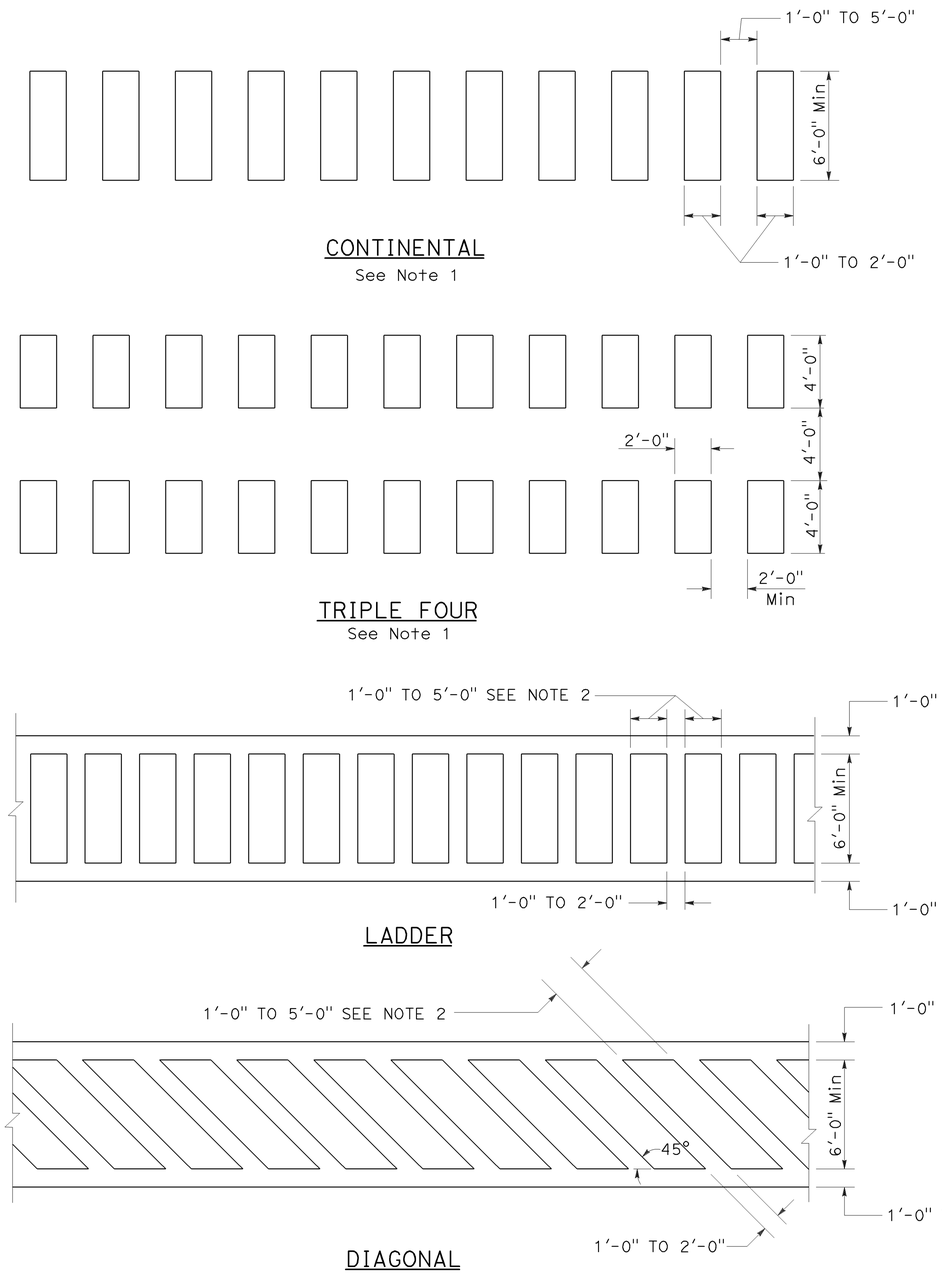

HIGHER VISIBILITY CROSSWALKS

NOTES:

1. Spaces between markings should be placed in wheel tracks of each lane.
2. Spacings not to exceed 2.5 times width of longitudinal line.
3. All crosswalk markings must be white except for those near schools must be yellow.

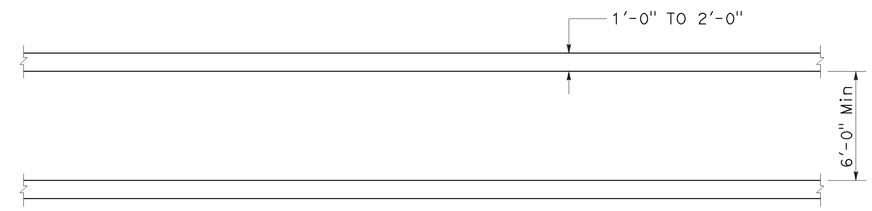

BASIC

STATE OF CALIFORNIA
DEPARTMENT OF TRANSPORTATION

PAVEMENT MARKINGS CROSSWALKS

NO SCALE

RSP A24F DATED JULY 20, 2012 SUPPLEMENTS THE STANDARD PLANS BOOK DATED 2010.

REVISED STANDARD PLAN RSP A24F

2010 REVISED STANDARD PLAN RSP A24F

6-28-12

Dist	COUNTY	ROUTE	POST MILES TOTAL PROJECT	SHEET No.	TOTAL SHEETS
10	SJ	99	0.0/5.7	68	116

Atifa Ferouz
REGISTERED CIVIL ENGINEER

July 15, 2016
PLANS APPROVAL DATE

REGISTERED PROFESSIONAL ENGINEER
Atifa Ferouz
No. C80402
Exp. 3-31-17
CIVIL
STATE OF CALIFORNIA

THE STATE OF CALIFORNIA OR ITS OFFICERS OR AGENTS SHALL NOT BE RESPONSIBLE FOR THE ACCURACY OR COMPLETENESS OF SCANNED COPIES OF THIS PLAN SHEET.

TO ACCOMPANY PLANS DATED 5-2-16

2015 REVISED STANDARD PLAN RSP A40C

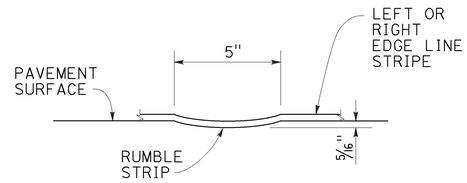

SECTION C-C

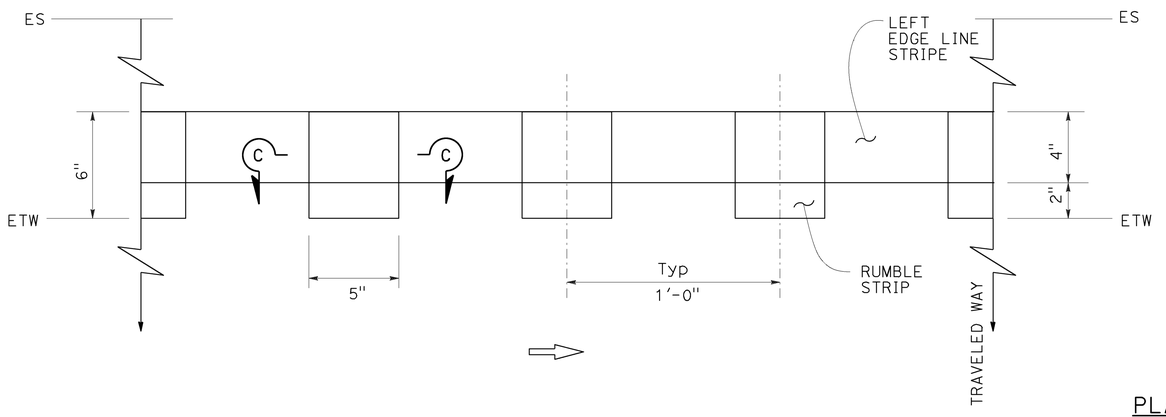

PLAN

EDGE LINE RUMBLE STRIP PLACEMENT
LEFT OF DIRECTION OF TRAVEL

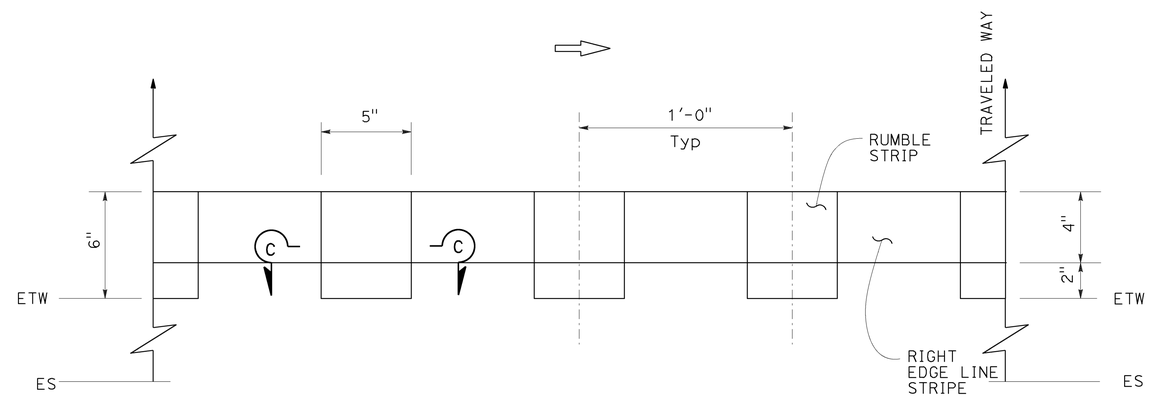

EDGE LINE RUMBLE STRIP PLACEMENT
RIGHT OF DIRECTION OF TRAVEL

TYPICAL EDGE LINE RUMBLE STRIP PLACEMENT

STATE OF CALIFORNIA
DEPARTMENT OF TRANSPORTATION

EDGE LINE RUMBLE STRIP DETAILS GROUND-IN INDENTATIONS

NO SCALE

RSP A40C DATED JULY 15, 2016 SUPPLEMENTS THE STANDARD PLANS BOOK DATED 2015.

REVISED STANDARD PLAN RSP A40C

5-25-16

Dist	COUNTY	ROUTE	POST MILES TOTAL PROJECT	SHEET No.	TOTAL SHEETS
10	SJ	99	0.0/5.7	69	116

Atifa Ferouz
REGISTERED CIVIL ENGINEER

July 15, 2016
PLANS APPROVAL DATE

REGISTERED PROFESSIONAL ENGINEER
Atifa Ferouz
No. C80402
Exp. 3-31-17
CIVIL
STATE OF CALIFORNIA

THE STATE OF CALIFORNIA OR ITS OFFICERS OR AGENTS SHALL NOT BE RESPONSIBLE FOR THE ACCURACY OR COMPLETENESS OF SCANNED COPIES OF THIS PLAN SHEET.

TO ACCOMPANY PLANS DATED 5-2-16

NOTE:

Detail 21 and Detail 5 traffic stripes shown, see project plans for traffic stripe details.

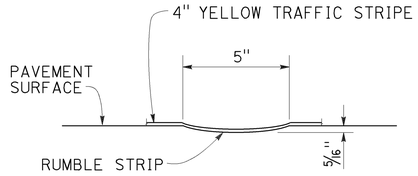

SECTION A-A

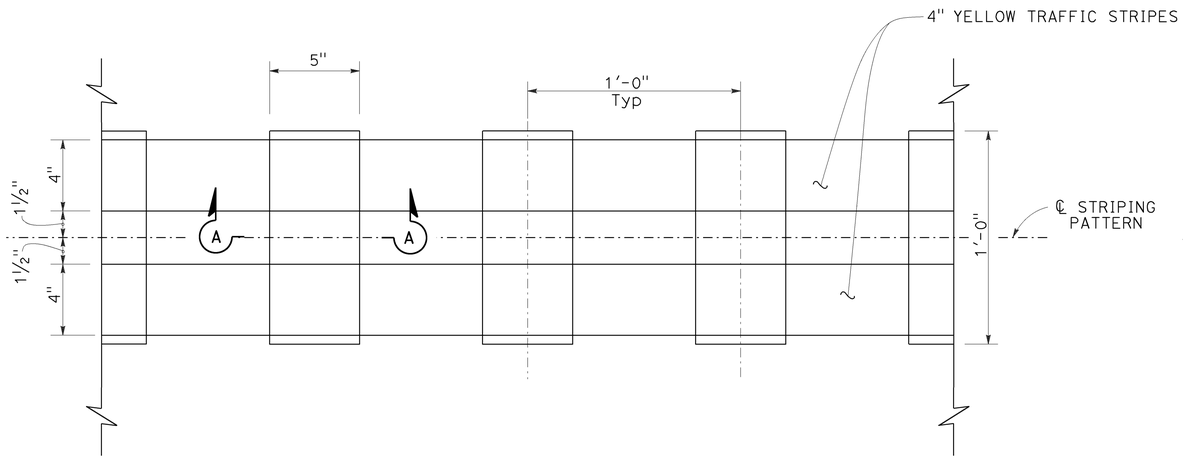

PLAN

RUMBLE STRIP PLACEMENT IN NO PASSING ZONE

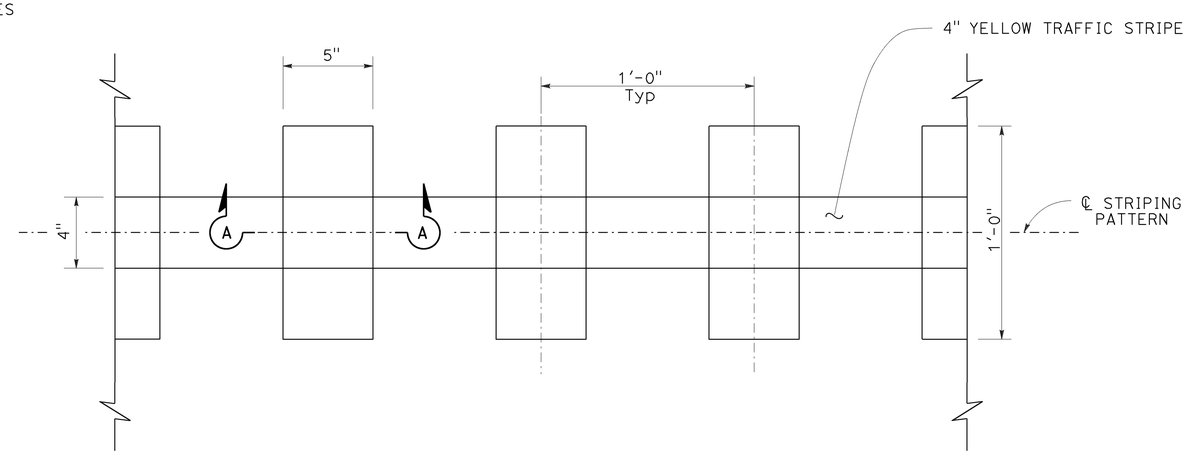

RUMBLE STRIP PLACEMENT IN PASSING ZONE

STATE OF CALIFORNIA
DEPARTMENT OF TRANSPORTATION

CENTERLINE RUMBLE STRIP DETAILS GROUND-IN INDENTATIONS

NO SCALE

TYPICAL CENTERLINE RUMBLE STRIP PLACEMENT

RSP A40D DATED JULY 15, 2016 SUPPLEMENTS THE STANDARD PLANS BOOK DATED 2015.

REVISED STANDARD PLAN RSP A40D

2015 REVISED STANDARD PLAN RSP A40D

5-23-16

Dist	COUNTY	ROUTE	POST MILES TOTAL PROJECT	SHEET No.	TOTAL SHEETS
10	SJ	99	0.0/5.7	70	116

Atifa Ferouz
REGISTERED CIVIL ENGINEER

July 15, 2016
PLANS APPROVAL DATE

REGISTERED PROFESSIONAL ENGINEER
Atifa Ferouz
No. C80402
Exp. 3-31-17
CIVIL
STATE OF CALIFORNIA

THE STATE OF CALIFORNIA OR ITS OFFICERS OR AGENTS SHALL NOT BE RESPONSIBLE FOR THE ACCURACY OR COMPLETENESS OF SCANNED COPIES OF THIS PLAN SHEET.

TO ACCOMPANY PLANS DATED 5-2-16

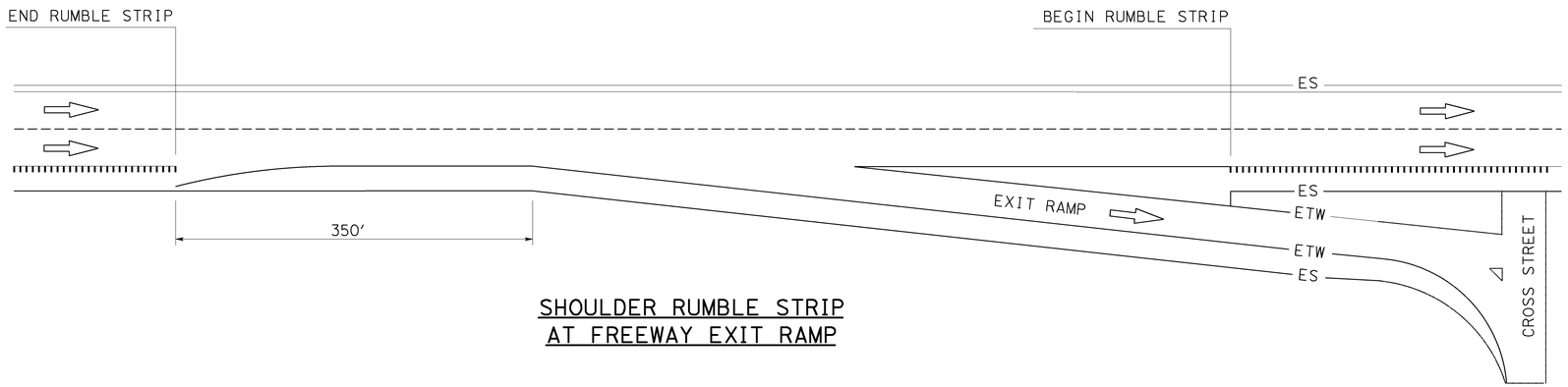

SHOULDER RUMBLE STRIP
AT FREEWAY EXIT RAMP

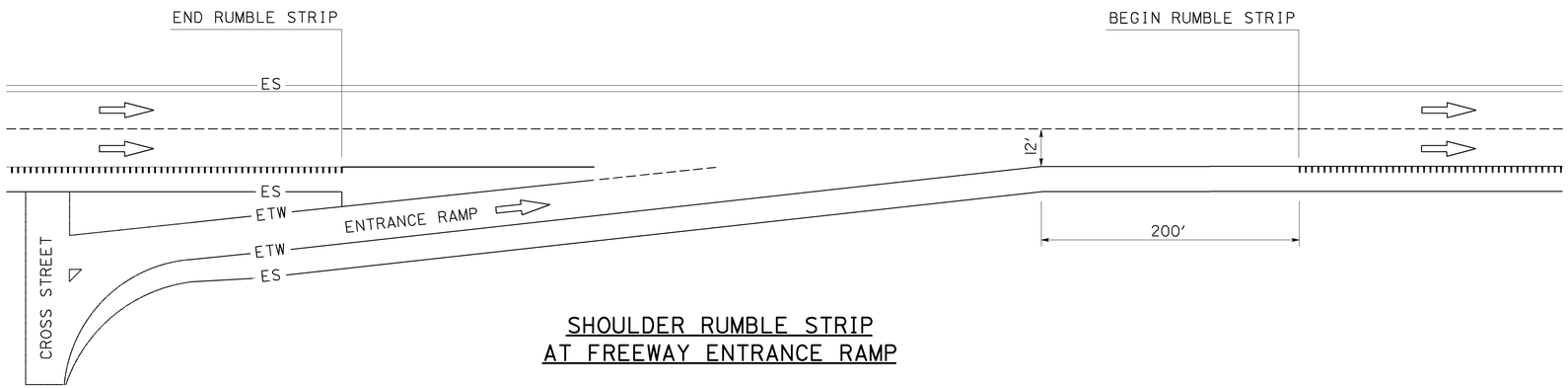

SHOULDER RUMBLE STRIP
AT FREEWAY ENTRANCE RAMP

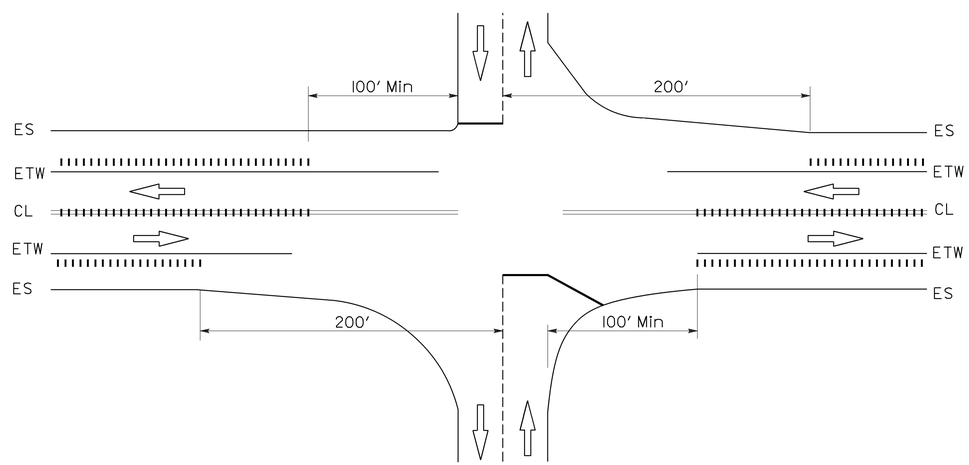

CENTERLINE AND SHOULDER RUMBLE STRIP
AT GRADE INTERSECTION

LEGEND

RUMBLE STRIP (GROUND-IN)

STATE OF CALIFORNIA
DEPARTMENT OF TRANSPORTATION

RUMBLE STRIP PLACEMENT AT FREEWAY EXIT RAMPS, FREEWAY ENTRANCE RAMPS, AND INTERSECTIONS

NO SCALE

RSP A40E DATED JULY 15, 2016 SUPPLEMENTS THE STANDARD PLANS BOOK DATED 2015.

REVISED STANDARD PLAN RSP A40E

2015 REVISED STANDARD PLAN RSP A40E

5-23-16

Dist	COUNTY	ROUTE	POST MILES TOTAL PROJECT	SHEET No.	TOTAL SHEETS
10	SJ	99	0.0/5.7	71	116

Atifa Ferouz
REGISTERED CIVIL ENGINEER

July 15, 2016
PLANS APPROVAL DATE

REGISTERED PROFESSIONAL ENGINEER
Atifa Ferouz
No. C80402
Exp. 3-31-17
CIVIL
STATE OF CALIFORNIA

THE STATE OF CALIFORNIA OR ITS OFFICERS OR AGENTS SHALL NOT BE RESPONSIBLE FOR THE ACCURACY OR COMPLETENESS OF SCANNED COPIES OF THIS PLAN SHEET.

TO ACCOMPANY PLANS DATED 5-2-16

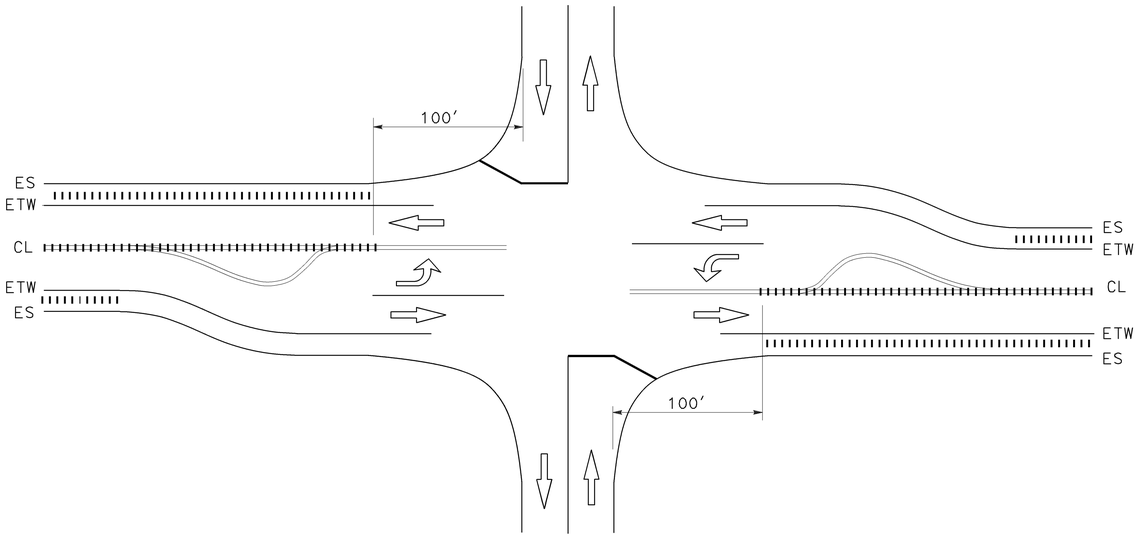

CENTERLINE AND SHOULDER RUMBLE STRIPS
AT INTERSECTION WITH LEFT TURN POCKETS

LEGEND

RUMBLE STRIPS (GROUND-IN)

RAILROAD TRACKS

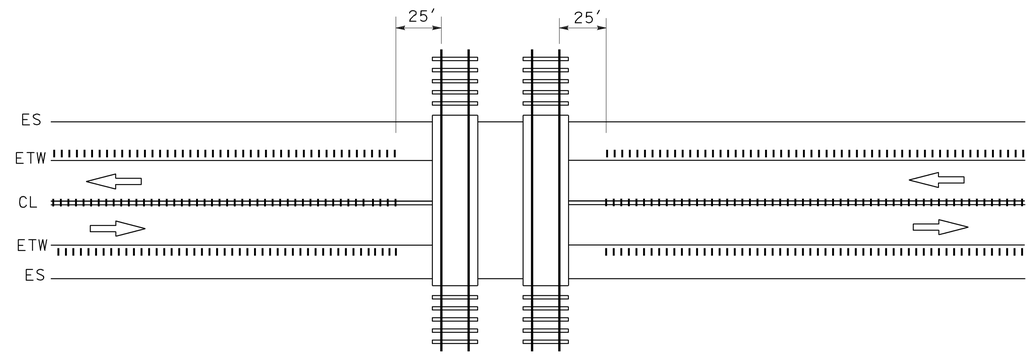

CENTERLINE AND SHOULDER RUMBLE STRIPS
AT RAILROAD CROSSING

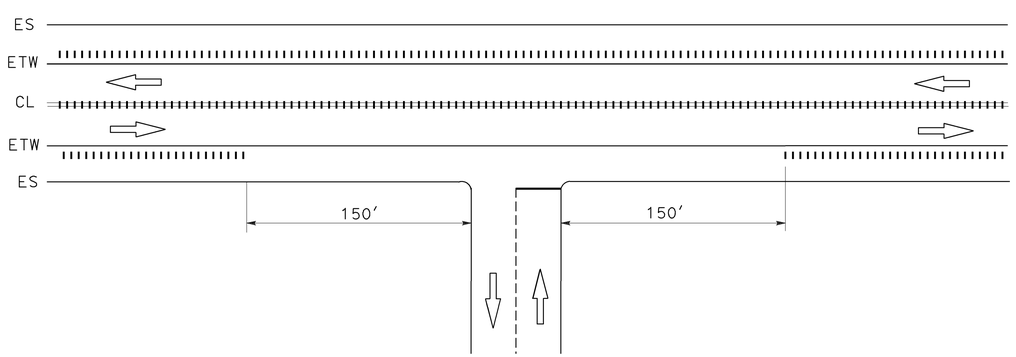

CENTERLINE AND SHOULDER RUMBLE STRIPS
AT DRIVEWAY/PRIVATE ROAD APPROACH

STATE OF CALIFORNIA
DEPARTMENT OF TRANSPORTATION

RUMBLE STRIP PLACEMENT AT INTERSECTIONS WITH LEFT TURN POCKETS, RAILROAD CROSSINGS, PRIVATE ROADS, AND MAJOR DRIVEWAYS

NO SCALE

RSP A40F DATED JULY 15, 2016 SUPPLEMENTS THE STANDARD PLANS BOOK DATED 2015.

REVISED STANDARD PLAN RSP A40F

2015 REVISED STANDARD PLAN RSP A40F

5-23-16

Dist	COUNTY	ROUTE	POST MILES TOTAL PROJECT	SHEET No.	TOTAL SHEETS
10	SJ	99	0.0/5.7	72	116

REGISTERED CIVIL ENGINEER

July 18, 2014
PLANS APPROVAL DATE

REGISTERED PROFESSIONAL ENGINEER
Carl M. Duan
No. C59976
Exp. 6-30-16
CIVIL
STATE OF CALIFORNIA

THE STATE OF CALIFORNIA OR ITS OFFICERS OR AGENTS SHALL NOT BE RESPONSIBLE FOR THE ACCURACY OR COMPLETENESS OF SCANNED COPIES OF THIS PLAN SHEET.

TO ACCOMPANY PLANS DATED 5-2-16

DESIGN NOTES:

Design: AASHTO LRFD Bridge Design Specifications, 4th edition with California Amendments. ACPA DESIGN DATA 1, October 2007. INDIRECT DESIGN METHOD

Soil: w Fe = 162 pcf Installation Type 1
w Fe = 168 pcf Installation Types 2 & 3
w = Unit weight of soil (pcf)
Fe = Soil-structure interaction factor

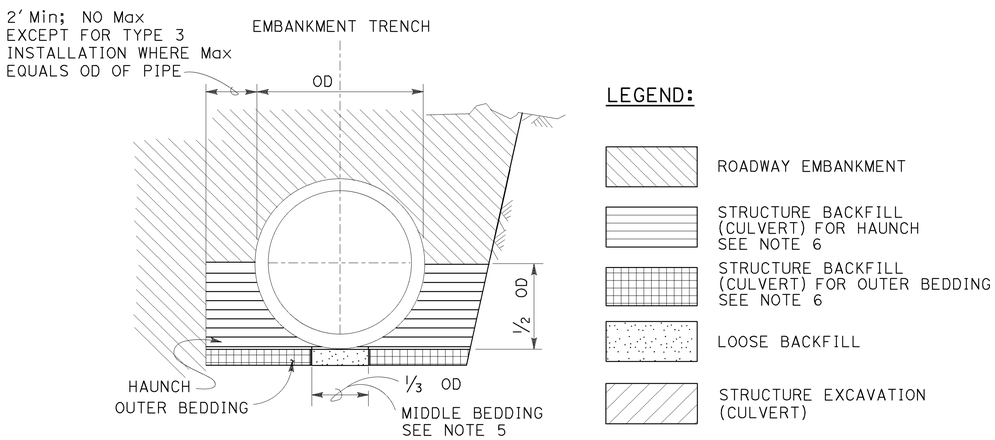

BACKFILL

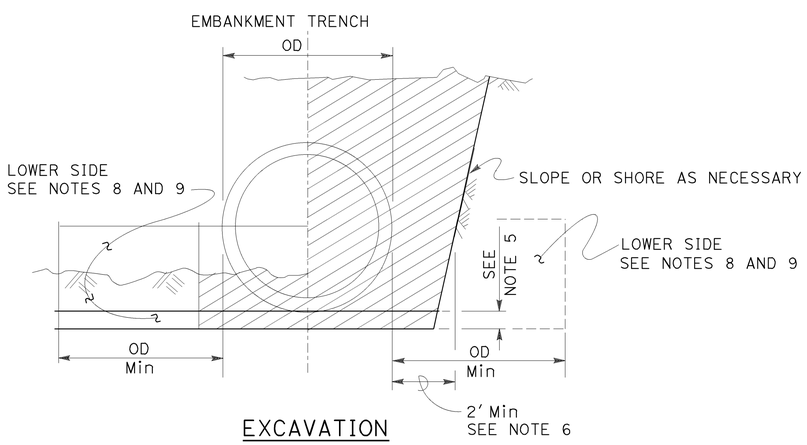

EXCAVATION

INSTALLATION TYPE 1:

The haunch and outer bedding shall be compacted to a minimum 90 percent relative compaction. In addition, the minimum sand equivalent in these areas shall be 30 and the maximum percentage passing the No. 200 sieve size shall be 12.

INSTALLATION TYPE 2:

The haunch and outer bedding shall be compacted to a minimum 90 percent relative compaction. In addition, the minimum sand equivalent in these areas shall be 25.

INSTALLATION TYPE 3:

The haunch and outer bedding shall be compacted to a minimum 85 percent relative compaction. 90 percent relative compaction will be required where the fill over the pipe is less than 4′-0″ or 1/2 OD. In addition, the minimum sand equivalent in these areas shall be 25 and the material shall not contain rocks, broken concrete, or other solid material exceeding 3″ in greatest dimension.

INSTALLATION TYPE 1

MINIMUM CLASS AND D-LOAD	COVER	
	60″ Dia AND SMALLER	OVER 60″ Dia TO 120″ Dia Max
CLASS II 1000D	14.9′	12.9′
CLASS III 1350D	15.0′ - 21.9′	13.0′ - 18.9′
CLASS III SPECIAL 1700D	22.0′ - 27.9′	19.0′ - 24.9′
CLASS IV 2000D	28.0′ - 32.9′	25.0′ - 29.9′
CLASS IV SPECIAL 2500D	33.0′ - 41.9′	30.0′ - 38.9′
CLASS V 3000D	42.0′ - 49.9′	39.0′ - 46.9′
CLASS V SPECIAL 3600D	50.0′ - 60.0′	47.0′ - 58.0′

INSTALLATION TYPE 2

MINIMUM CLASS AND D-LOAD	COVER	
	60″ Dia AND SMALLER	OVER 60″ Dia TO 120″ Dia Max
CLASS II 1000D	11.9′	9.9′
CLASS III 1350D	12.0′ - 15.9′	10.0′ - 14.9′
CLASS III SPECIAL 1700D	16.0′ - 20.9′	15.0′ - 19.9′
CLASS IV 2000D	21.0′ - 24.9′	20.0′ - 23.9′
CLASS IV SPECIAL 2500D	25.0′ - 31.9′	24.0′ - 30.9′
CLASS V 3000D	32.0′ - 37.9′	31.0′ - 37.9′
CLASS V SPECIAL 3600D	38.0′ - 46.0′	38.0′ - 46.0′

INSTALLATION TYPE 3

MINIMUM CLASS AND D-LOAD	COVER	
	60″ Dia AND SMALLER	OVER 60″ Dia TO 120″ Dia Max
CLASS II 1000D	8.9′	5.9′
CLASS III 1350D	9.0′ - 11.9′	6.0′ - 10.9′
CLASS III SPECIAL 1700D	12.0′ - 15.9′	11.0′ - 13.9′
CLASS IV 2000D	16.0′ - 18.9′	14.0′ - 17.9′
CLASS IV SPECIAL 2500D	19.0′ - 24.9′	18.0′ - 22.9′
CLASS V 3000D	25.0′ - 29.9′	23.0′ - 28.9′
CLASS V SPECIAL 3600D	30.0′ - 36.0′	29.0′ - 35.0′

NOTES:

1. Unless otherwise shown on the plans or specified in the special provision, the Contractor shall have the option of selecting the class of RCP and the type of installation to be used, provided the height of cover does not exceed the value shown for the RCP selected.
   Example: 24″ RCP culvert with maximum cover of 24′-0″ the options are:
   a) Class III Special or stronger with Installation Type 1.
   b) Class IV or stronger with Installation Type 2.
   c) Class IV Special or stronger with Installation Type 3.
   Cover is defined as the maximum vertical distance from top of the pipe to finished grade within the length of any given culvert.
2. The class of RCP and Installation Type selected shall be the same throughout the length of any given culvert.
3. The "length of any culvert" is defined as the culvert between:
   a) Successive drainage structure (inlets, junction boxes, headwalls, etc.).
   b) A drainage structure and the inlet or outlet end of the culvert.
   c) The inlet and outlet end of the culvert when there are no intervening drainage structures.
4. Oval and arch shaped RCP shall not be used.
5. Bedding depth: 1/25 OD Min, not less than 3″.
6. Slurry cement backfill may be substituted for backfill in the outer bedding and haunch areas. If slurry is used, the outer and middle beddings shall be omitted. Prior to installation, the soil under the middle 1/3 of the outside diameter of the pipe shall be softened by scarifying or other means to a minimum depth of 1/25 OD, but not less than 3″. Where slurry cement backfill is used, clear distance to trench wall may be reduced as set forth in the Standard Specifications.
7. Backfill shall be placed full width of excavation except where dimensions are shown for backfill width or thickness. Dimensions shown are minimum.
8. Lower side shall be suitable material as determined by the Engineer. Otherwise it shall be considered unsuitable as set forth in of the Standard Specifications. See Note 9.
9. Where the pipe is placed in a trench, if the trench walls are sloped at 5 vertical to 1 horizontal or steeper for at least 90 percent of the trench height or up to not less than 12″ from the grading plane, the firmness of the soil in the lower side need not be considered.
10. Non-reinforced precast concrete pipe sizes 3′-0″ or smaller may be placed under installation Types 1, 2 or 3.

STATE OF CALIFORNIA
DEPARTMENT OF TRANSPORTATION

EXCAVATION AND BACKFILL CONCRETE PIPE CULVERTS INDIRECT DESIGN METHOD

NO SCALE

RSP A62DA DATED JULY 18, 2014 SUPERSEDES STANDARD PLAN A62DA DATED MAY 20, 2011 - PAGE 24 OF THE STANDARD PLANS BOOK DATED 2010.

REVISED STANDARD PLAN RSP A62DA

2010 REVISED STANDARD PLAN RSP A62DA

5-13-14

Dist	COUNTY	ROUTE	POST MILES TOTAL PROJECT	SHEET No.	TOTAL SHEETS
10	SJ	99	0.0/5.7	73	116

REGISTERED CIVIL ENGINEER

October 30, 2015
PLANS APPROVAL DATE

REGISTERED PROFESSIONAL ENGINEER Carl M. Duan No. C59976 Exp. 6-30-16 CIVIL STATE OF CALIFORNIA

THE STATE OF CALIFORNIA OR ITS OFFICERS OR AGENTS SHALL NOT BE RESPONSIBLE FOR THE ACCURACY OR COMPLETENESS OF SCANNED COPIES OF THIS PLAN SHEET.

TO ACCOMPANY PLANS DATED 5-2-16

2010 REVISED STANDARD PLAN RSP A62F

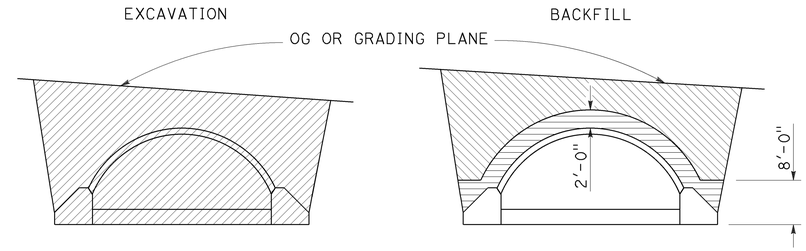

IN TRENCH

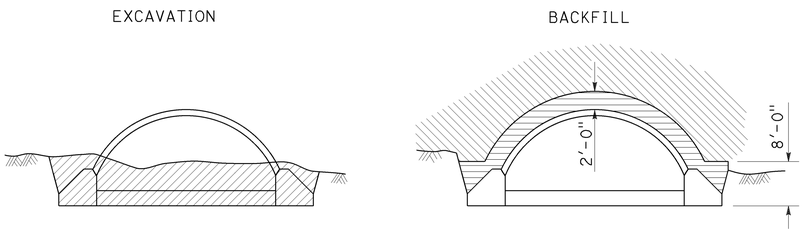

IN EMBANKMENT

STRUCTURAL STEEL PLATE ARCHES

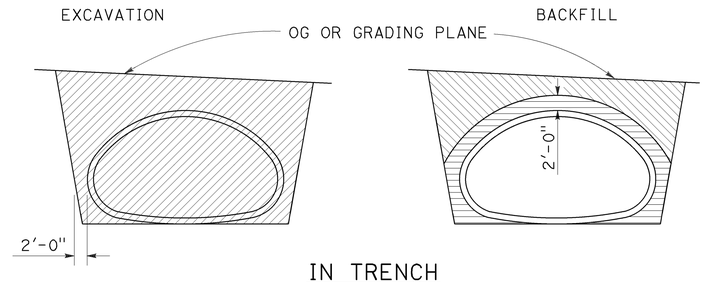

IN TRENCH

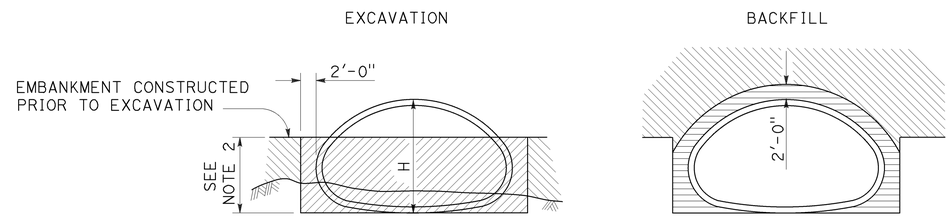

IN EMBANKMENT

STRUCTURAL STEEL PLATE PIPE ARCHES AND VEHICULAR UNDERCROSSING

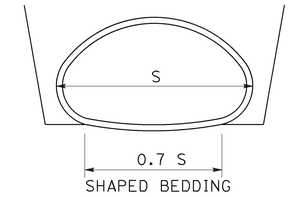

SHAPED BEDDING

S = Larger than 84"

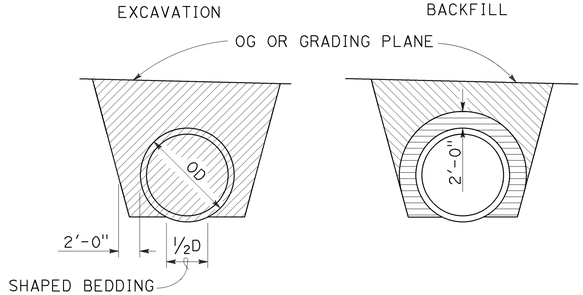

IN TRENCH

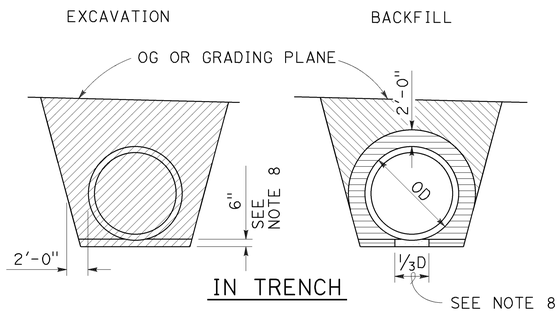

IN TRENCH

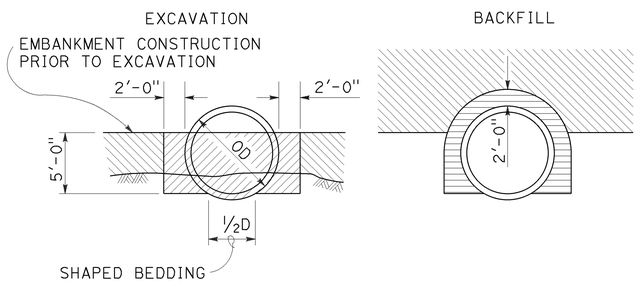

IN EMBANKMENT

PIPES

Larger than 84"

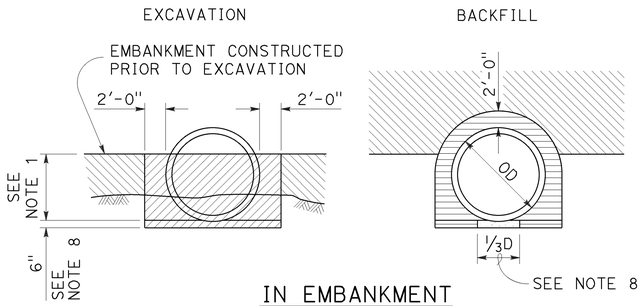

IN EMBANKMENT

METAL AND PLASTIC PIPES AND CORRUGATED METAL PIPE ARCHES

84" or Smaller

NOTES:

1. PIPES: 30" minimum for diameters up to and including 42" then ⅔ diameter but no more than 60" required. CORRUGATED METAL PIPE ARCHES: 30" maximum.
2. ⅔ H up to 60" maximum.
3. Slope or shore excavation sides as necessary.
4. Backfill shall be placed full width of excavation except as noted.
5. Diagrams do not apply to overside drains.
6. Dimensions shown are minimum.
7. Construction strutting of structural steel plate pipe, arches and vehicular undercrossing to be used when shown on the project plans. When shown, see Standard Plan D88A for strutting requirements.
8. Excavation below pipe and 80% relative compaction requirements for plastic pipes only.
9. D is the inside diameter (ID) of the pipe.

LEGEND

- STRUCTURE EXCAVATION (CULVERT)
- ROADWAY EMBANKMENT
- STRUCTURE BACKFILL (CULVERT) 95% RELATIVE COMPACTION
- STRUCTURE BACKFILL (CULVERT) 80% RELATIVE COMPACTION

STATE OF CALIFORNIA
DEPARTMENT OF TRANSPORTATION

EXCAVATION AND BACKFILL METAL AND PLASTIC CULVERTS

NO SCALE

RSP A62F DATED OCTOBER 30, 2015 SUPERSEDES STANDARD PLAN A62F DATED MAY 20, 2011 - PAGE 26 OF THE STANDARD PLANS BOOK DATED 2010.

REVISED STANDARD PLAN RSP A62F

10-13-15

Dist	COUNTY	ROUTE	POST MILES TOTAL PROJECT	SHEET No.	TOTAL SHEETS
10	SJ	99	0.0/5.7	74	116

Randell D. Hiatt
REGISTERED CIVIL ENGINEER

July 19, 2013
PLANS APPROVAL DATE

REGISTERED PROFESSIONAL ENGINEER
Randell D. Hiatt
No. C50200
Exp. 6-30-15
CIVIL
STATE OF CALIFORNIA

THE STATE OF CALIFORNIA OR ITS OFFICERS OR AGENTS SHALL NOT BE RESPONSIBLE FOR THE ACCURACY OR COMPLETENESS OF SCANNED COPIES OF THIS PLAN SHEET.

TO ACCOMPANY PLANS DATED 5-2-16

2010 REVISED STANDARD PLAN RSP A77L1

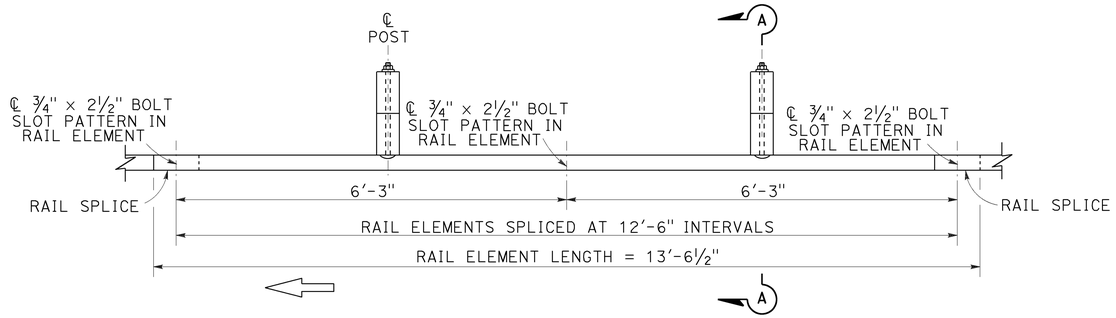

PLAN

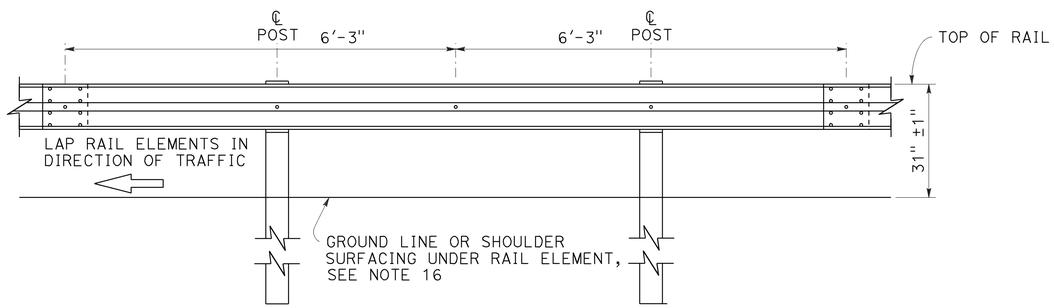

ELEVATION

MIDWEST GUARDRAIL SYSTEM WITH WOOD POST AND BLOCKS

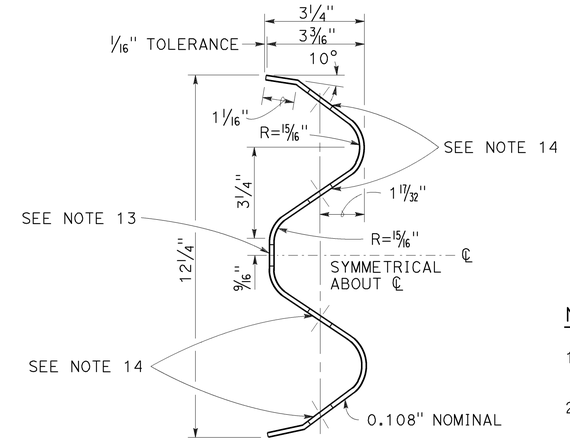

SECTION THRU RAIL ELEMENT

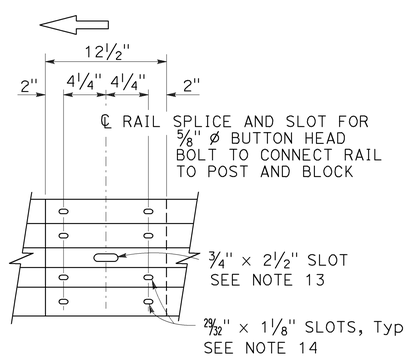

ELEVATION

RAIL ELEMENT SPLICE DETAIL

a) Connect the over lapped end of the rail elements with 5/8" Ø × 1 3/8" button head oval shoulder splice bolts inserted into the 29/32" × 1 1/8" slots and bolted together with 5/8" Ø recessed hex nuts. Recess of hex nut points toward rail element. A total of 8 bolts and nuts are to be used at each rail splice connection.

b) The ends of the rail elements are to be overlapped in the direction of traffic (see details).

c) Where end cap is to be attached to the end of a rail element, a total of 4 of the above described splice bolts and nuts are to be used.

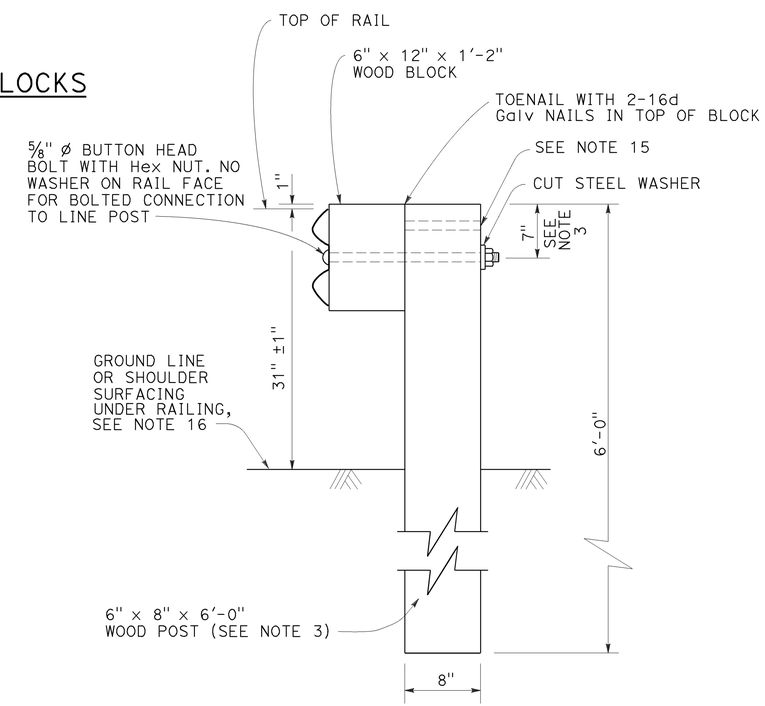

SECTION A-A

TYPICAL WOOD LINE POST INSTALLATION

See Note 4

NOTES:

1. For details of steel post installations, see Revised Standard Plan RSP A77L2.
2. For details of standard hardware used to construct MGS, see Revised Standard Plan RSP A77M1.
3. For details of wood posts and wood blocks used to construct MGS, see Revised Standard Plan RSP A77N1.
4. For additional installation details, see Revised Standard Plan RSP A77N3.
5. MGS post spacing to be 6'-3" center to center, except as otherwise noted.
6. For MGS typical layouts, see the A77P, A77Q and A77R Series of Standard Plans.
7. If railing is connected to terminal system end treatment, use 31" height terminal system end treatment.
8. For MGS end anchor details, see Revised Standard Plans RSP A77S1 and RSP A77T2.
9. For details of MGS transition to bridge railing, see Revised Standard Plan RSP A77U4.
10. For additional details of MSG connection to bridge railing, see Revised Standard Plans RSP A77U1, RSP A77U2 and RSP A77V1.
11. For MGS connection details to abutments and walls, see Revised Standard Plan RSP A77U3.
12. For typical MGS delineation and dike positioning details, see Revised Standard Plan RSP A77N4.
13. Slotted hole for bolted connection of rail element to block and post. See "Section Thru Rail Element".
14. Slotted holes for splice bolts to overlap ends of rail element. See "Section Thru Rail Element".
15. Additional hole in uppermost portion of line post is for potential future adjustments of railing height. See Revised Standard Plan RSP A77N1.
16. Install posts in soil.

STATE OF CALIFORNIA
DEPARTMENT OF TRANSPORTATION

MIDWEST GUARDRAIL SYSTEM STANDARD RAILING SECTION (WOOD POST WITH WOOD BLOCK)

NO SCALE

RSP A77L1 DATED JULY 19, 2013 SUPPLEMENTS STANDARD PLANS BOOK DATED 2010.

REVISED STANDARD PLAN RSP A77L1

Dist	COUNTY	ROUTE	POST MILES TOTAL PROJECT	SHEET No.	TOTAL SHEETS
10	SJ	99	0.0/5.7	75	116

Randell D. Hiatt
REGISTERED CIVIL ENGINEER

July 19, 2013
PLANS APPROVAL DATE

REGISTERED PROFESSIONAL ENGINEER
Randell D. Hiatt
No. C50200
Exp. 6-30-15
CIVIL
STATE OF CALIFORNIA

THE STATE OF CALIFORNIA OR ITS OFFICERS OR AGENTS SHALL NOT BE RESPONSIBLE FOR THE ACCURACY OR COMPLETENESS OF SCANNED COPIES OF THIS PLAN SHEET.

TO ACCOMPANY PLANS DATED 5-2-16

2010 REVISED STANDARD PLAN RSP A77L2

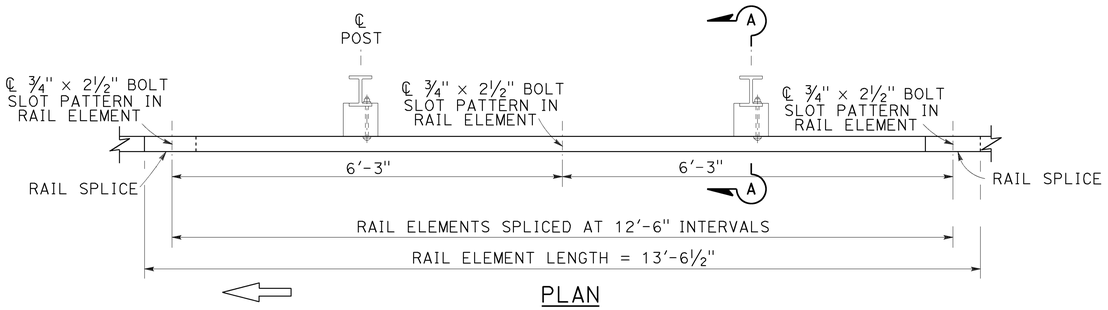

PLAN

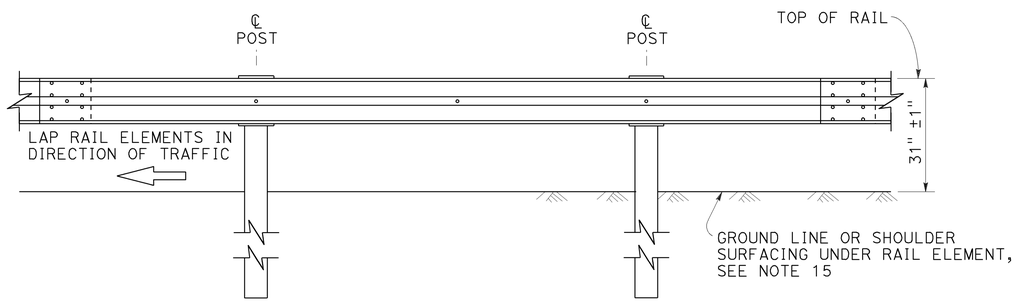

ELEVATION

MIDWEST GUARDRAIL SYSTEM WITH STEEL POSTS AND NOTCHED WOOD OR NOTCHED RECYCLED PLASTIC BLOCKS

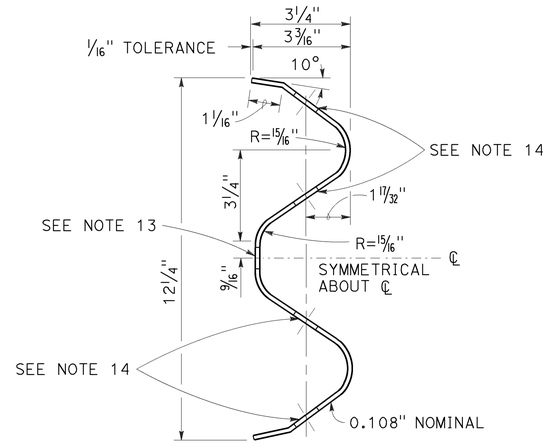

SECTION THRU RAIL ELEMENT

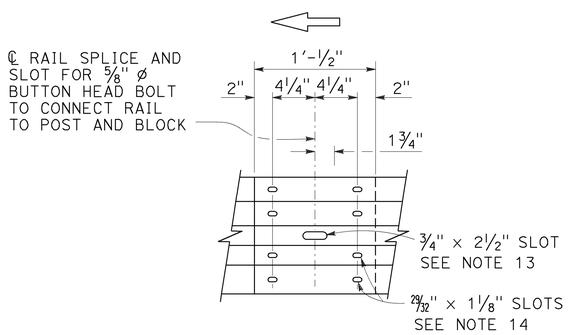

ELEVATION

RAIL ELEMENT SPLICE DETAIL

a) Connect the over lapped end of the rail elements with ⅝" ø × 1⅜" button head oval shoulder splice bolts inserted into the 29⁄32" × 1⅛" slots and bolted together with ⅝" ø recessed hex nuts. Recess of hex nut points toward rail element. A total of 8 bolts and nuts are to be used at each rail splice connection.

b) The ends of the rail elements are to be overlapped in the direction of traffic (see details).

c) Where end cap is to be attached to the end of a rail element, a total of 4 of the above described splice bolts and nuts are to be used.

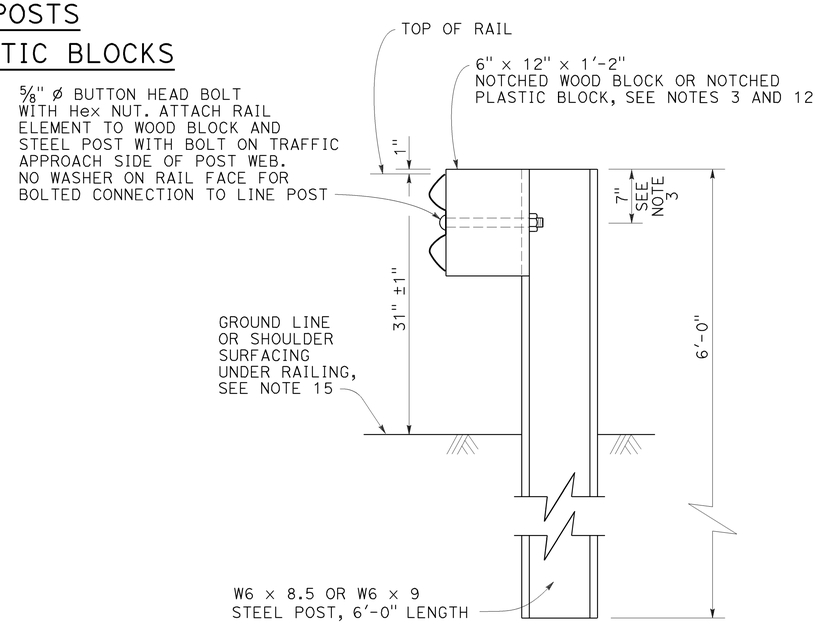

SECTION A-A

TYPICAL STEEL LINE POST INSTALLATION

See Note 4

NOTES:

1. For details of wood post installations, see Revised Standard Plan RSP A77L1.
2. For details of standard hardware used to construct MGS, see Revised Standard Plan RSP A77M1.
3. For details of steel posts and notched wood blocks used to construct MGS, see Revised Standard Plan RSP A77N2.
4. For additional installation details, see Revised Standard Plan RSP A77N3.
5. MGS post spacing to be 6'-3" center to center, except as otherwise noted.
6. For MGS typical layouts, see the A77P, A77Q and A77R Series of Standard Plans.
7. If railing is connected to terminal system end treatment, use 31" height terminal system end treatment.
8. For MGS end anchor details, see Revised Standard Plans RSP A77S1 and RSP A77T2.
9. For details of MGS transition to bridge railing, see Revised Standard Plan RSP A77U4.
10. For additional details of MGS connection to bridge railings, see Revised Standard Plans RSP A77U1, RSP A77U2 and RSP A77V1.
11. For dike positioning and MGS delineation details, see Revised Standard Plan RSP A77N4.
12. Notched face of block faces steel post.
13. Slotted hole for bolted connection of rail element to block and post. See "Section Thru Rail Element".
14. Slotted holes for splice bolts to overlap ends of rail element. See "Section Thru Rail Element".
15. Install posts in soil.

STATE OF CALIFORNIA
DEPARTMENT OF TRANSPORTATION

MIDWEST GUARDRAIL SYSTEM STANDARD RAILING SECTION (STEEL POST WITH NOTCHED WOOD OR NOTCHED RECYCLED PLASTIC BLOCK)

NO SCALE

RSP A77L2 DATED JULY 19, 2013 SUPPLEMENTS THE STANDARD PLANS BOOK DATED 2010.

REVISED STANDARD PLAN RSP A77L2

Dist	COUNTY	ROUTE	POST MILES TOTAL PROJECT	SHEET No.	TOTAL SHEETS
10	SJ	99	0.0/5.7	76	116

Randell D. Hiatt
REGISTERED CIVIL ENGINEER

July 19, 2013
PLANS APPROVAL DATE

REGISTERED PROFESSIONAL ENGINEER
Randell D. Hiatt
No. C50200
Exp. 6-30-15
CIVIL
STATE OF CALIFORNIA

THE STATE OF CALIFORNIA OR ITS OFFICERS OR AGENTS SHALL NOT BE RESPONSIBLE FOR THE ACCURACY OR COMPLETENESS OF SCANNED COPIES OF THIS PLAN SHEET.

TO ACCOMPANY PLANS DATED 5-2-16

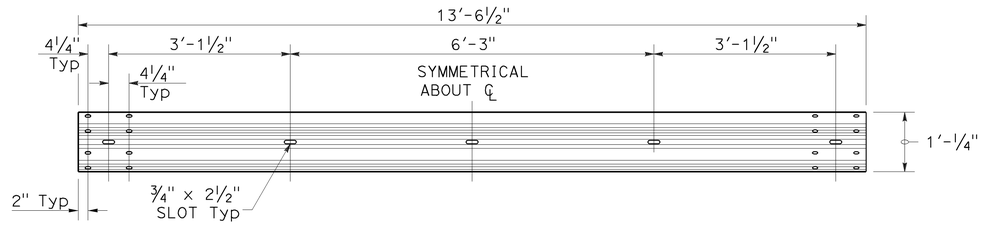

TYPICAL RAIL ELEMENT

NOTE:

1. Slotted holes for splice bolts to overlap ends of rail element.

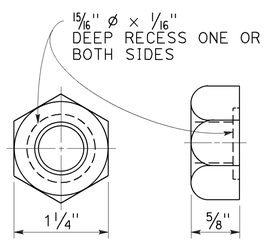

⅝" ø RECESS NUT

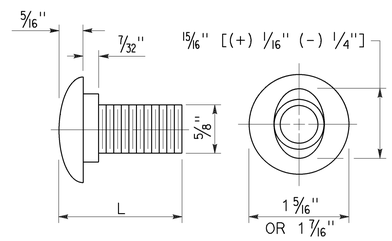

⅝" ø BUTTON HEAD BOLT

BUTTON HEAD BOLT

L	THREAD LENGTH
1⅜"	FULL THREAD LENGTH
2"	FULL THREAD LENGTH
10"	4" Min THREAD LENGTH
18"	4" Min THREAD LENGTH
20"	4" Min THREAD LENGTH
22"	4" Min THREAD LENGTH
26"	4" Min THREAD LENGTH
36"	4" Min THREAD LENGTH
** 2¾"	2" Min THREAD LENGTH
** 19"	4" Min THREAD LENGTH

** For nested rail applications.

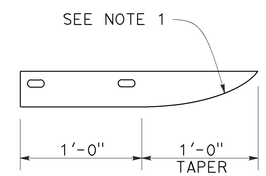

PLAN

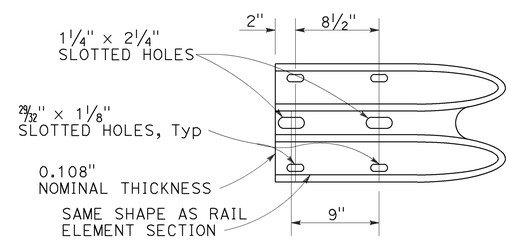

ELEVATION

END CAP
(TYPE A)

STATE OF CALIFORNIA
DEPARTMENT OF TRANSPORTATION

MIDWEST GUARDRAIL SYSTEM STANDARD HARDWARE

NO SCALE

RSP A77M1 DATED JULY 19, 2013 SUPPLEMENTS THE STANDARD PLANS BOOK DATED 2010.

REVISED STANDARD PLAN RSP A77M1

2010 REVISED STANDARD PLAN RSP A77M1

7-3-13

Dist	COUNTY	ROUTE	POST MILES TOTAL PROJECT	SHEET No.	TOTAL SHEETS
10	SJ	99	0.0/5.7	77	116

Randell D. Hiatt
REGISTERED CIVIL ENGINEER

July 19, 2013
PLANS APPROVAL DATE

REGISTERED PROFESSIONAL ENGINEER
Randell D. Hiatt
No. C50200
Exp. 6-30-15
CIVIL
STATE OF CALIFORNIA

THE STATE OF CALIFORNIA OR ITS OFFICERS OR AGENTS SHALL NOT BE RESPONSIBLE FOR THE ACCURACY OR COMPLETENESS OF SCANNED COPIES OF THIS PLAN SHEET.

TO ACCOMPANY PLANS DATED 5-2-16

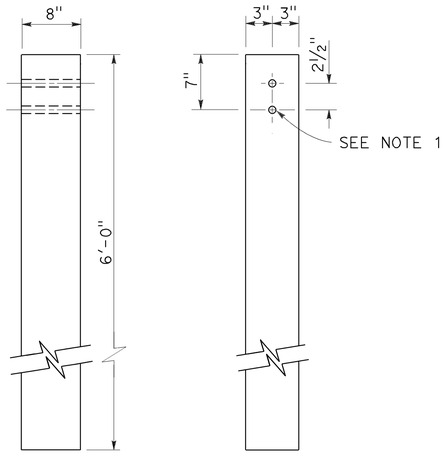

SIDE FRONT

6" x 8" WOOD POST
See Note 3

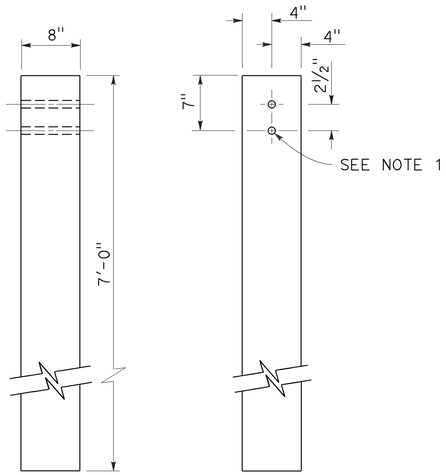

SIDE FRONT

8" x 8" WOOD POST
See Note 4

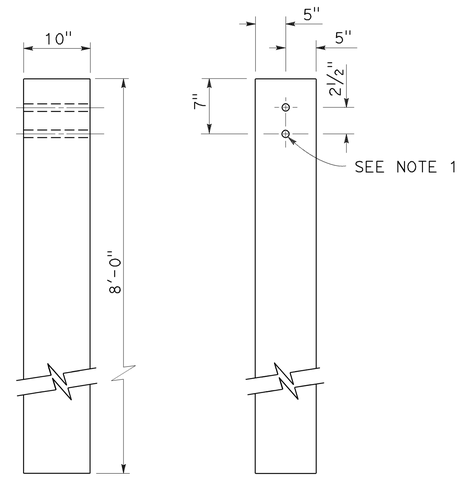

SIDE FRONT

10" x 10" WOOD POST
See Note 5

NOTES:

1. All holes in wood posts and blocks shall be 3/4" Dia ± 1/16".
2. Dimensions shown for wood post are nominal.
3. This post and block combination used for standard line post sections of MGS.
4. This post and 8" x 12" block combination used for line post sections of MGS on narrow roadways.
5. This post and 8" x 12" block combination is typically used where strengthened line post sections of MGS are warranted to shield fixed objects.
6. See Revised Standard Plan RSP A77L3 for use of 6" x 8" and 8" x 8" wood blocks.

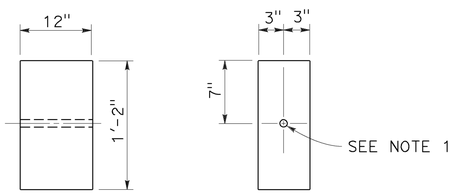

SIDE FRONT

6" x 12" WOOD BLOCK
See Note 3

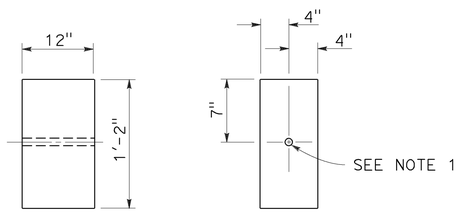

SIDE FRONT

8" x 12" WOOD BLOCK

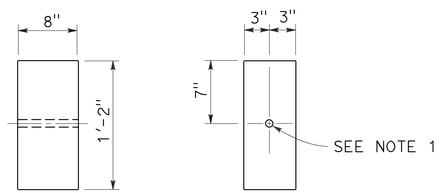

SIDE FRONT

6" x 8" WOOD BLOCK
Only for use with metal beam guard rail see Note 6

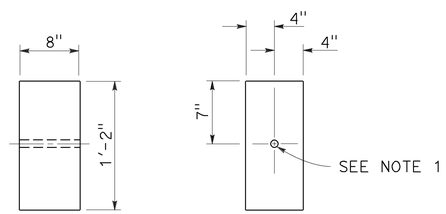

SIDE FRONT

8" x 8" WOOD BLOCK
Only for use with metal beam guard rail see Note 6

STATE OF CALIFORNIA
DEPARTMENT OF TRANSPORTATION

MIDWEST GUARDRAIL SYSTEM WOOD POST AND WOOD BLOCK DETAILS

NO SCALE

RSP A77N1 DATED JULY 19, 2013 SUPPLEMENTS THE STANDARD PLANS BOOK DATED 2010.

REVISED STANDARD PLAN RSP A77N1

2010 REVISED STANDARD PLAN RSP A77N1

7-3-13

Dist	COUNTY	ROUTE	POST MILES TOTAL PROJECT	SHEET No.	TOTAL SHEETS
10	SJ	99	0.0/5.7	78	116

Randell D. Hiatt
REGISTERED CIVIL ENGINEER

November 15, 2013
PLANS APPROVAL DATE

REGISTERED PROFESSIONAL ENGINEER
Randell D. Hiatt
No. C50200
Exp. 6-30-15
CIVIL
STATE OF CALIFORNIA

THE STATE OF CALIFORNIA OR ITS OFFICERS OR AGENTS SHALL NOT BE RESPONSIBLE FOR THE ACCURACY OR COMPLETENESS OF SCANNED COPIES OF THIS PLAN SHEET.

TO ACCOMPANY PLANS DATED 5-2-16

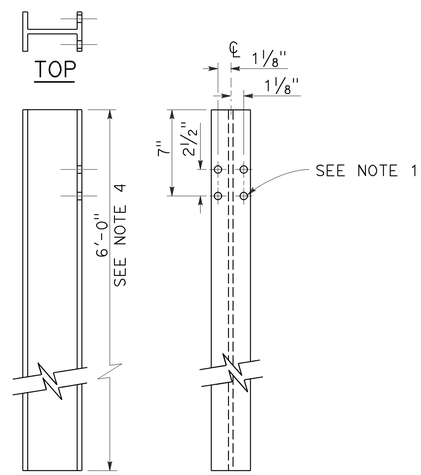

W6 x 9 OR W6 x 8.5
STEEL POST
See Note 4

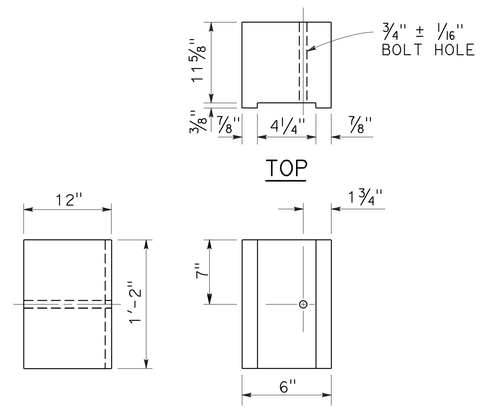

6" x 12"
NOTCHED WOOD BLOCK
See Notes 2 and 3

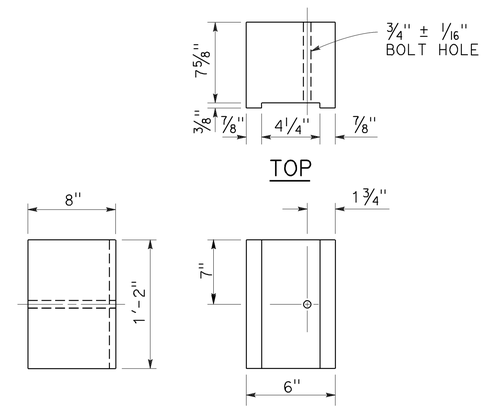

6" x 8"
NOTCHED WOOD BLOCK
Only for use with metal beam guard railing. See Note 5

NOTES:

1. All holes in steel post shall be 13/16" Dia maximum.
2. Dimensions shown for wood block are nominal.
3. Notched face of block faces steel post.
4. 6'-0" length posts to be used for typical roadway installation. See Revised Standard Plan RSP A77N3.
5. See Revised Standard Plan RSP A77L3 for use of 6" x 8" and 8" x 8" notched wood blocks.
6. This post and 8" x 12" block combination to be used for line post sections of MGS on narrow roadways and where strengthened line post sections of MGS are warranted to shield fixed objects.

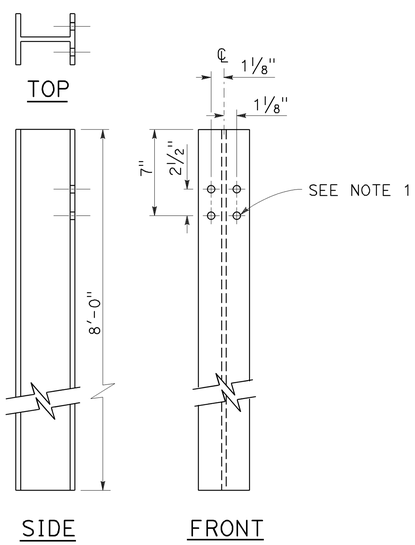

W6 x 15
STEEL POST
See Note 6

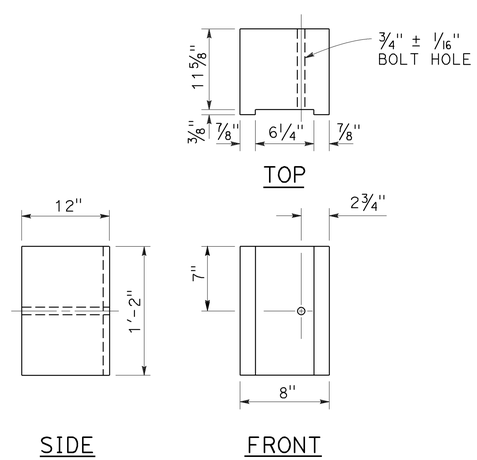

8" x 12"
NOTCHED WOOD BLOCK
See Notes 2 and 3

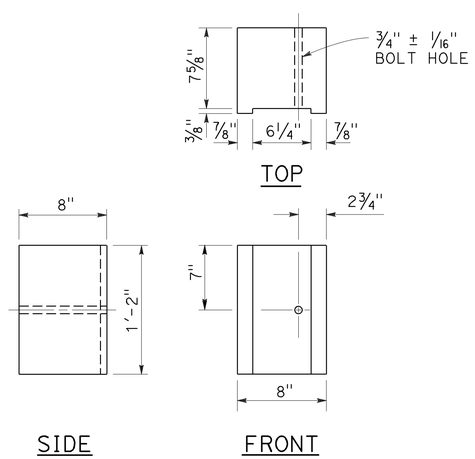

8" x 8"
NOTCHED WOOD BLOCK
Only for use with metal beam guard railing. See Note 5

STATE OF CALIFORNIA
DEPARTMENT OF TRANSPORTATION

MIDWEST GUARDRAIL SYSTEM STEEL POST AND NOTCHED WOOD BLOCK DETAILS

NO SCALE

RSP A77N2 DATED NOVEMBER 15, 2013 SUPERSEDES RSP A77N2
DATED JULY 19, 2013 THAT SUPPLEMENTS THE STANDARD PLANS BOOK DATED 2010.

REVISED STANDARD PLAN RSP A77N2

2010 REVISED STANDARD PLAN RSP A77N2

10-29-13

Dist	COUNTY	ROUTE	POST MILES TOTAL PROJECT	SHEET No.	TOTAL SHEETS
10	SJ	99	0.0/5.7	79	116

Randell D. Hiatt
REGISTERED CIVIL ENGINEER

November 15, 2013
PLANS APPROVAL DATE

REGISTERED PROFESSIONAL ENGINEER
Randell D. Hiatt
No. C50200
Exp. 6-30-15
CIVIL
STATE OF CALIFORNIA

THE STATE OF CALIFORNIA OR ITS OFFICERS OR AGENTS SHALL NOT BE RESPONSIBLE FOR THE ACCURACY OR COMPLETENESS OF SCANNED COPIES OF THIS PLAN SHEET.

TO ACCOMPANY PLANS DATED 5-2-16

2010 REVISED STANDARD PLAN RSP A77N3

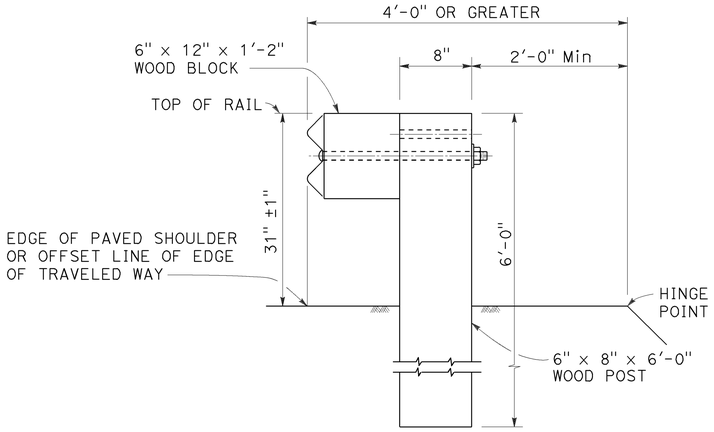

DETAIL A

TYPICAL ROADWAY INSTALLATION

See Note 1

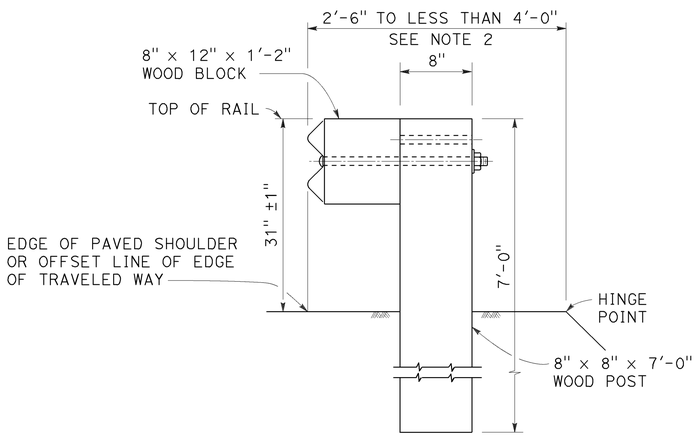

DETAIL B

NARROW ROADWAY INSTALLATION

See Note 1

POST EMBEDMENT

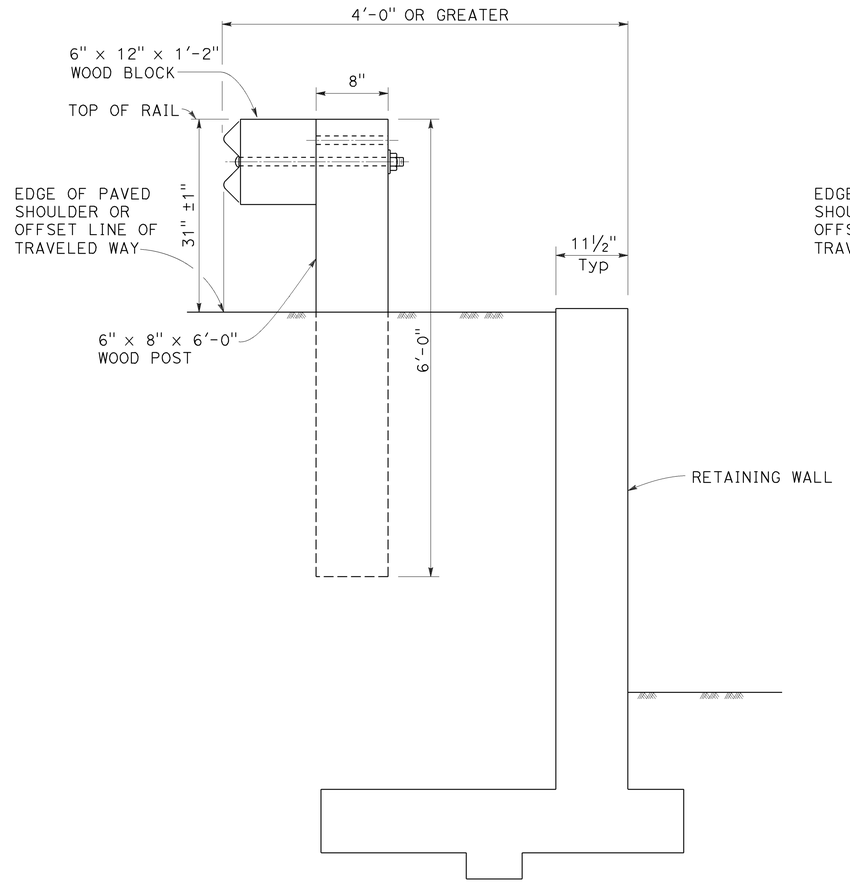

DETAIL C

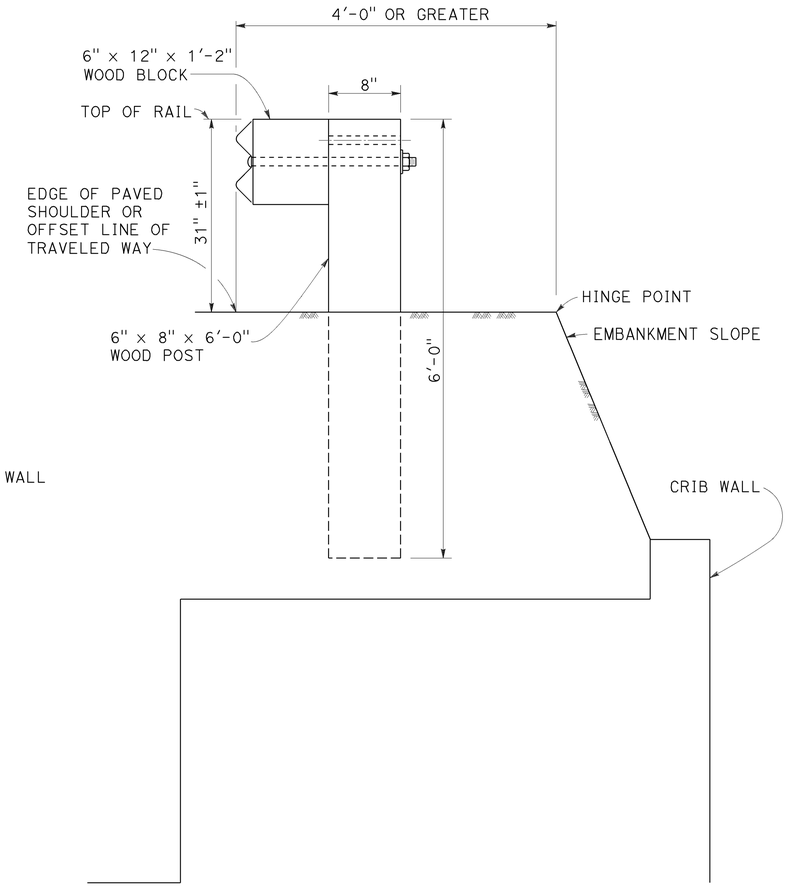

DETAIL D

INSTALLATION AT EARTH RETAINING WALLS

NOTES:

1. These installation details also applicable to steel line post installations. For Detail A, C, and D, where steel line post installations are constructed, W6 x 8.5 or W6 x 9 steel post, 6'-0" in length, with 6" x 12" x 1'-2" notched wood blocks or notched recycled plastic blocks are to be used in place of the size of wood post and wood block shown. For Detail B, where steel line post installations are constructed, W6 x 15 steel post, 8'-0" in length, with 8" x 12" x 1'-2" notched wood blocks or notched recycled plastic blocks are to be used in place of the size of wood post and wood block shown. For additional installation details, see Revised Standard Plan RSP A77L1 and RSP A77L2.
2. Where the distance between the face of the rail and the hinge point is less than 2'-6", see the Project Plans for special details.
3. For dike positioning with MGS installations, see Revised Standard Plan RSP A77N4.

STATE OF CALIFORNIA
DEPARTMENT OF TRANSPORTATION

MIDWEST GUARDRAIL SYSTEM TYPICAL LINE POST EMBEDMENT AND HINGE POINT OFFSET DETAILS

NO SCALE

RSP A77N3 DATED NOVEMBER 15, 2013 SUPERSEDES RSP A77N3 DATED JULY 19, 2013 THAT SUPPLEMENTS THE STANDARD PLANS BOOK DATED 2010.

REVISED STANDARD PLAN RSP A77N3

10-29-13

Dist	COUNTY	ROUTE	POST MILES TOTAL PROJECT	SHEET No.	TOTAL SHEETS
10	SJ	99	0.0/5.7	80	116

Randell D. Hiatt
REGISTERED CIVIL ENGINEER

July 19, 2013
PLANS APPROVAL DATE

REGISTERED PROFESSIONAL ENGINEER
Randell D. Hiatt
No. C50200
Exp. 6-30-15
CIVIL
STATE OF CALIFORNIA

THE STATE OF CALIFORNIA OR ITS OFFICERS OR AGENTS SHALL NOT BE RESPONSIBLE FOR THE ACCURACY OR COMPLETENESS OF SCANNED COPIES OF THIS PLAN SHEET.

TO ACCOMPANY PLANS DATED 5-2-16

NOTES:

1. When necessary to place dike more than 7" in front of face of MGS, only Type C dike may be used. For dike details, see Revised Standard Plan RSP A87B.
2. For standard railing post embedment, see Revised Standard Plan RSP A77N3.
3. MGS delineation to be used where shown on the Project Plans.
4. When dike or curb is placed under MGS, the maximum height of the dike or curb shall be 6". Mountable dike should not be used. For dike and curb details, see Revised Standard Plans RSP A87A and RSP A87B.
5. For details of typical distance between the face of rail and hinge point, see Revised Standard Plan RSP A77N3.
6. For steel line posts, use 1/4 - 20 self-tapping screws in 0.22" diameter holes or 1/4" bolts in 9/32" diameter holes.

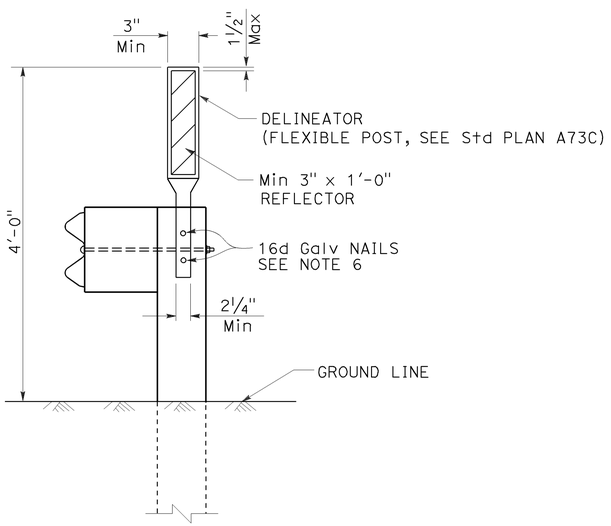

MGS DELINEATION
See Note 3

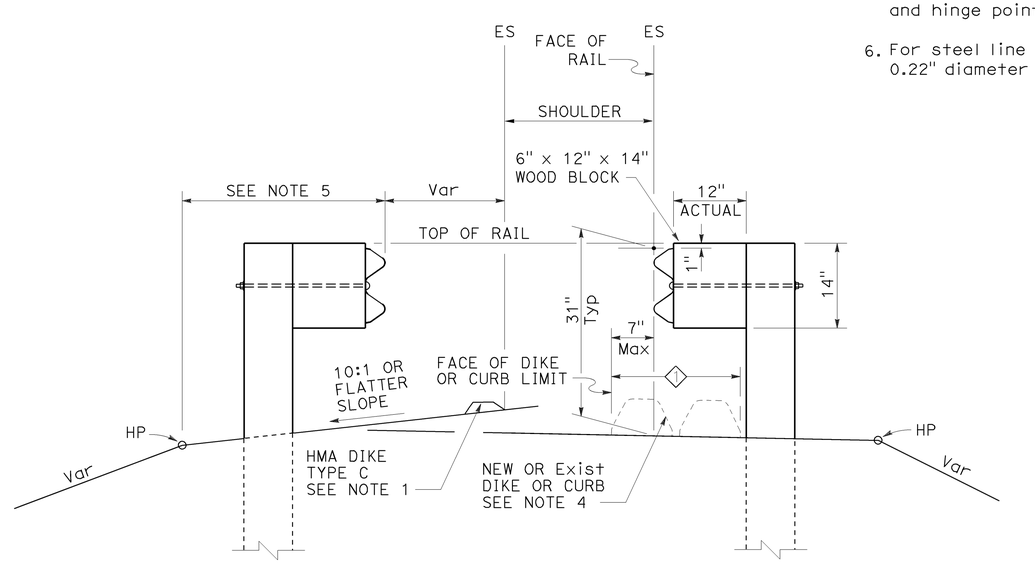

DIKE POSITIONING
See Note 1

1 PERMISSIBLE DIKE OR CURB PLACEMENT AREA

STATE OF CALIFORNIA
DEPARTMENT OF TRANSPORTATION

MIDWEST GUARDRAIL SYSTEM TYPICAL RAILING DELINEATION AND DIKE POSITIONING DETAILS

NO SCALE

RSP A77N4 DATED JULY 19, 2013 SUPPLEMENTS THE STANDARD PLANS BOOK DATED 2010.

REVISED STANDARD PLAN RSP A77N4

2010 REVISED STANDARD PLAN RSP A77N4

7-10-13

Dist	COUNTY	ROUTE	POST MILES TOTAL PROJECT	SHEET No.	TOTAL SHEETS
10	SJ	99	0.0/5.7	81	116

Randell D. Hiatt
REGISTERED CIVIL ENGINEER

July 19, 2013
PLANS APPROVAL DATE

REGISTERED PROFESSIONAL ENGINEER
Randell D. Hiatt
No. C50200
Exp. 6-30-15
CIVIL
STATE OF CALIFORNIA

THE STATE OF CALIFORNIA OR ITS OFFICERS OR AGENTS SHALL NOT BE RESPONSIBLE FOR THE ACCURACY OR COMPLETENESS OF SCANNED COPIES OF THIS PLAN SHEET.

TO ACCOMPANY PLANS DATED 5-2-16

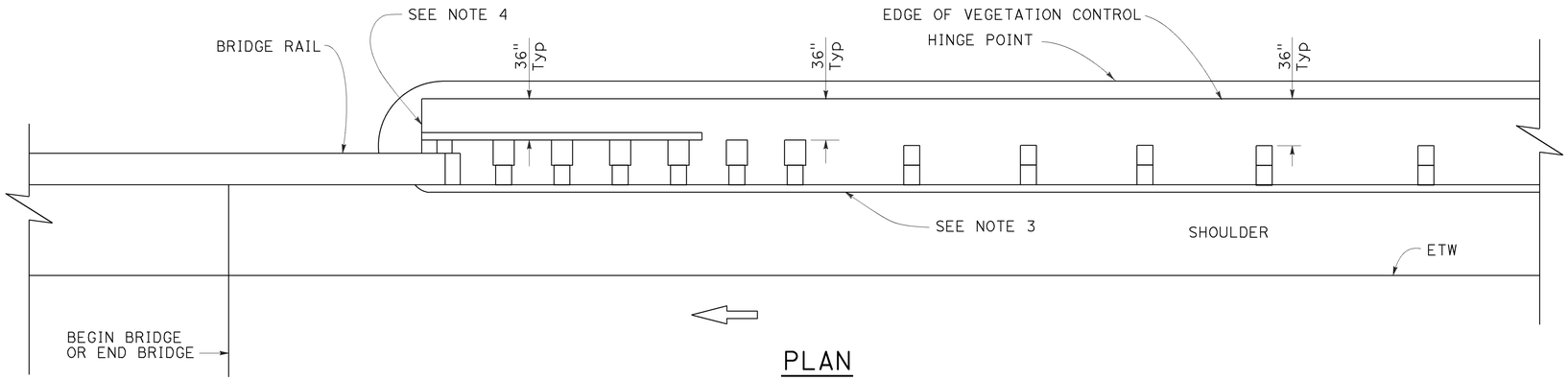

PLAN

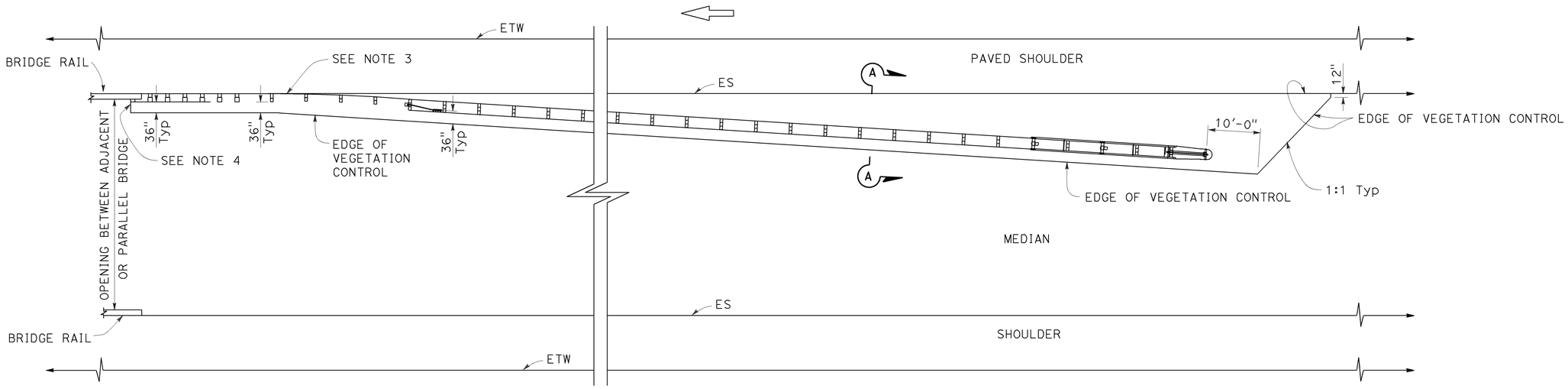

PLAN

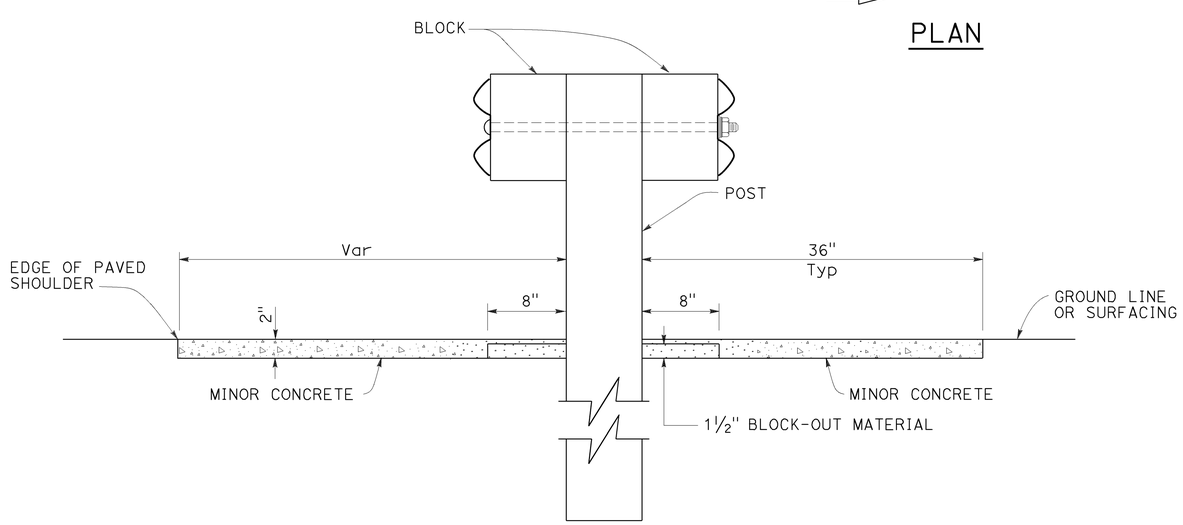

SECTION A-A

NOTES:

1. See Revised Standard Plan RSP A77N5 for additional vegetation control details.
2. Where the distance between back of post and hinge point is less than 42", construct vegetation control to 6" from hinge point while maintaining the 8" block-out at back of post. If the 8" block-out at back of post can not be maintained, construct vegetation control flush with the back edge of post.
3. Where dike is constructed under railing, construct vegetation control to back edge of dike. Where paved shoulder is constructed within 36" in front of the post, construct vegetation control to the edge of paved shoulder.
4. End vegetation control at end of backside rail element.

STATE OF CALIFORNIA
DEPARTMENT OF TRANSPORTATION

MIDWEST GUARDRAIL SYSTEM TYPICAL VEGETATION CONTROL AT STRUCTURE APPROACH

NO SCALE

RSP A77N7 DATED JULY 19, 2013 SUPPLEMENTS THE STANDARD PLANS BOOK DATED 2010.

REVISED STANDARD PLAN RSP A77N7

2010 REVISED STANDARD PLAN RSP A77N7

6-12-13

Dist	COUNTY	ROUTE	POST MILES TOTAL PROJECT	SHEET No.	TOTAL SHEETS
10	SJ	99	0.0/5.7	82	116

Randell D. Hiatt
REGISTERED CIVIL ENGINEER

July 19, 2013
PLANS APPROVAL DATE

REGISTERED PROFESSIONAL ENGINEER
Randell D. Hiatt
No. C50200
Exp. 6-30-15
CIVIL
STATE OF CALIFORNIA

THE STATE OF CALIFORNIA OR ITS OFFICERS OR AGENTS SHALL NOT BE RESPONSIBLE FOR THE ACCURACY OR COMPLETENESS OF SCANNED COPIES OF THIS PLAN SHEET.

TO ACCOMPANY PLANS DATED 5-2-16

NOTES:

1. See Revised Standard Plan RSP A77N5 for additional vegetation control details.
2. Where the distance between back of post and hinge point is less than 42", construct vegetation control to 6" from hinge point while maintaining the 8" block-out at back of post. If the 8" block-out at back of post can not be maintained, construct vegetation control flush with the back edge of post.
3. Where dike is constructed under railing, construct vegetation control to back edge of dike. Where paved shoulder is constructed within 36" in front of the post, construct vegetation control to the edge of paved shoulder.

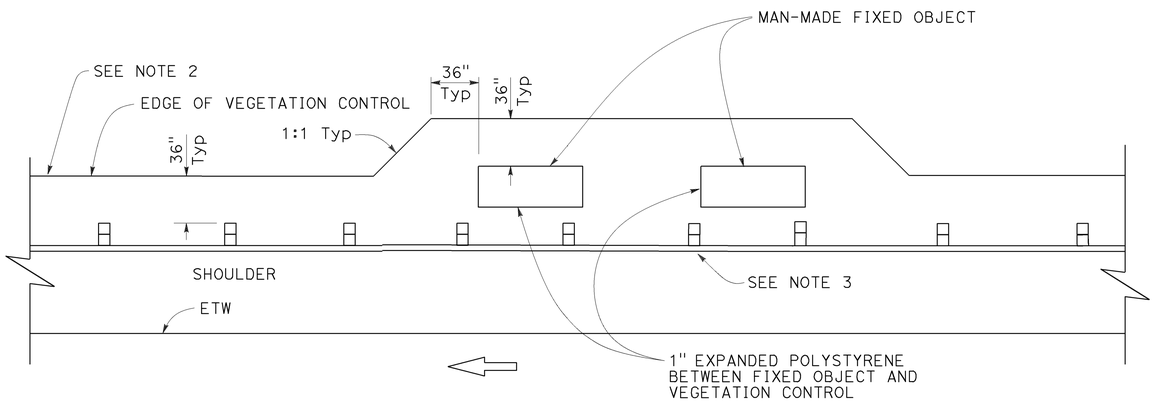

PLAN

Fixed object(s) on shoulder

STATE OF CALIFORNIA
DEPARTMENT OF TRANSPORTATION

MIDWEST GUARDRAIL SYSTEM TYPICAL VEGETATION CONTROL AT FIXED OBJECT

NO SCALE

RSP A77N8 DATED JULY 19, 2013 SUPPLEMENTS THE STANDARD PLANS BOOK DATED 2010.

REVISED STANDARD PLAN RSP A77N8

2010 REVISED STANDARD PLAN RSP A77N8

6-12-13

Dist	COUNTY	ROUTE	POST MILES TOTAL PROJECT	SHEET No.	TOTAL SHEETS
10	SJ	99	0.0/5.7	83	116

Randell D. Hiatt
REGISTERED CIVIL ENGINEER

July 19, 2013
PLANS APPROVAL DATE

REGISTERED PROFESSIONAL ENGINEER
Randell D. Hiatt
No. C50200
Exp. 6-30-15
CIVIL
STATE OF CALIFORNIA

THE STATE OF CALIFORNIA OR ITS OFFICERS OR AGENTS SHALL NOT BE RESPONSIBLE FOR THE ACCURACY OR COMPLETENESS OF SCANNED COPIES OF THIS PLAN SHEET.

TO ACCOMPANY PLANS DATED 5-2-16

2010 REVISED STANDARD PLAN RSP A77N9

NOTES:

1. See Revised Standard Plan RSP A77N5 for additional vegetation control details.
2. Where dike is constructed under railing, construct vegetation control to back edge of dike. Where paved shoulder is constructed within 36" in front of the post, construct vegetation control to the edge of paved shoulder.

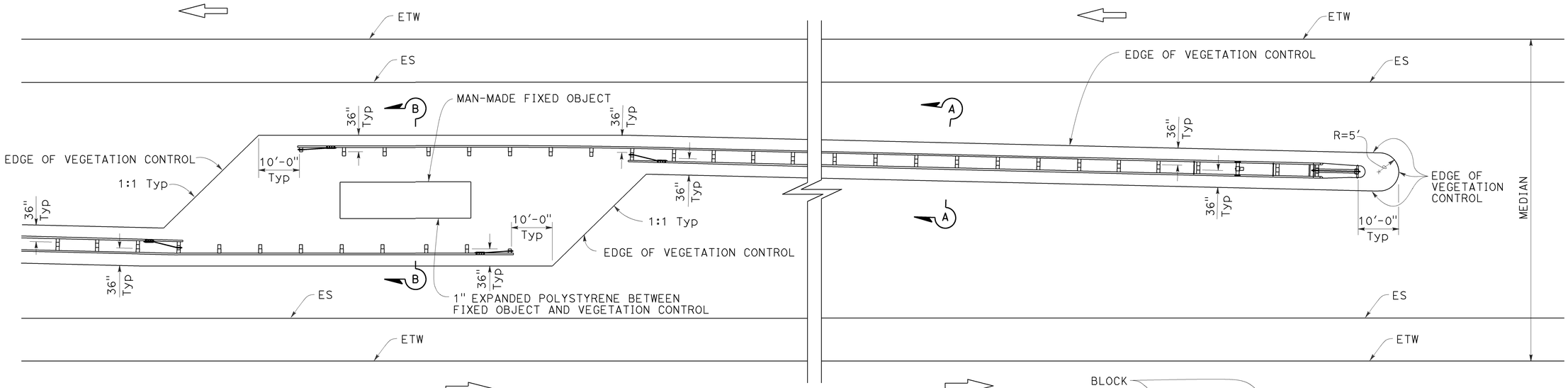

PLAN

Fixed object(s) in median

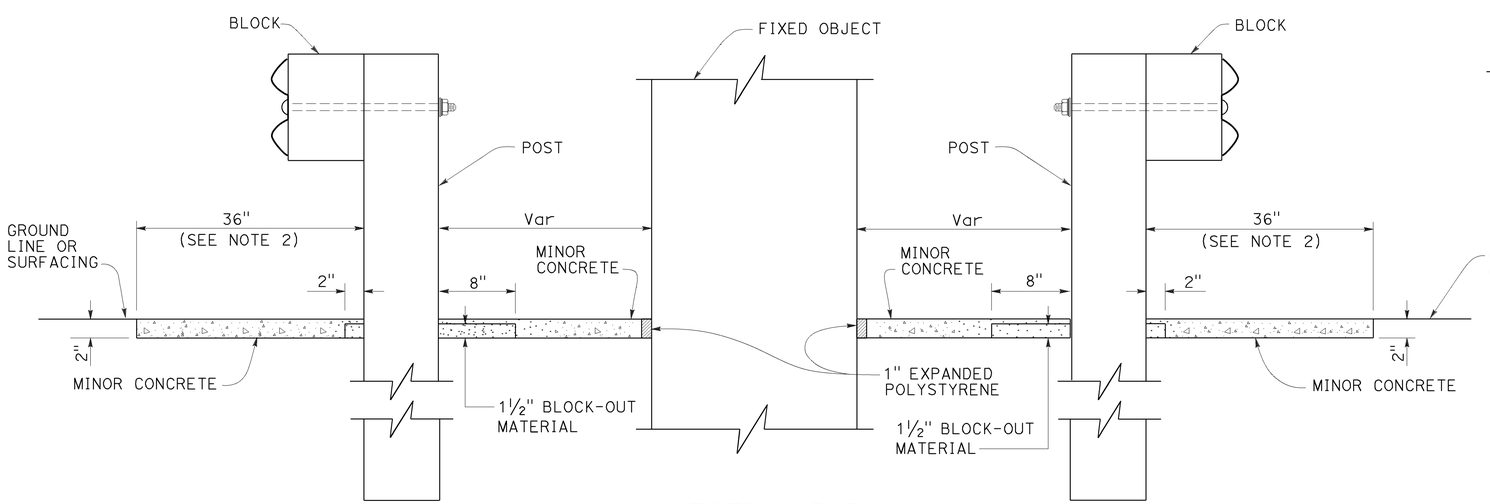

SECTION B-B

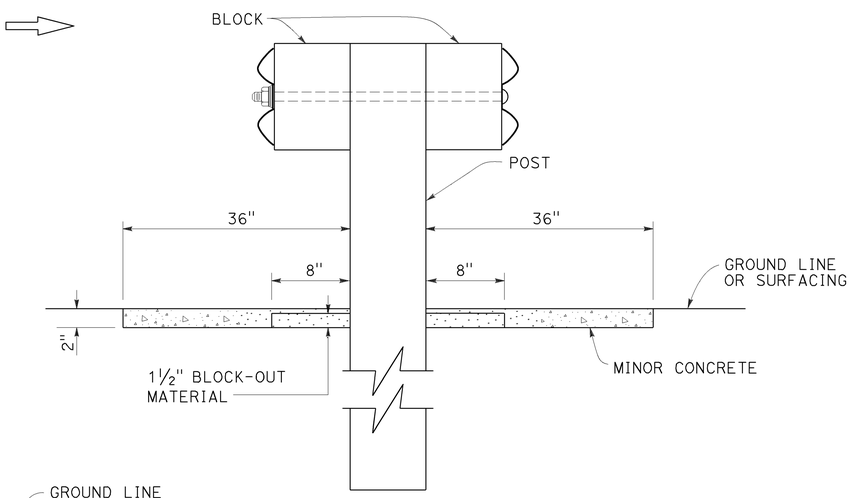

SECTION A-A

STATE OF CALIFORNIA
DEPARTMENT OF TRANSPORTATION

MIDWEST GUARDRAIL SYSTEM TYPICAL VEGETATION CONTROL AT FIXED OBJECT

NO SCALE

RSP A77N9 DATED JULY 19, 2013 SUPPLEMENTS THE STANDARD PLANS BOOK DATED 2010.

REVISED STANDARD PLAN RSP A77N9

6-12-13

Dist	COUNTY	ROUTE	POST MILES TOTAL PROJECT	SHEET No.	TOTAL SHEETS
10	SJ	99	0.0/5.7	84	116

Randell D. Hiatt
REGISTERED CIVIL ENGINEER

July 19, 2013
PLANS APPROVAL DATE

REGISTERED PROFESSIONAL ENGINEER
Randell D. Hiatt
No. C50200
Exp. 6-30-15
CIVIL
STATE OF CALIFORNIA

THE STATE OF CALIFORNIA OR ITS OFFICERS OR AGENTS SHALL NOT BE RESPONSIBLE FOR THE ACCURACY OR COMPLETENESS OF SCANNED COPIES OF THIS PLAN SHEET.

TO ACCOMPANY PLANS DATED 5-2-16

2010 REVISED STANDARD PLAN RSP A77N10

NOTES:

1. See Revised Standard Plan RSP A77N5 for additional vegetation control details.
2. Where dike is constructed under railing, construct vegetation control to back edge of dike. Where paved shoulder is constructed within 36" in front of the post, construct vegetation control to the edge of paved shoulder.

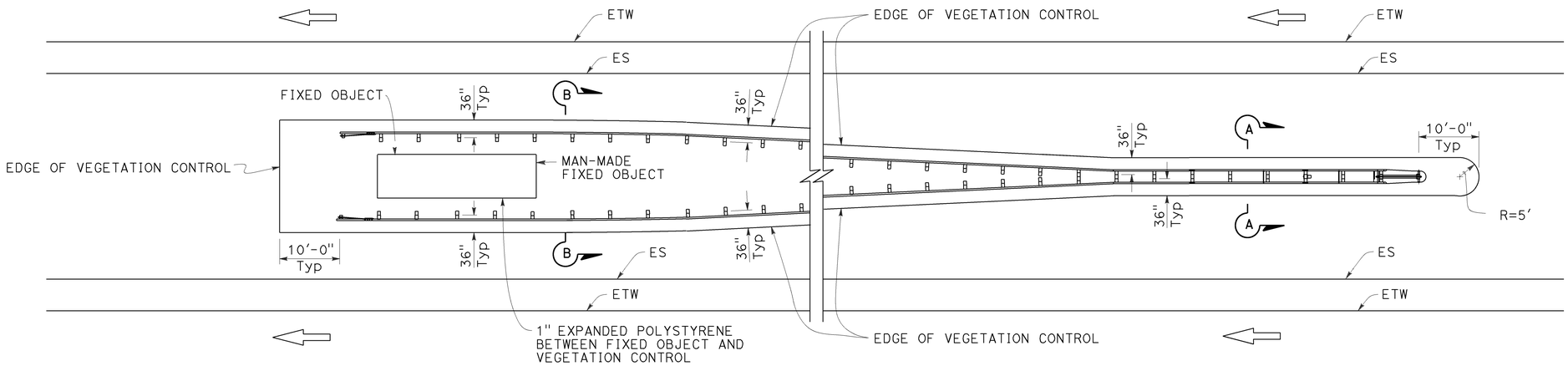

PLAN

Fixed object(s) between separate roadbeds
(One-Way Traffic)

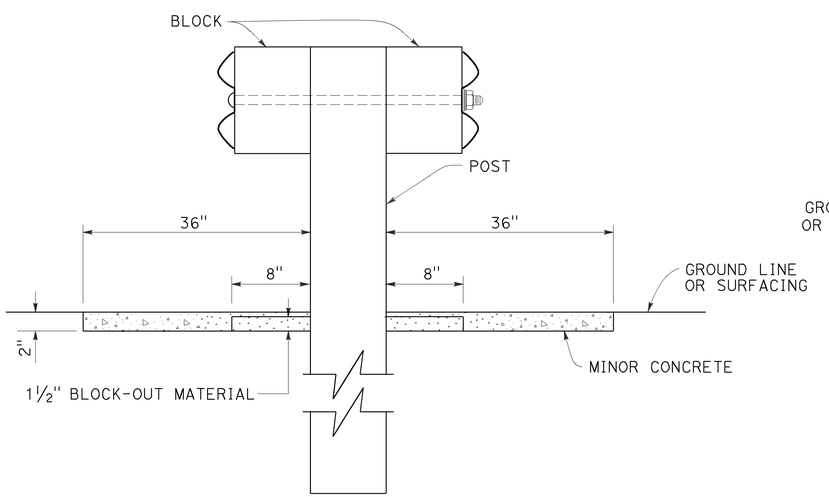

SECTION A-A

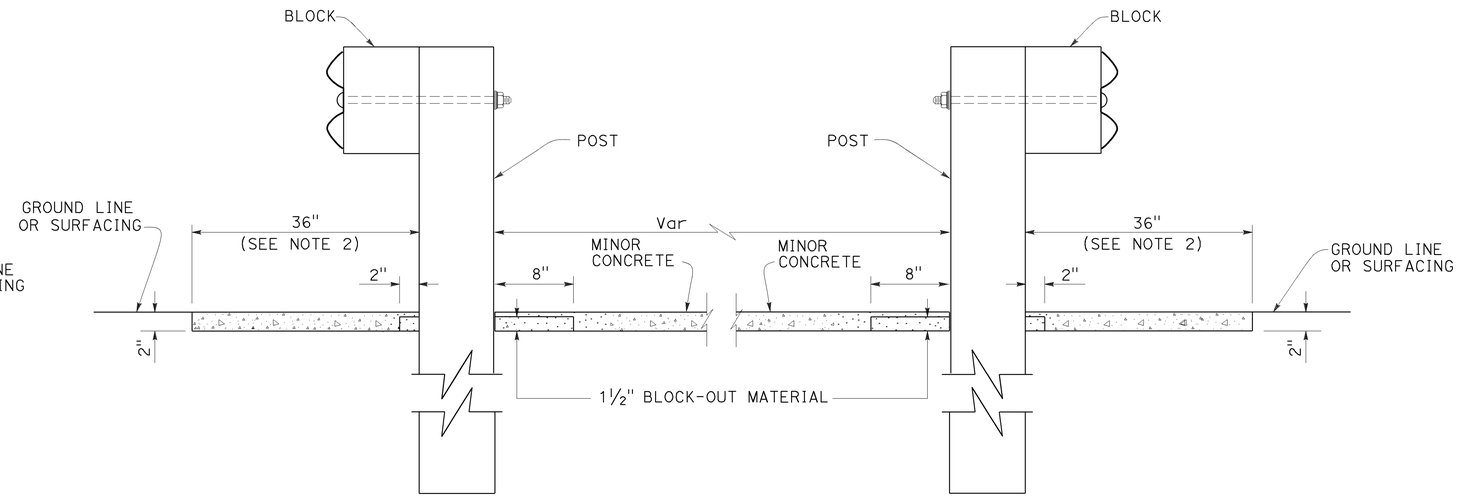

SECTION B-B

STATE OF CALIFORNIA
DEPARTMENT OF TRANSPORTATION

MIDWEST GUARDRAIL SYSTEM TYPICAL VEGETATION CONTROL AT FIXED OBJECT

NO SCALE

RSP A77N10 DATED JULY 19, 2013 SUPPLEMENTS THE STANDARD PLANS BOOK DATED 2010.

REVISED STANDARD PLAN RSP A77N10

6-12-13

Dist	COUNTY	ROUTE	POST MILES TOTAL PROJECT	SHEET No.	TOTAL SHEETS
10	SJ	99	0.0/5.7	85	116

Randell D. Hiatt
REGISTERED CIVIL ENGINEER

August 14, 2015
PLANS APPROVAL DATE

REGISTERED PROFESSIONAL ENGINEER
Randell D. Hiatt
No. C50200
Exp. 6-30-17
CIVIL
STATE OF CALIFORNIA

THE STATE OF CALIFORNIA OR ITS OFFICERS OR AGENTS SHALL NOT BE RESPONSIBLE FOR THE ACCURACY OR COMPLETENESS OF SCANNED COPIES OF THIS PLAN SHEET.

TO ACCOMPANY PLANS DATED 5-2-16

2010 REVISED STANDARD PLAN RSP A77Q1

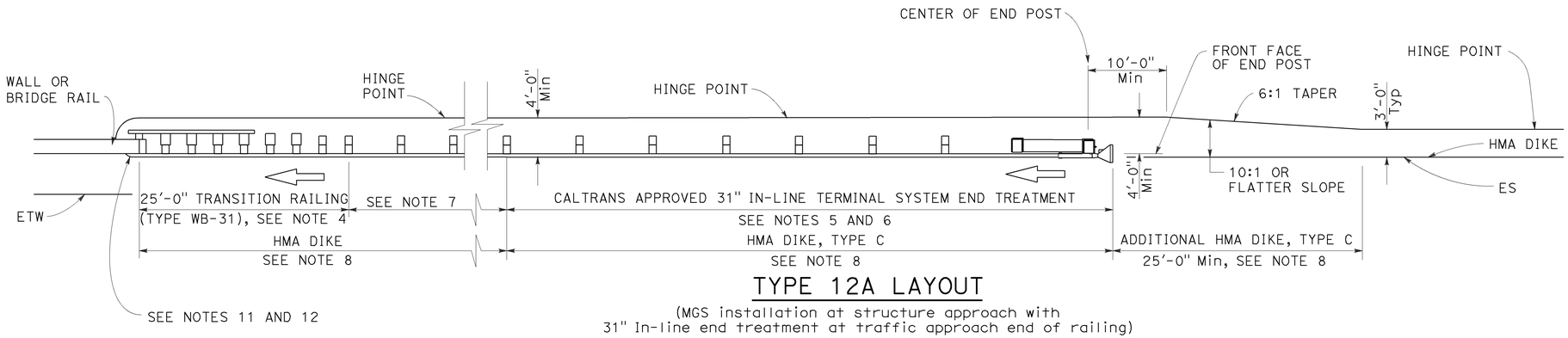

TYPE 12A LAYOUT

(MGS installation at structure approach with
31" In-line end treatment at traffic approach end of railing)
See Note 9

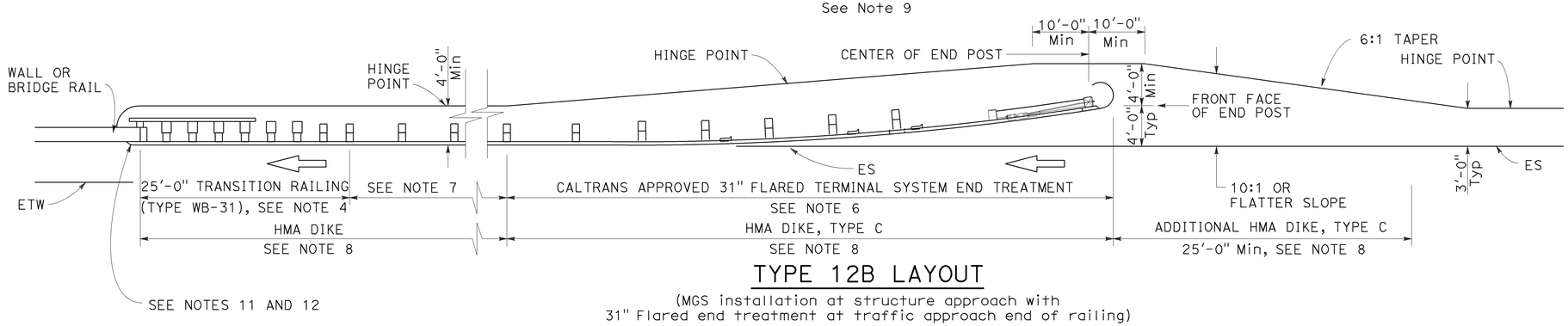

TYPE 12B LAYOUT

(MGS installation at structure approach with
31" Flared end treatment at traffic approach end of railing)
See Note 9

NOTES:

1. Line post, blocks and hardware to be used are shown on Revised Standard Plans RSP A77L1, RSP A77L2, RSP A77M1, RSP A77N1 and RSP A77N2.
2. MGS post spacing to be 6'-3" center to center, except as otherwise noted.
3. Except as noted, line posts are 6" x 8" x 6'-0" wood with 6" x 12" x 1'-2" wood blocks. W6 x 8.5 or W6 x 9 steel posts, 6'-0" in length, with 6" x 12" x 1'-2" notched wood blocks or plastic blocks may be used for 6" x 8" x 6'-0" wood posts with 6" x 12" x 1'-2" wood blocks where applicable and when specified.
4. For Transition Railing (Type WB-31) details for Types 12A and 12B Layouts, see Revised Standard Plan RSP A77U4.
5. 31" in-line terminal system end treatments are used where site conditions will not accommodate a 31" flared end treatment.
6. The type of 31" terminal system end treatment to be used will be shown on the Project Plans.
7. Dependent on site conditions (embankment height, side slopes, or other fixed objects), it may be advisable to construct additional guard railing (a length equal to multiples of 12'-6" with 6'-3" post spacing) between the transition railing and end treatment. A 12.5 degree angle of departure can be drawn on the Project Plans from the edge of traveled way through the outer most point of the fixed object to determine the additional length of railing needed.
8. Where placement of dike is required with guard railing installations, see Revised Standard Plan RSP A77N4 for dike positioning details.
9. Type 12A or Type 12B Layouts are typically used:
   a. To the right of approaching traffic, at the end of a structure, on two-lane conventional highway where the roadbed width across the structure is less than 40 feet.
   b. To the left of approaching traffic, at the end of a structure, on two-lane conventional highway where the roadbed width across the structure is less than 40 feet.
   c. To the right of approaching traffic at the end of each structure on multilane freeways or expressways with separate adjacent or parallel bridges.
   d. To the right of approaching traffic at the end of the structure on multilane freeways or expressways with decked median on the bridge.
10. See Revised Standard Plan RSP A77Q3 for typical layout used left of approaching traffic at the ends of each structure on multilane freeways or expressways with separate adjacent or parallel bridges.
11. For additional details of typical connections to bridge rail, see Connection Detail AA on Revised Standard Plans RSP A77U1 and RSP A77U2 and Connection Detail FF on Revised Standard Plans RSP A77V1 and RSP A77V2.
12. For additional details of a typical connection to walls or abutments, see Revised Standard Plan RSP A77U3.

STATE OF CALIFORNIA
DEPARTMENT OF TRANSPORTATION

MIDWEST GUARDRAIL SYSTEM TYPICAL LAYOUTS FOR STRUCTURE APPROACH

NO SCALE

RSP A77Q1 DATED AUGUST 14, 2015 SUPERSEDES RSP A77Q1 DATED JULY 19, 2013 THAT SUPPLEMENTS THE STANDARD PLANS BOOK DATED 2010.

REVISED STANDARD PLAN RSP A77Q1

8-12-15

Dist	COUNTY	ROUTE	POST MILES TOTAL PROJECT	SHEET No.	TOTAL SHEETS
10	SJ	99	0.0/5.7	86	116

Randell D. Hiatt
REGISTERED CIVIL ENGINEER

August 14, 2015
PLANS APPROVAL DATE

REGISTERED PROFESSIONAL ENGINEER
Randell D. Hiatt
No. C50200
Exp. 6-30-17
CIVIL
STATE OF CALIFORNIA

THE STATE OF CALIFORNIA OR ITS OFFICERS OR AGENTS SHALL NOT BE RESPONSIBLE FOR THE ACCURACY OR COMPLETENESS OF SCANNED COPIES OF THIS PLAN SHEET.

TO ACCOMPANY PLANS DATED 5-2-16

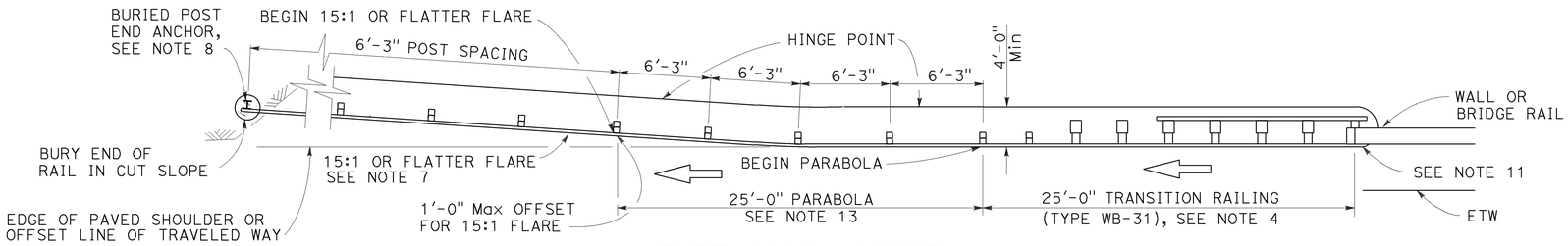

TYPE 12CC LAYOUT

(MGS installation at structure departure with a Buried end anchor treatment at trailing end of railing)
See Notes 9 and 10

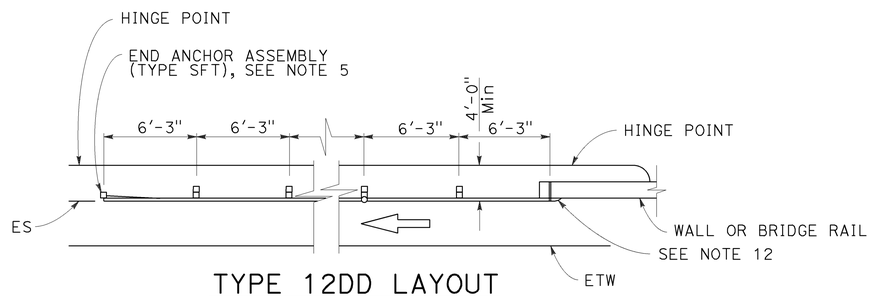

TYPE 12DD LAYOUT

(MGS installation at structure departure With end anchor assembly at trailing end of railing)
See Notes 6 and 9

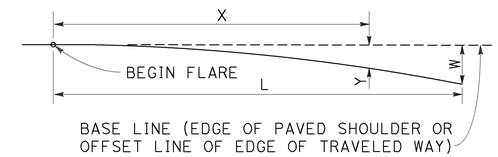

$$Y = \frac{WX^2}{L^2}$$

Y = OFFSET FROM BASE LINE
W = MAXIMUM OFFSET
X = DISTANCE ALONG BASE LINE
L = LENGTH OF FLARE

PARABOLIC FLARE OFFSETS

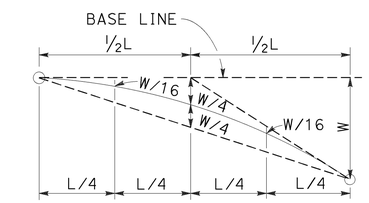

TYPICAL PARABOLIC LAYOUT

NOTES:

1. Line post, blocks and hardware to be used are shown on Revised Standard Plans RSP A77L1, RSP A77L2, RSP A77M1, RSP A77N1 and RSP A77N2.
2. MSG post spacing to be 6'-3" center to center, except as otherwise noted.
3. Except as noted, line posts are 6" x 8" x 6'-0" wood with 6" x 12" x 1'-2" wood blocks. W6 x 8.5 or W6 x 9 steel posts, 6'-0" in length, with 6" x 12" x 1'-2" notched wood blocks or notched recycled plastic blocks may be used for 6" x 8" x 6'-0" wood line posts with 6" x 12" x 1'-2" wood blocks where applicable and when specified.
4. For Transition Railing (Type WB-31) details for Type 12CC Layout, see Revised Standard Plan RSP A77U4.
5. For details of End Anchor Assembly (Type SFT) used with Type 12DD Layout, see Revised Standard Plan RSP A77S1.
6. Type 12DD layout is typically used to the right of traffic departing a structure on two-way conventional highways where the roadbed width across the structure is equal to or greater than 40 feet and MGS is recommended (embankment height, side slopes, other fixed objects). Length of railing to be equal to multiples of 12'-6". For MGS connection details to bridge rail, see Revised Standard Plans RSP A77U1 and RSP A77V1. For MGS connection details to wall, see Revised Standard Plan RSP A77U3.
7. The 15:1 or flatter flare for Type 12CC Layout is based on the edge of the paved shoulder or offset line of edge of the traveled way. The length of MGS within the 15:1 or flatter flare is based on site conditions and should be a length equal to multiples of 12'-6".
8. For details of the buried post end anchor used with Type 12CC Layout, see Revised Standard Plan RSP A77T2.
9. Where placement of dike is required with MGS installations, see Revised Standard Plan RSP A77N4 for dike positioning details.
10. Type 12CC Layout is typically used to the right of traffic departing a structure on two-way conventional highways where the roadbed width across the structure is less than 40 feet.
11. For additional details of a typical connection to bridge rail for Layout Type 12CC, see Connection Detail CC on Revised Standard Plan RSP A77U2 and Connection Detail HH on Revised Standard Plan RSP A77V2.
12. For additional details of a typical connection to bridge rail for Layout Type 12DD, see Connection Detail BB on Revised Standard Plan RSP A77U1 and Connection Detail GG on Revised Standard Plan RSP A77V1.
13. For typical flare offsets for 25'-0" length parabola with maximum offset of 1'-0", see Revised Standard Plan RSP A77P1.

STATE OF CALIFORNIA
DEPARTMENT OF TRANSPORTATION

MIDWEST GUARDRAIL SYSTEM TYPICAL LAYOUTS FOR STRUCTURE DEPARTURE

NO SCALE

RSP A77Q5 DATED AUGUST 14, 2015 SUPERSEDES RSP A77Q5 DATED JULY 19, 2013 THAT SUPPLEMENTS THE STANDARD PLANS BOOK DATED 2010.

REVISED STANDARD PLAN RSP A77Q5

2010 REVISED STANDARD PLAN RSP A77Q5

8-13-15

Dist	COUNTY	ROUTE	POST MILES TOTAL PROJECT	SHEET No.	TOTAL SHEETS
10	SJ	99	0.0/5.7	87	116

Randell D. Hiatt
REGISTERED CIVIL ENGINEER

July 19, 2013
PLANS APPROVAL DATE

REGISTERED PROFESSIONAL ENGINEER Randell D. Hiatt No. C50200 Exp. 6-30-15 CIVIL STATE OF CALIFORNIA

THE STATE OF CALIFORNIA OR ITS OFFICERS OR AGENTS SHALL NOT BE RESPONSIBLE FOR THE ACCURACY OR COMPLETENESS OF SCANNED COPIES OF THIS PLAN SHEET.

TO ACCOMPANY PLANS DATED 5-2-16

2010 REVISED STANDARD PLAN RSP A77R3

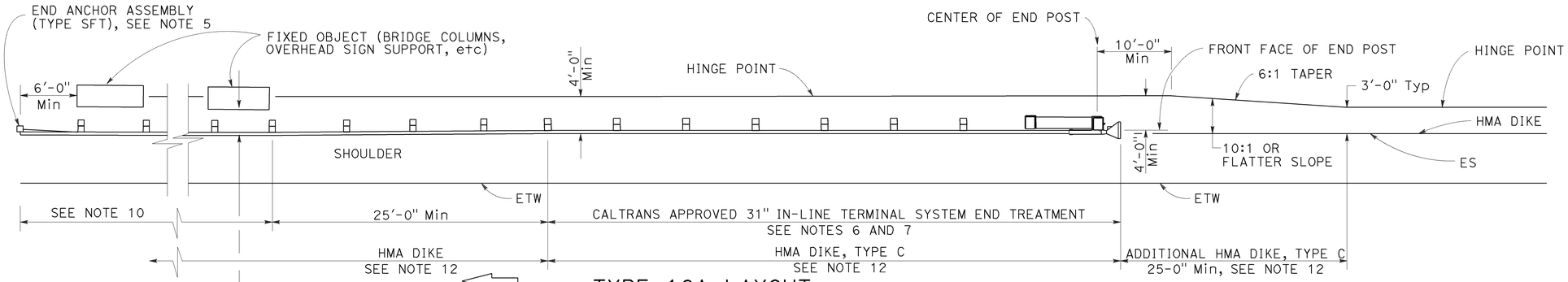

TYPE 16A LAYOUT

(MGS installation at roadside fixed object or objects with 31" in-line end treatment at traffic approach end of railing)
See Notes 11 and 12

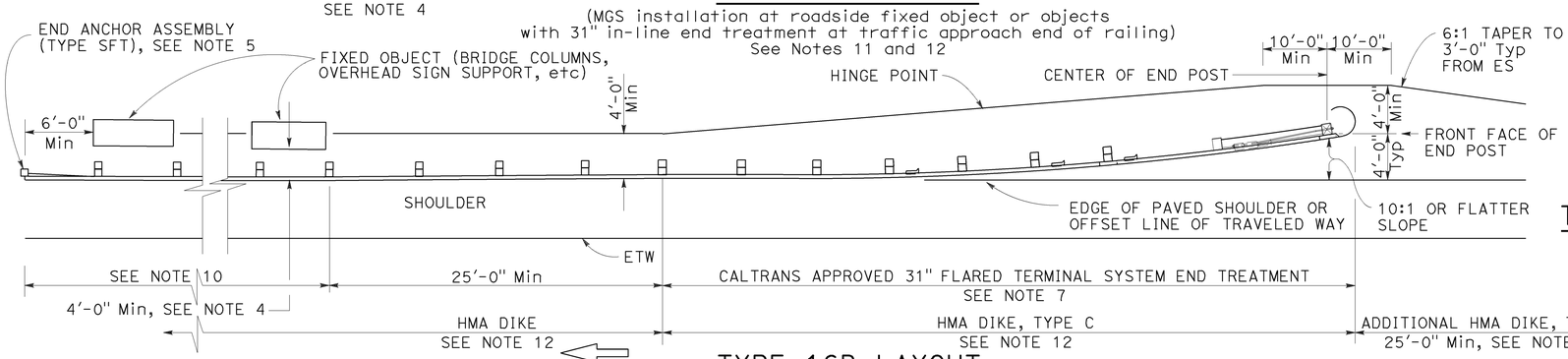

TYPE 16B LAYOUT

(MGS installation at roadside fixed object or objects with 31' flared end treatment at traffic approach end of railing)
See Notes 11 and 12

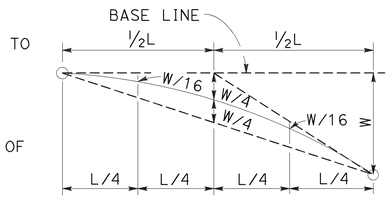

TYPIC AL PARABOLIC LAYOUT

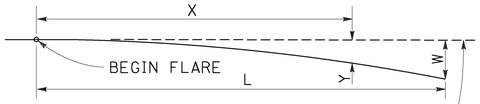

BASE LINE (EDGE OF PAVED SHOULDER OR OFFSET LINE OF EDGE OF TRAVELED WAY)

$$Y = \frac{WX^2}{L^2}$$

Y = OFFSET FROM BASE LINE
W = MAXIMUM OFFSET
X = DISTANCE ALONG BASE LINE
L = LENGTH OF FLARE

PARABOLIC FLARE OFFSETS

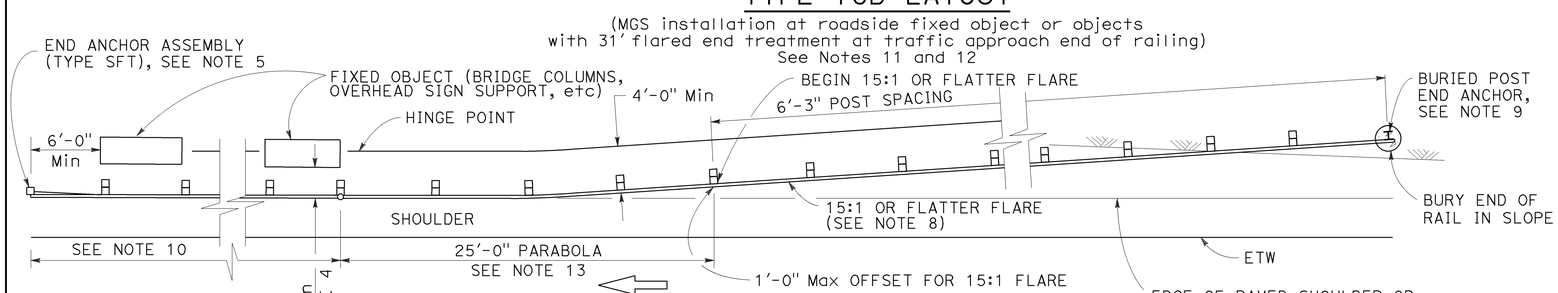

TYPE 16C LAYOUT

(MGS installation at roadside fixed object or objects with a buried end anchor treatment at traffic approach end of railing)
See Notes 11 and 12

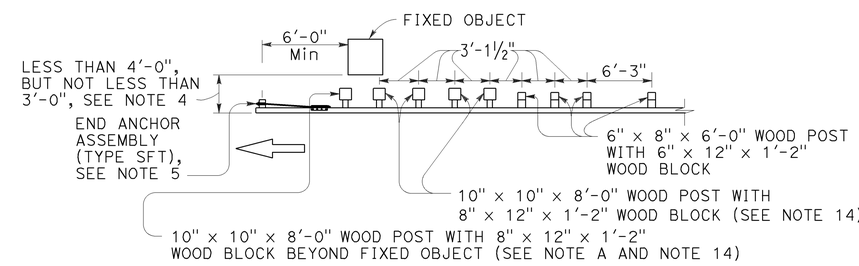

NOTE A: For a series of fixed objects (bridge columns, overhead sign supports, etc.) additional 10" x 10" x 8'-0" wood post with 8" x 12" x 1'-2" wood blocks at 3'-1½" center to center spacing are to be used between fixed objects.

STRENGTHENED MIDWEST GUARDRAIL SYSTEM SECTIONS FOR FIXED OBJECT

Use strengthened MGS sections with Types 16A, 16B or 16C layouts where minimum clearance between the face of the railing and fixed object(s) is less than 4'-0", but not less than 3'-0". See Note 4

NOTES:

1. Line post, blocks and hardware to be used are shown on Revised Standard Plans RSP A77L1, RSP A77L2, RSP A77M1, RSP A77N1 and RSP A77N2.
2. MGS post spacing to be 6'-3" center to center, except as otherwise noted.
3. Except as noted, line posts are 6" x 8" x 6'-0" wood with 6" x 12" x 1'-2" wood blocks. W6 x 8.5 or W6 x 9 steel posts, 6'-0" in length, with 6" x 12" x 1'-2" notched wood blocks or notched recycled plastic blocks may be used for 6" x 8" x 6'-0" wood line posts with 6" x 12" x 1'-2" wood blocks where applicable and when specified.
4. A 4'-0" minimum clearance is required between the face of the railing and the face of a fixed object located directly behind MGS sections with post spacing of 6'-3". Construct MGS as shown in the detail "Strengthened Midwest Guardrail System Sections for Fixed Object" on this plan, where the clearance between the face of the railing and the face of a fixed object is less than 4'-0", but not less than 3'-0". Where the clearance is less than 3'-0", a concrete wall or barrier should be constructed to shield the fixed object(s).
5. For End Anchor Assembly (Type SFT) details, see Revised Standard Plan RSP A77S1.
6. 31" in-line terminal system end treatments are used where site conditions will not accommodate a 31" flared end treatment.
7. The type of 31" terminal system to be used will be shown on the Project Plans.
8. The 15:1 or flatter flare used with Type 16C Layout is based on the edge of the paved shoulder or offset line of edge of the traveled way. The length of MGS within the 15:1 or flatter flare is based on site conditions and should be a length equal to multiples of 12'-6".
9. For details of the Buried Post End Anchor used with Type 16C Layout, see Revised Standard Plan RSP A77T2.
10. As site conditions dictate, construct additional MGS to shield fixed object(s). Additional MGS length equal to multiples of 12'-6". Post spacing at 6'-3" except as specified in Note 4.
11. Layout Types 16A, 16B or 16C are typically used where MGS is recommended to shield roadside fixed object(s) and a crashworthy 31" end treatment is required for only one direction of traffic.
12. Where placement of dike is required with MGS, see Revised Standard Plan RSP A77N4 for dike positioning details.
13. For typical flare offsets for 25'-0" length parabola with maximum offset of 1'-0", see Revised Standard Plan RSP A77P1.
14. W6 x 15 steel post, 8'-0" in length, with 8" x 12" x 1'-2" notched wood block or notched recycled plastic blocks may be used in place of the 10" x 10" x 8'-0" wood post with 8" x 12" x 1'-2" wood block shown in the detail "Strengthened Midwest Guardrail System Sections for Fixed Object".

STATE OF CALIFORNIA
DEPARTMENT OF TRANSPORTATION

MIDWEST GUARDRAIL SYSTEM TYPICAL LAYOUTS FOR ROADSIDE FIXED OBJECTS

NO SCALE

RSP A77R3 DATED JULY 19, 2013 SUPPLEMENTS THE STANDARD PLANS BOOK DATED 2010.

REVISED STANDARD PLAN RSP A77R3

6-20-13

Dist	COUNTY	ROUTE	POST MILES TOTAL PROJECT	SHEET No.	TOTAL SHEETS
10	SJ	99	0.0/5.7	88	116

Randell D. Hiatt
REGISTERED CIVIL ENGINEER

November 15, 2013
PLANS APPROVAL DATE

REGISTERED PROFESSIONAL ENGINEER
Randell D. Hiatt
No. C50200
Exp. 6-30-15
CIVIL
STATE OF CALIFORNIA

THE STATE OF CALIFORNIA OR ITS OFFICERS OR AGENTS SHALL NOT BE RESPONSIBLE FOR THE ACCURACY OR COMPLETENESS OF SCANNED COPIES OF THIS PLAN SHEET.

TO ACCOMPANY PLANS DATED 5-2-16

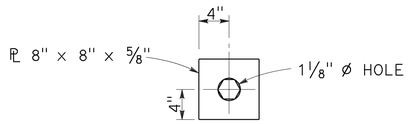

DETAIL "A"
CABLE CONNECTION
END PLATE

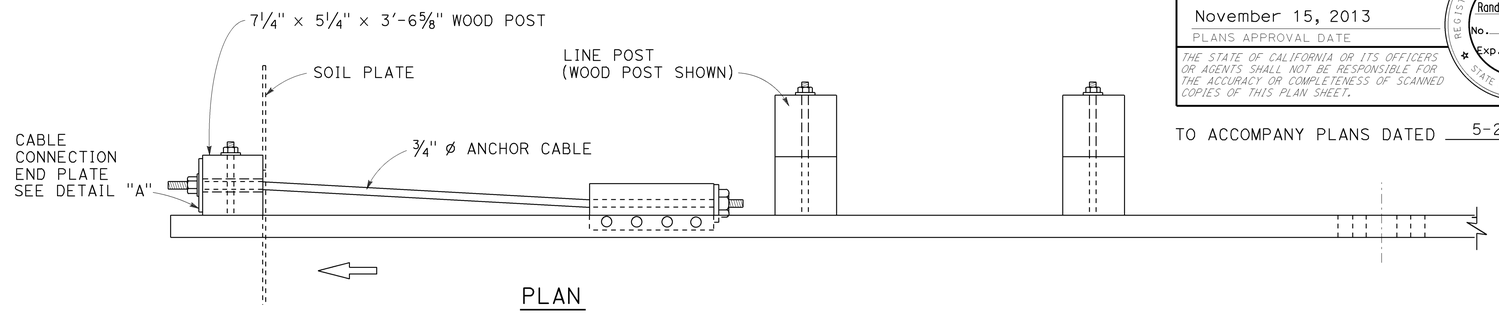

PLAN

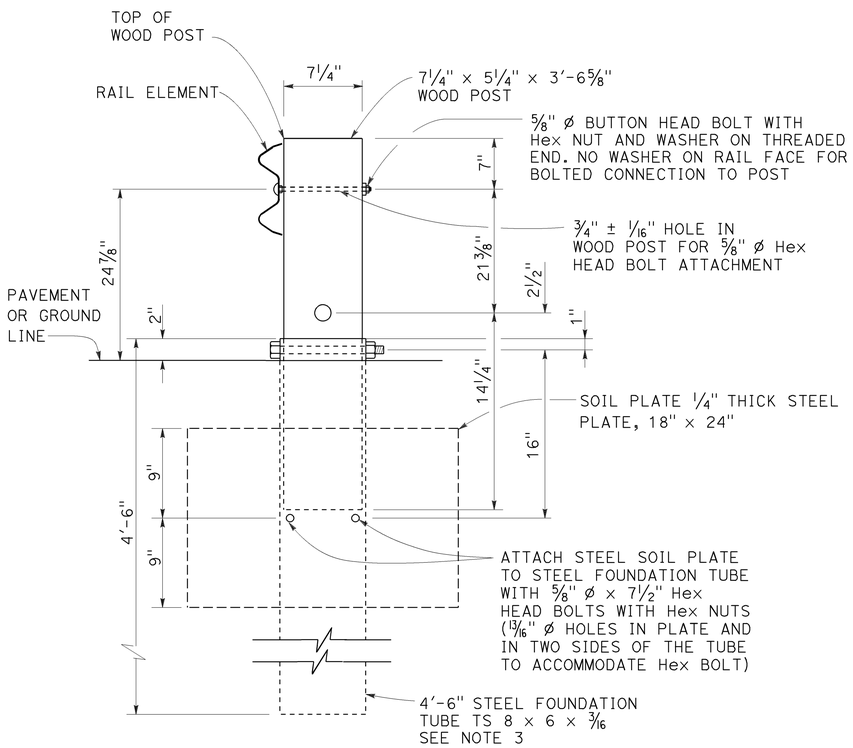

SECTION A-A

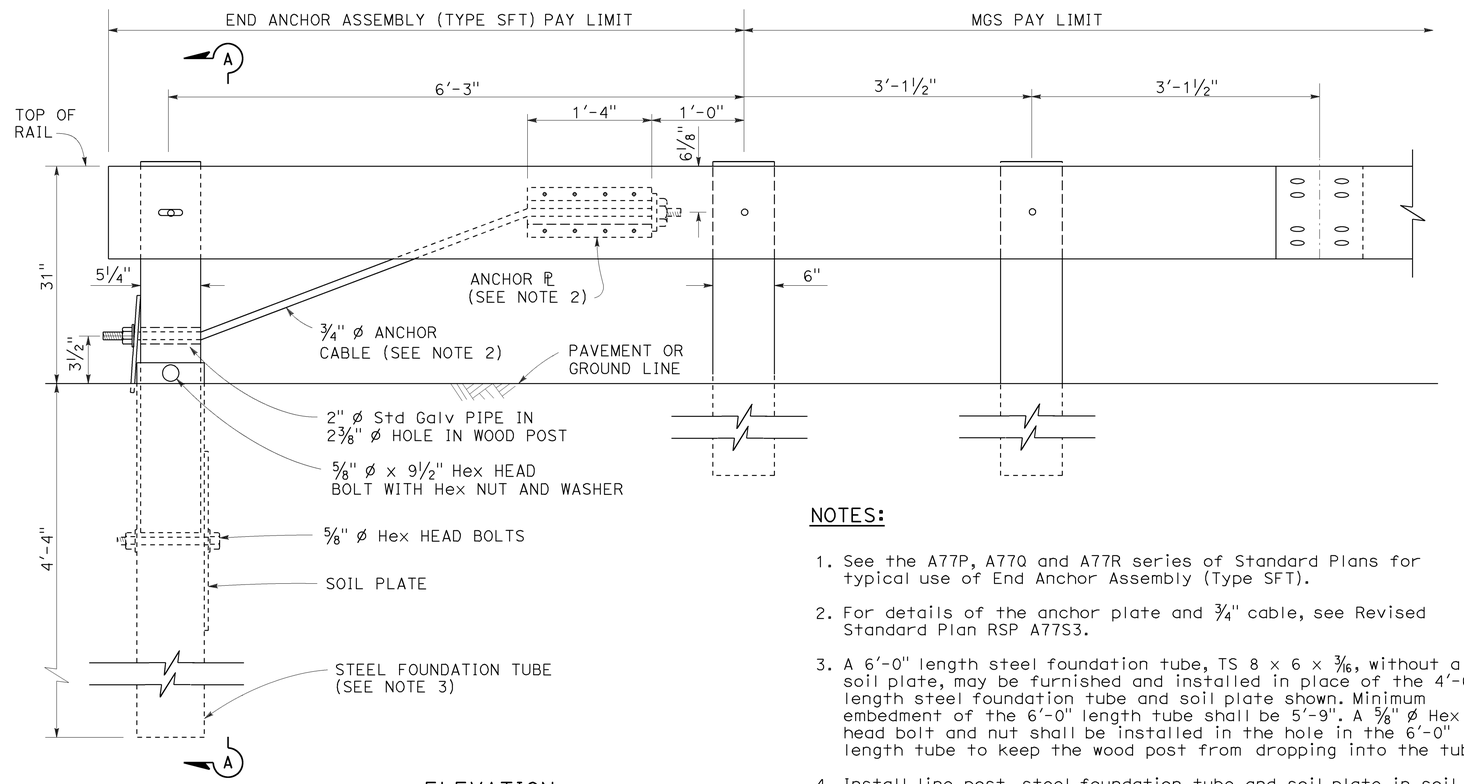

ELEVATION

END ANCHOR
ASSEMBLY (TYPE SFT)
See Note 1

NOTES:

1. See the A77P, A77Q and A77R series of Standard Plans for typical use of End Anchor Assembly (Type SFT).
2. For details of the anchor plate and 3/4" cable, see Revised Standard Plan RSP A77S3.
3. A 6'-0" length steel foundation tube, TS 8 x 6 x 3/16, without a soil plate, may be furnished and installed in place of the 4'-6" length steel foundation tube and soil plate shown. Minimum embedment of the 6'-0" length tube shall be 5'-9". A 5/8" ø Hex head bolt and nut shall be installed in the hole in the 6'-0" length tube to keep the wood post from dropping into the tube.
4. Install line post, steel foundation tube and soil plate in soil.

STATE OF CALIFORNIA
DEPARTMENT OF TRANSPORTATION

MIDWEST GUARDRAIL SYSTEM END ANCHOR ASSEMBLY (TYPE SFT)

NO SCALE

RSP A77S1 DATED NOVEMBER 15, 2013 SUPERSEDES RSP A77S1
DATED JULY 19, 2013 THAT SUPPLEMENTS THE STANDARD PLANS BOOK DATED 2010.

REVISED STANDARD PLAN RSP A77S1

2010 REVISED STANDARD PLAN RSP A77S1

10-4-13

Dist	COUNTY	ROUTE	POST MILES TOTAL PROJECT	SHEET No.	TOTAL SHEETS
10	SJ	99	0.0/5.7	89	116

Randell D. Hiatt
REGISTERED CIVIL ENGINEER

July 19, 2013
PLANS APPROVAL DATE

REGISTERED PROFESSIONAL ENGINEER
Randell D. Hiatt
No. C50200
Exp. 6-30-15
CIVIL
STATE OF CALIFORNIA

THE STATE OF CALIFORNIA OR ITS OFFICERS OR AGENTS SHALL NOT BE RESPONSIBLE FOR THE ACCURACY OR COMPLETENESS OF SCANNED COPIES OF THIS PLAN SHEET.

TO ACCOMPANY PLANS DATED 5-2-16

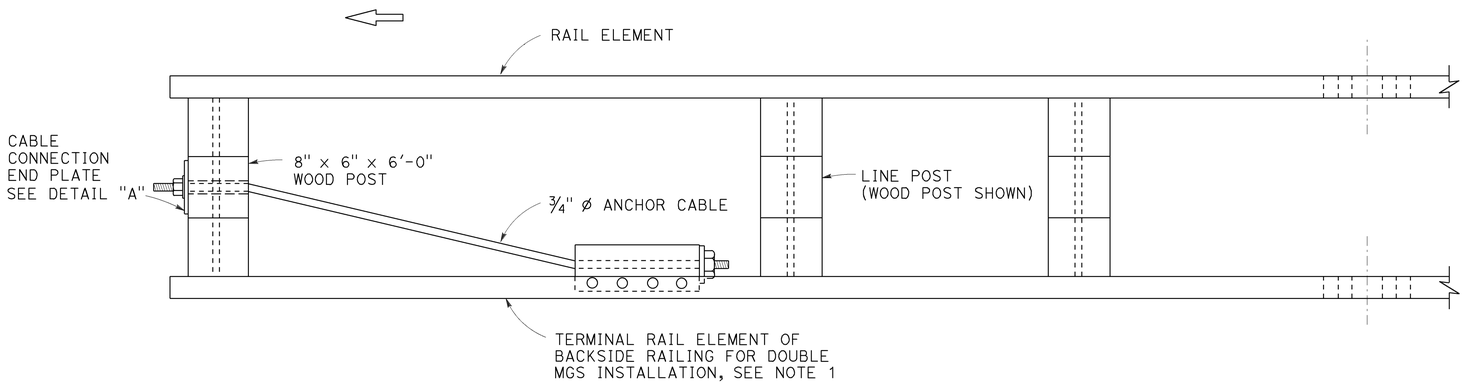

PLAN

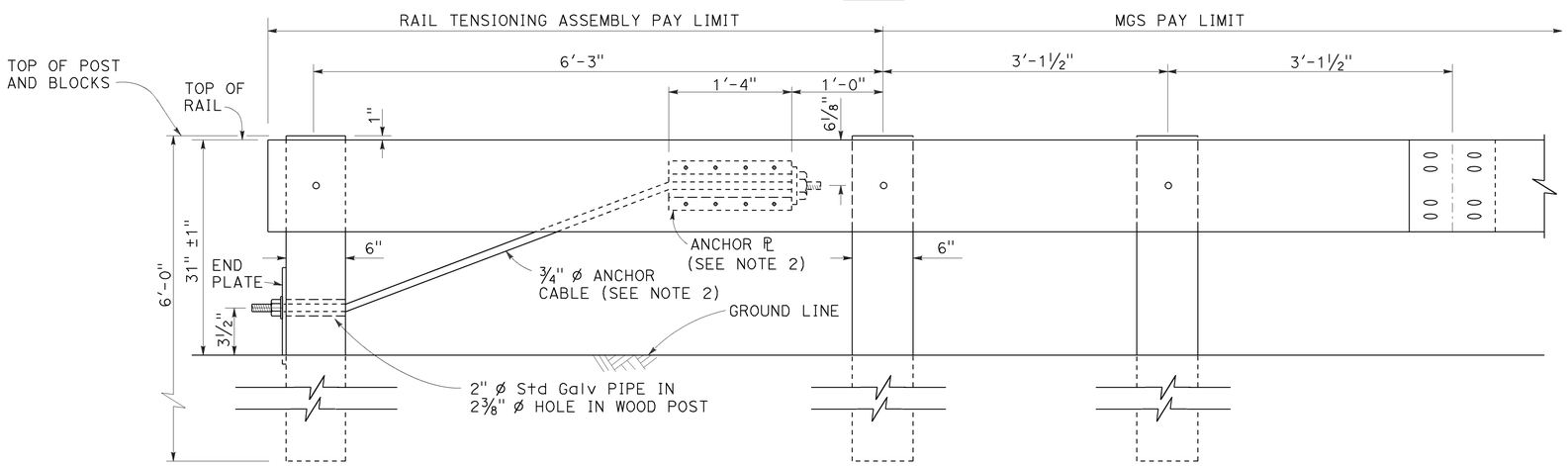

ELEVATION
RAIL TENSIONING ASSEMBLY
See Note 1

NOTES:

1. See Revised Standard Plans RSP A77O3 and RSP A77R1 for typical use of rail tensioning assembly.
2. For details of the anchor plate and ¾" cable, see Revised Standard Plan RSP A77S3.

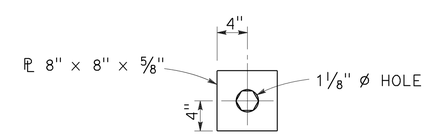

DETAIL "A"
CABLE CONNECTION END PLATE

STATE OF CALIFORNIA
DEPARTMENT OF TRANSPORTATION

MIDWEST GUARDRAIL SYSTEM
RAIL TENSIONING ASSEMBLY

NO SCALE

RSP A77S2 DATED JULY 19, 2013 SUPPLEMENTS THE STANDARD PLANS BOOK DATED 2010.

REVISED STANDARD PLAN RSP A77S2

2010 REVISED STANDARD PLAN RSP A77S2

7-3-13

Dist	COUNTY	ROUTE	POST MILES TOTAL PROJECT	SHEET No.	TOTAL SHEETS
10	SJ	99	0.0/5.7	90	116

Randell D. Hiatt
REGISTERED CIVIL ENGINEER

November 15, 2013
PLANS APPROVAL DATE

REGISTERED PROFESSIONAL ENGINEER
Randell D. Hiatt
No. C50200
Exp. 6-30-15
CIVIL
STATE OF CALIFORNIA

THE STATE OF CALIFORNIA OR ITS OFFICERS OR AGENTS SHALL NOT BE RESPONSIBLE FOR THE ACCURACY OR COMPLETENESS OF SCANNED COPIES OF THIS PLAN SHEET.

TO ACCOMPANY PLANS DATED 5-2-16

2010 REVISED STANDARD PLAN RSP A77S3

NOTE:

See Revised Standard Plans RSP A77S1, RSP A77S2 and RSP A77T1 for typical use of anchor cable and anchor plate.

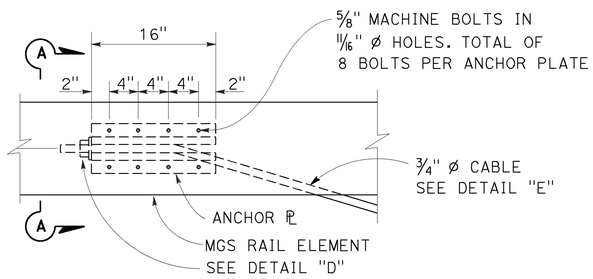

ANCHOR PLATE DETAIL
(MGS shown, TBB similar)

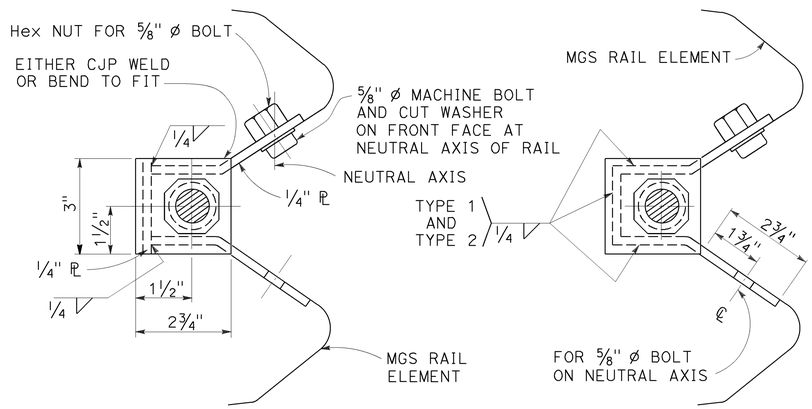

NOTE:
Dimensioning applies to both types.

SECTION A-A
(ALTERNATIVE TYPE 1)

SECTION A-A
(ALTERNATIVE TYPE 2)

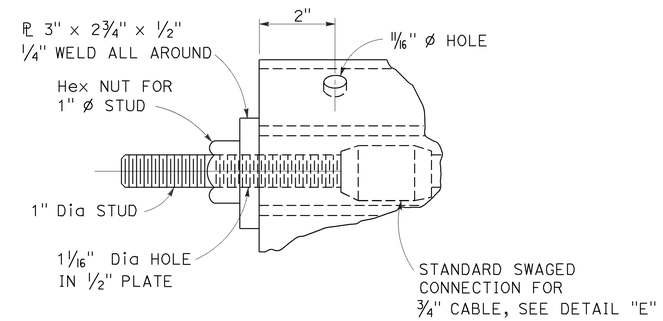

DETAIL "D"

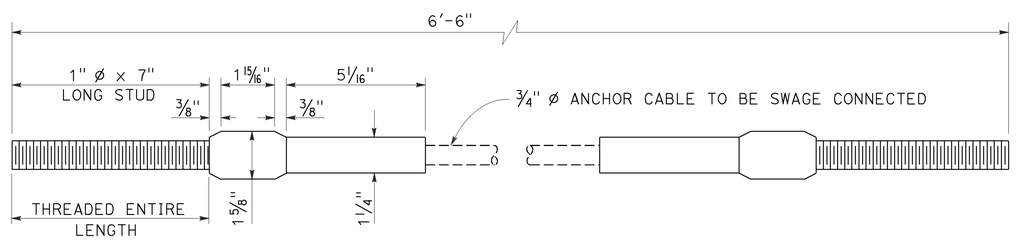

ANCHOR CABLE WITH
SWAGED FITTING AND STUD
DETAIL "E"

STATE OF CALIFORNIA
DEPARTMENT OF TRANSPORTATION

METAL RAILING ANCHOR CABLE AND ANCHOR PLATE DETAILS

NO SCALE

RSP A77S3 DATED NOVEMBER 15, 2013 SUPERSEDES RSP A77S3
DATED JULY 19, 2013 THAT SUPPLEMENTS THE STANDARD PLANS BOOK DATED 2010.

REVISED STANDARD PLAN RSP A77S3

10-4-13

Dist	COUNTY	ROUTE	POST MILES TOTAL PROJECT	SHEET No.	TOTAL SHEETS
10	SJ	99	0.0/5.7	91	116

Randell D. Hiatt
REGISTERED CIVIL ENGINEER

July 19, 2013
PLANS APPROVAL DATE

REGISTERED PROFESSIONAL ENGINEER
Randell D. Hiatt
No. C50200
Exp. 6-30-15
CIVIL
STATE OF CALIFORNIA

THE STATE OF CALIFORNIA OR ITS OFFICERS OR AGENTS SHALL NOT BE RESPONSIBLE FOR THE ACCURACY OR COMPLETENESS OF SCANNED COPIES OF THIS PLAN SHEET.

TO ACCOMPANY PLANS DATED 5-2-16

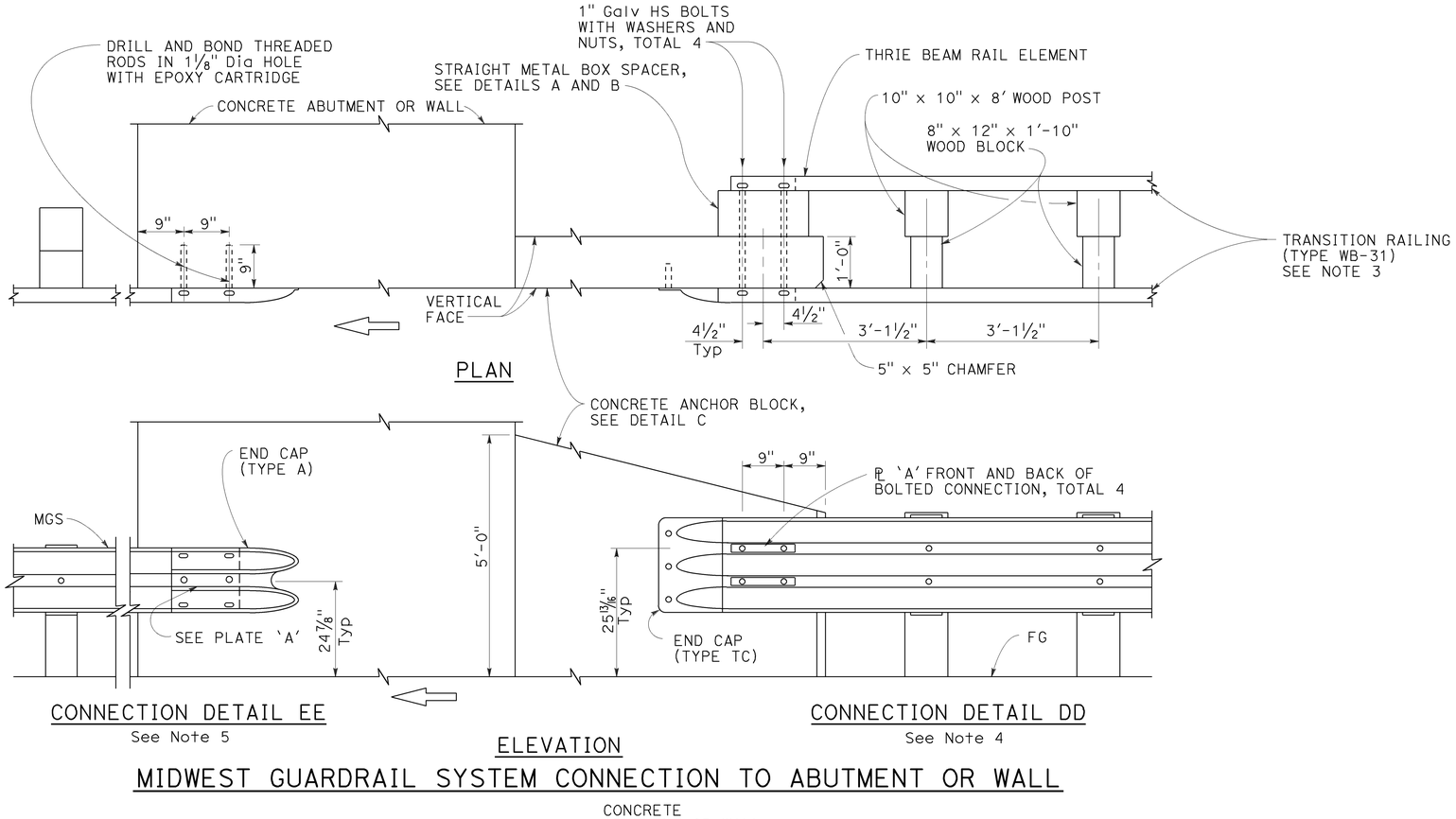

MIDWEST GUARDRAIL SYSTEM CONNECTION TO ABUTMENT OR WALL

NOTES:

1. These connection details apply to abutments and walls.
2. Additional details of posts, blocks and hardware are shown on Revised Standard Plans RSP A77M1, RSP A77N1 and RSP A77N2.
3. For additional details of Transition Railing (Type WB-31), see Revised Standard Plan RSP A77U4. Transition Railing (Type WB-31) transitions the 12 gauge MGS railing section to a heavier gage nested thrie beam railingsection which is connected to the concrete anchor block.
4. For typical use of Connection Details DD, see Layout Types 12A and 12B on Revised Standard Plan RSP A77Q1 and Layout Types 12C and 12D on Revised Standard Plan RSP A77Q2.
5. For typical use of Connection Detail EE, see Layout Type 12D on Revised Standard Plan RSP A77Q2 and Layout Type 12DD on Revised Standard Plan RSP A77Q5.

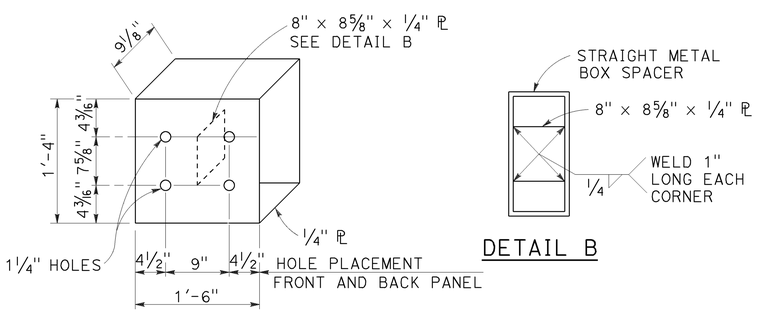

STRAIGHT METAL BOX SPACER

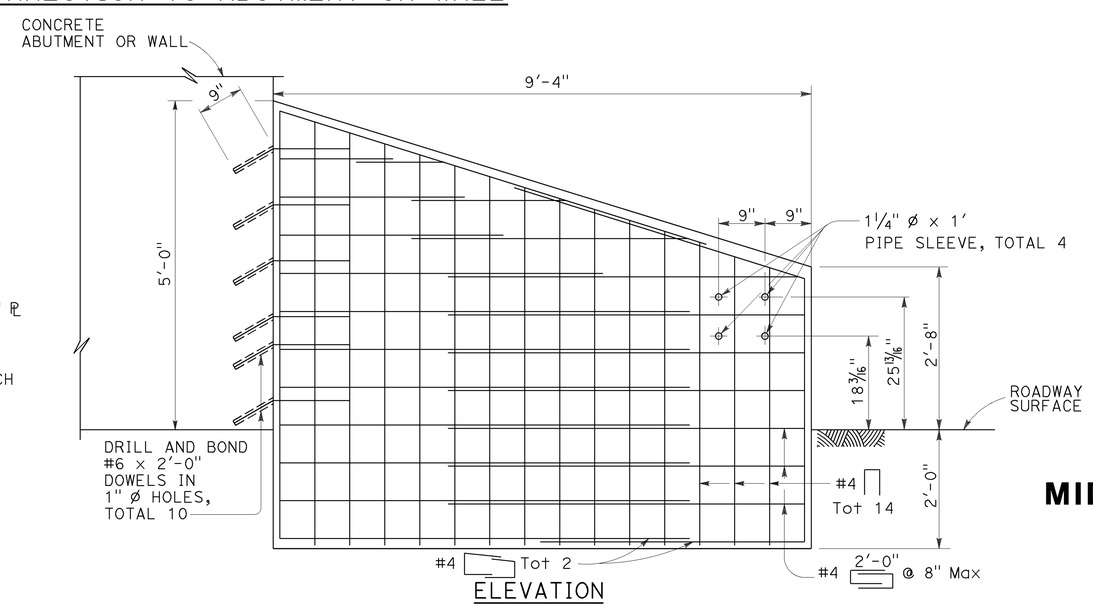

ELEVATION

ANCHOR BLOCK FOR TRANSITION RAILING CONNECTION

DETAIL C

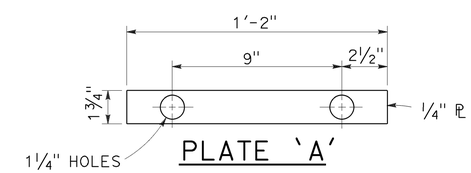

PLATE 'A'

STATE OF CALIFORNIA
DEPARTMENT OF TRANSPORTATION

MIDWEST GUARDRAIL SYSTEM CONNECTIONS TO ABUTMENTS AND WALLS

NO SCALE

RSP A77U3 DATED JULY 19, 2013 SUPPLEMENTS THE STANDARD PLANS BOOK DATED 2010.

REVISED STANDARD PLAN RSP A77U3

2010 REVISED STANDARD PLAN RSP A77U3

7-8-13

Dist	COUNTY	ROUTE	POST MILES TOTAL PROJECT	SHEET No.	TOTAL SHEETS
10	SJ	99	0.0/5.7	92	116

Randell D. Hiatt
REGISTERED CIVIL ENGINEER

January 23, 2015
PLANS APPROVAL DATE

REGISTERED PROFESSIONAL ENGINEER
Randell D. Hiatt
No. C50200
Exp. 6-30-15
CIVIL
STATE OF CALIFORNIA

THE STATE OF CALIFORNIA OR ITS OFFICERS OR AGENTS SHALL NOT BE RESPONSIBLE FOR THE ACCURACY OR COMPLETENESS OF SCANNED COPIES OF THIS PLAN SHEET.

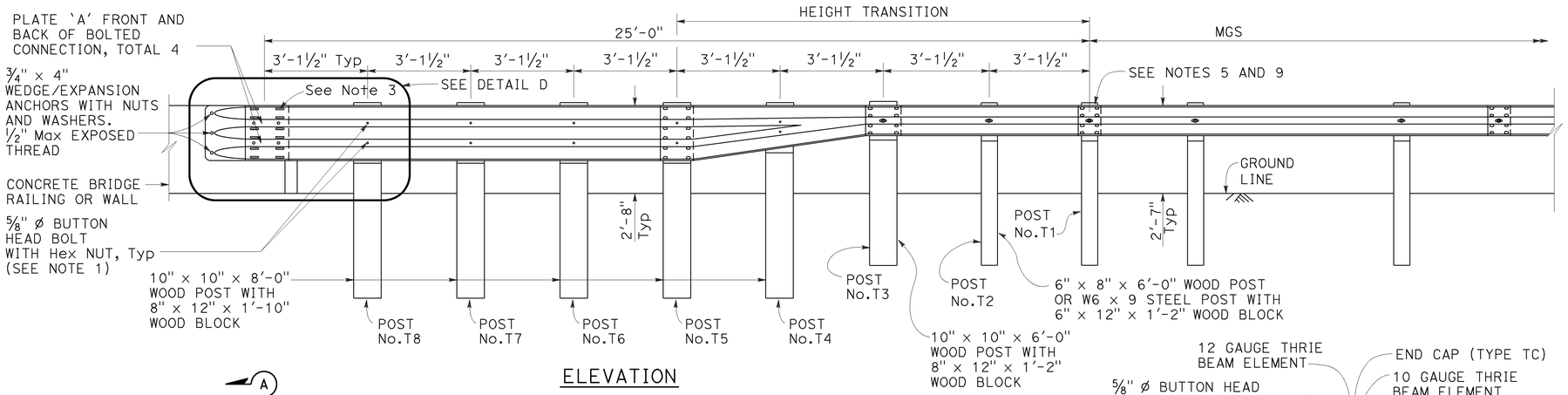

ELEVATION

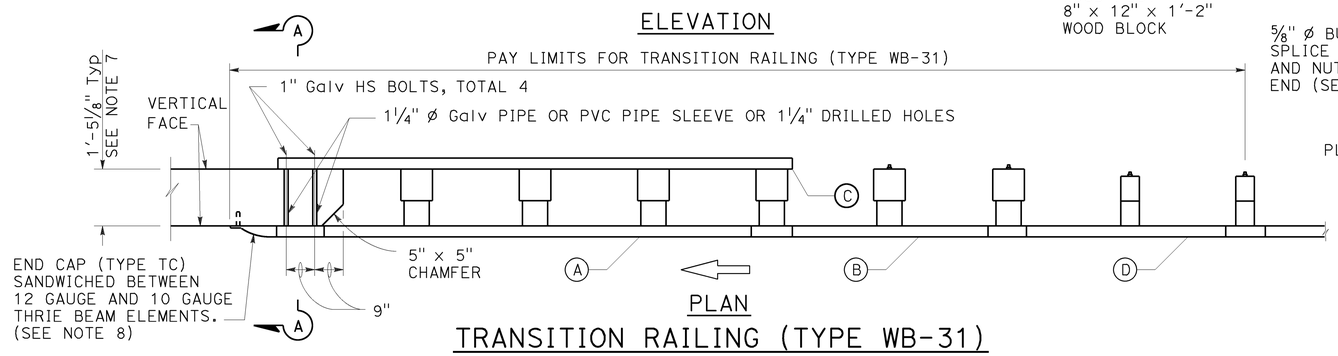

PLAN

TRANSITION RAILING (TYPE WB-31)

(No Blockout Attachment)

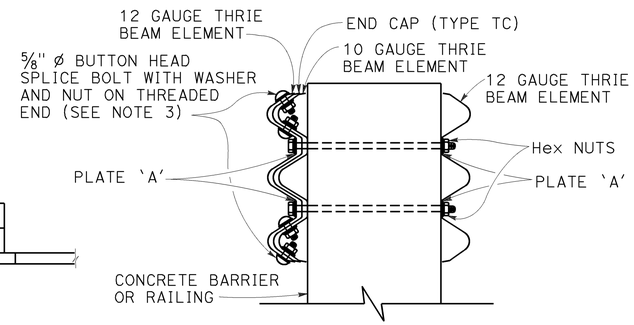

SECTION A-A

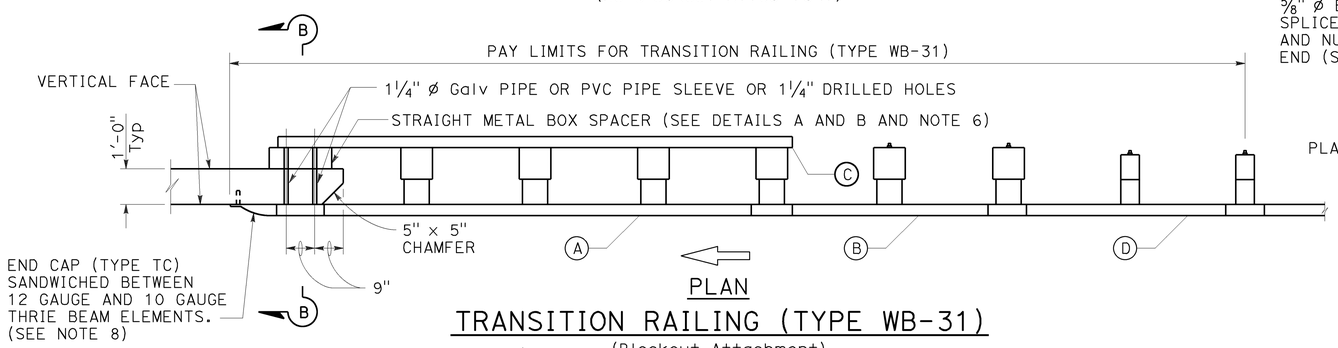

PLAN

TRANSITION RAILING (TYPE WB-31)

(Blockout Attachment)

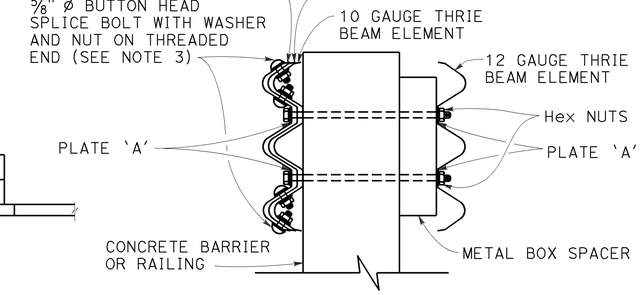

SECTION B-B

NOTES:

TO ACCOMPANY PLANS DATED 5-2-16

1. Use 5/8" ø Button head bolts and hex nuts for connections to posts. No washer on rail face for bolted connections to post.
2. The nested rail elements, end cap, and 'W' beam to thrie beam element may be spliced together prior to bolting the elements to the wood post and concrete barrier or railing.
3. Exterior splice bolt holes for rail element splices at Post No. T5 and the connection to the concrete barrier or railing shall be the standard 29/32" x 1 1/8" slot size. Interior splice bolt holes at these locations may be increased up to 1 1/4" ø. Only the top 4 and the bottom 4 splice bolts with washers and nuts are required for rail splices at Post No. T5 and the connection to the concrete barrier or railing.
4. The top elevation of Posts No. T2 through No. T7 shall not project more than 1" above the top elevation of the rail element.
5. Typically, the railing connected to Transition Railing (Type WB-31) will be either standard railing section of MGS with height transition ratio of 150:1 or a Caltrans approved 31" end treatment attached to Post No. T1.
6. The depth of the metal box spacer varies from the 9 1/8" to 1 1/2" and is dependent on the width of the concrete railing or wall. The combined dimension for the depth of the metal box spacer plus the width of railing or wall is typically 21 1/8". Where the space between the backside of the concrete railing or wall and the rear thrie beam element is less than 1 1/2", metal plates similar to Plate 'A' are to be used as spacers.
7. Where the width of the concrete railing or wall is greater than 17 1/8", wood blocks are to be used to fill the space created between the backside of Posts No. T5 through No. T8 and the rear thrie beam element. These wood blocks shall be 8" in width and 1'-2" in length. The dimension between the front thrie beam element and the rear thrie beam element is to match the width of the concrete railing or wall.
8. End cap may be installed over 12 gauge and 10 gauge thrie beam elements where transition railing is installed on the departure end of bridge railing.
9. Conform standard railing section height to 31" at Post No. T1 using height transition ratio of 150:1.

LEGEND:

(A) NESTED THRIE BEAM ELEMENTS (ONE 12 GAUGE ELEMENT NESTED OVER ONE 10 GAUGE ELEMENT).

(B) ONE ASYMMETRICAL 10 GAUGE "W" BEAM TO THRIE BEAM ELEMENT.

(C) ONE 12 GAUGE THRIE BEAM ELEMENT.

(D) ONE 10 GAUGE "W" BEAM RAIL ELEMENT (7'-3 1/2" LENGTH)

10 GAUGE = 0.138" THICK
12 GAUGE = 0.108" THICK

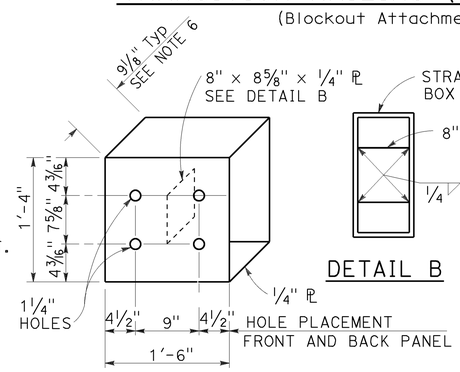

DETAIL A

STRAIGHT METAL BOX SPACER

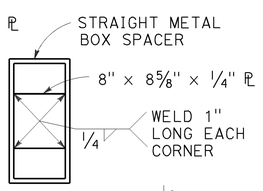

DETAIL B

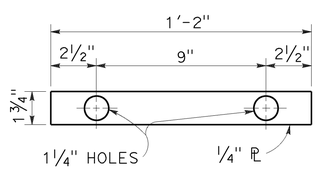

DETAIL C

PLATE 'A'

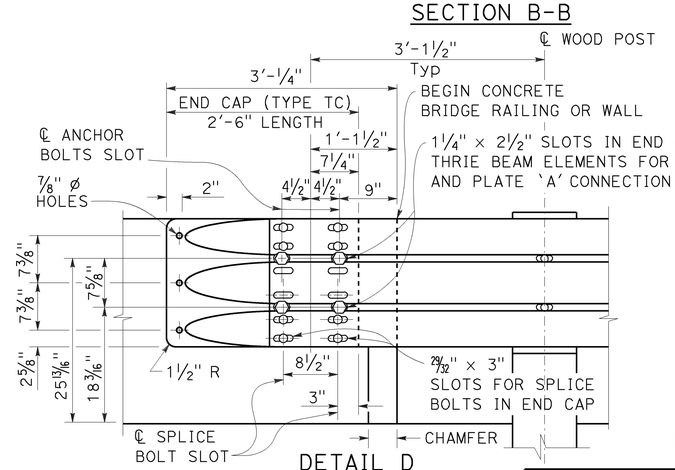

DETAIL D

STATE OF CALIFORNIA
DEPARTMENT OF TRANSPORTATION

MIDWEST GUARDRAIL SYSTEM TRANSITION RAILING (TYPE WB-31)

NO SCALE

RSP A77U4 DATED JANUARY 23, 2015 SUPERSEDES RSP A77U4 DATED NOVEMBER 15, 2013 AND RSP A77U4 DATED JULY 19, 2013 THAT SUPPLEMENTS THE STANDARD PLANS BOOK DATED 2010.

REVISED STANDARD PLAN RSP A77U4

2010 REVISED STANDARD PLAN RSP A77U4

1-8-15

Dist	COUNTY	ROUTE	POST MILES TOTAL PROJECT	SHEET No.	TOTAL SHEETS
10	SJ	99	0.0/5.7	93	116

REGISTERED CIVIL ENGINEER

July 19, 2013
PLANS APPROVAL DATE

REGISTERED PROFESSIONAL ENGINEER
Michael Janzen
No. 44788
Exp. 03-31-14
CIVIL
STATE OF CALIFORNIA

THE STATE OF CALIFORNIA OR ITS OFFICERS OR AGENTS SHALL NOT BE RESPONSIBLE FOR THE ACCURACY OR COMPLETENESS OF SCANNED COPIES OF THIS PLAN SHEET.

TO ACCOMPANY PLANS DATED 5-2-16

2010 REVISED STANDARD PLAN RSP A87A

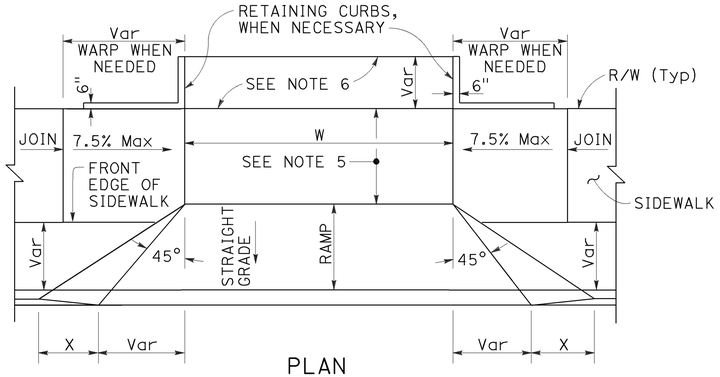

PLAN

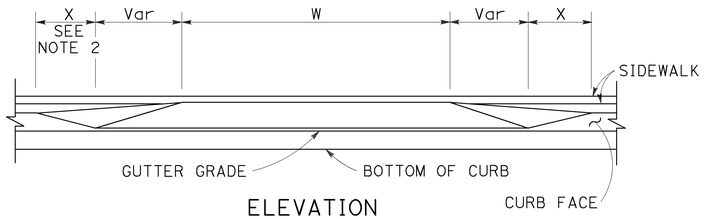

ELEVATION

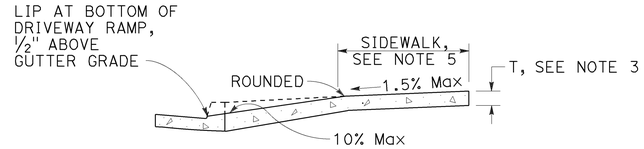

CASE A

Typical driveway, sidewalk not depressed

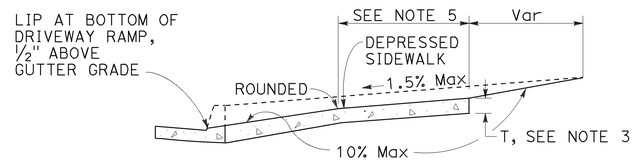

CASE B

Driveway with depressed sidewalk

SECTIONS

DRIVEWAYS

TABLE A

CURB TYPE	DIMENSIONS			
	"H1"	"H2"	"W1"	"W2"
A1-6	1'-2"	6"	7½"	1½"
A1-8	1'-4"	8"	8"	2"
A2-6	1'-0"	6"	2'-7½"	1½"
A2-8	1'-2"	8"	2'-8"	2"
A3-6	6"	5"	7¼"	1¼"
A3-8	8"	7"	7¾"	1¾"
B1-4	1'-0"	4"	7½"	2½"
B1-6	1'-2"	6"	9"	4"
B2-4	10"	4"	2'-7½"	2½"
B2-6	1'-0"	6"	2'-9"	4"
B3-4	4"	3"	7"	2"
B3-6	6"	5"	8½"	3½"
D-4	10"	4"	1'-6"	1'-1"
D-6	1'-0"	6"	2'-2"	1'-9"

CURB QUANTITIES

TYPE	CUBIC YARDS PER LINEAR FOOT
A1-6	0.02585
A1-8	0.03084
A2-6	0.05903
A2-8	0.06379
A3-6	0.01036
A3-8	0.01435
B1-4	0.02185
B1-6	0.02930
B2-4	0.05515
B2-6	0.06171
B3-4	0.00641
B3-6	0.01074
B4	0.05709
D-4	0.04083
D-6	0.06804
E	0.06661

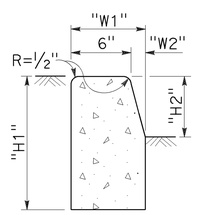

TYPE A1 CURBS

See Table A

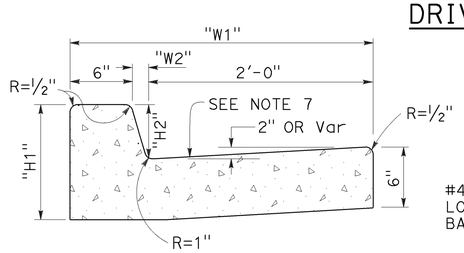

TYPE A2 CURBS

See Table A

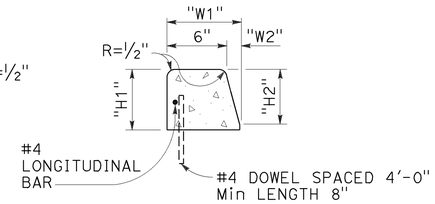

TYPE A3 CURBS

Superimposed on existing pavement
See Table A

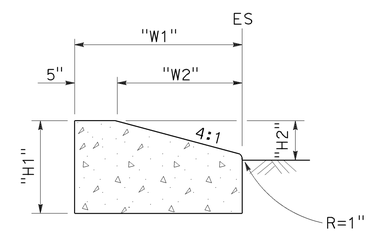

TYPE D CURBS

See Table A

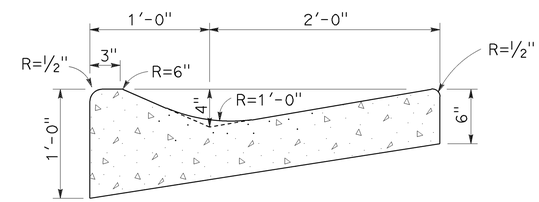

TYPE E CURB

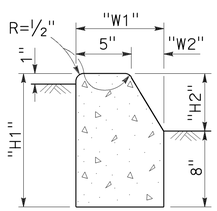

TYPE B1 CURBS

See Table A

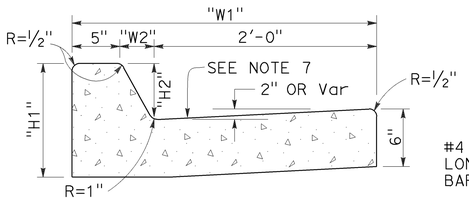

TYPE B2 CURBS

See Table A

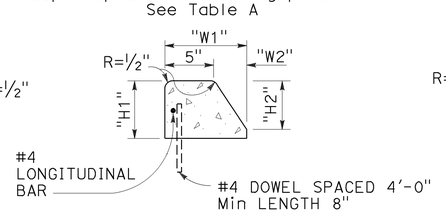

TYPE B3 CURBS

Superimposed on existing pavement
See Table A

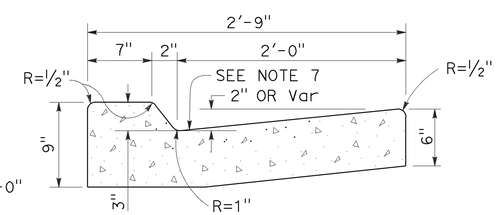

TYPE B4 CURBS

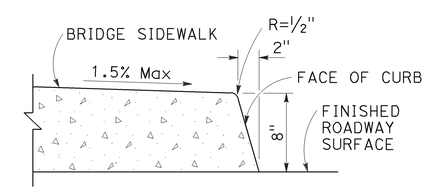

TYPE H CURB

On Bridges

CURBS

NOTES:

1. Case A driveway section typically applies.
2. X=3'-0" except for curb heights over 10" where 4:1 slopes shall be used on curb slope.
3. Sidewalk and ramp thickness "T" at driveway shall be 4" for residental and 6" for commercial.
4. Difference in slope of the driveway ramp and the slope of a line between the gutter and a point on the roadway 5'-0" from gutter line shall not exceed 15%. Reduce driveway ramp slope, not gutter slope, where required.
5. Minimum width of clear passageway for sidewalk shall be 4'-2".
6. Retaining curbs and acquisition of construction easement may be necessary for narrow sidewalks or curb heights in excess of 6".
7. Across the pedestrian route at curb ramp locations, the gutter pan slope shall not exceed 1" of depth for each 2'-0" of width.

STATE OF CALIFORNIA
DEPARTMENT OF TRANSPORTATION

CURBS AND DRIVEWAYS

NO SCALE

RSP A87A DATED JULY 19, 2013 SUPERSEDES STANDARD PLAN A87A
DATED MAY 20, 2011 - PAGE 119 OF THE STANDARD PLANS BOOK DATED 2010.

REVISED STANDARD PLAN RSP A87A

7-8-13

Dist	COUNTY	ROUTE	POST MILES TOTAL PROJECT	SHEET No.	TOTAL SHEETS
10	SJ	99	0.0/5.7	94	116

REGISTERED CIVIL ENGINEER

January 15, 2016
PLANS APPROVAL DATE

REGISTERED PROFESSIONAL ENGINEER
Michael Janzen
No. 44788
Exp. 3-31-16
CIVIL
STATE OF CALIFORNIA

THE STATE OF CALIFORNIA OR ITS OFFICERS OR AGENTS SHALL NOT BE RESPONSIBLE FOR THE ACCURACY OR COMPLETENESS OF SCANNED COPIES OF THIS PLAN SHEET.

TO ACCOMPANY PLANS DATED 5-2-16

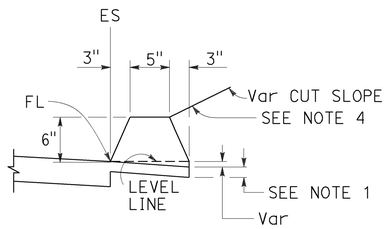

TYPE A
See Notes 3 and 5

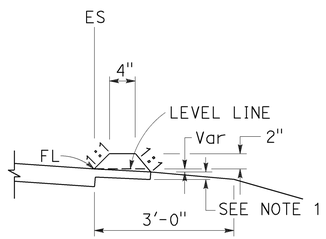

TYPE C

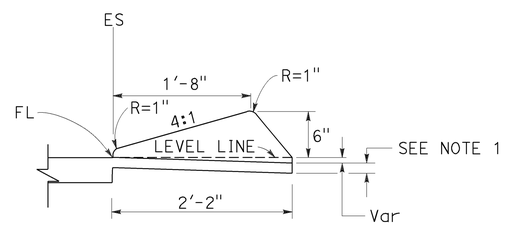

TYPE D

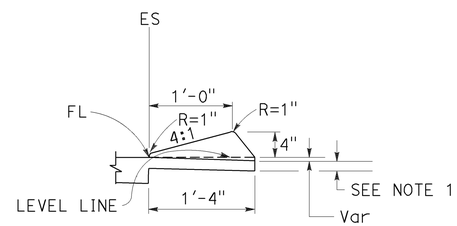

TYPE E

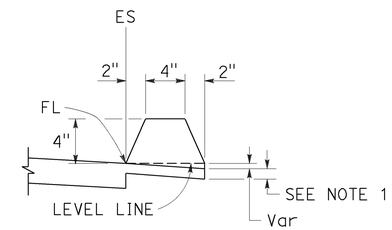

TYPE F
See Note 5

DIKES

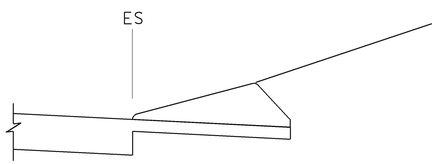

CASE C-1
Cut Slope

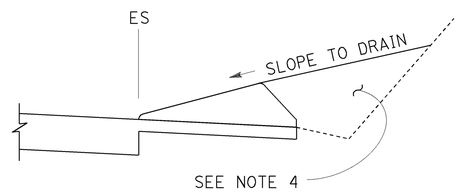

CASE C-2
Cut Slope

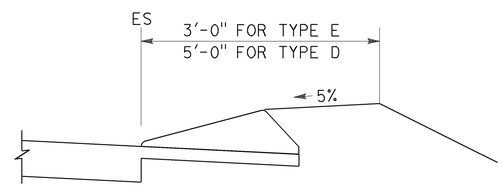

CASE F

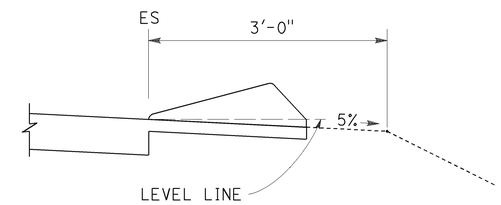

CASE R
See Note 2

TYPE D AND E BACKFILL DETAILS

NOTES:

1. For HMA shoulders only, extend top layer of HMA placed on the shoulder under dike with no joint at the ES. For projects with OGFC shoulders, do not extend OGFC under dike. See project plans for modified dike detail.
2. Case R applies to retrofit only projects where restrictive conditions do not provide enough width for Case F backfill.
3. Type A dike only to be used where restrictive slope conditions do not provide enough width to use Type D or Type E dike.
4. Fill and compact with excavated material to top of dike.
5. Use Type A or F dike, where dike is required with guardrail installations. See Standard Plan A77N4 for dike positioning details. See Standard Plan A77N3 for hinge point offsets with guardrail.

DIKE QUANTITIES

TYPE	CUBIC YARDS PER LINEAR FOOT
A	0.0135
C	0.0038
D	0.0293
E	0.0130
F	0.0066

Quantities based on 5% cross slope.

STATE OF CALIFORNIA
DEPARTMENT OF TRANSPORTATION

HOT MIX ASPHALT DIKES

NO SCALE

RSP A87B DATED JANUARY 15, 2016 SUPERSEDES STANDARD PLAN A87B DATED OCTOBER 30, 2015 - PAGE 126 OF THE STANDARD PLANS BOOK DATED 2015.

REVISED STANDARD PLAN RSP A87B

2015 REVISED STANDARD PLAN RSP A87B

11-17-15

Dist	COUNTY	ROUTE	POST MILES TOTAL PROJECT	SHEET No.	TOTAL SHEETS
10	SJ	99	0.0/5.7	95	116

REGISTERED CIVIL ENGINEER

July 15, 2016
PLANS APPROVAL DATE

REGISTERED PROFESSIONAL ENGINEER Hector David Cordova No. C41957 Exp. 3-31-18 CIVIL STATE OF CALIFORNIA

THE STATE OF CALIFORNIA OR ITS OFFICERS OR AGENTS SHALL NOT BE RESPONSIBLE FOR THE ACCURACY OR COMPLETENESS OF SCANNED COPIES OF THIS PLAN SHEET.

TO ACCOMPANY PLANS DATED 5-2-16

2015 REVISED STANDARD PLAN RSP A88A

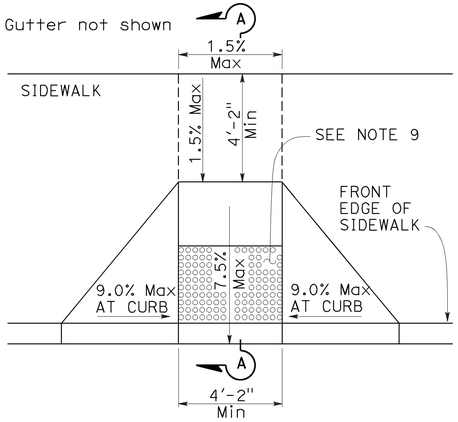

CASE A

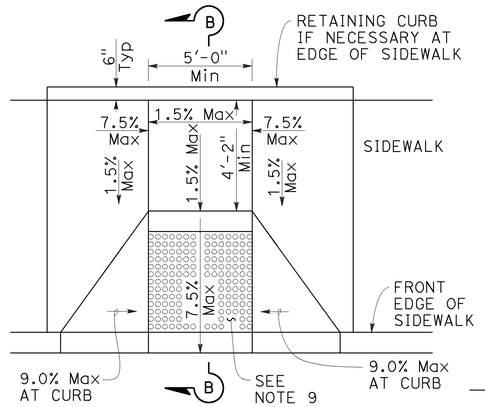

CASE B

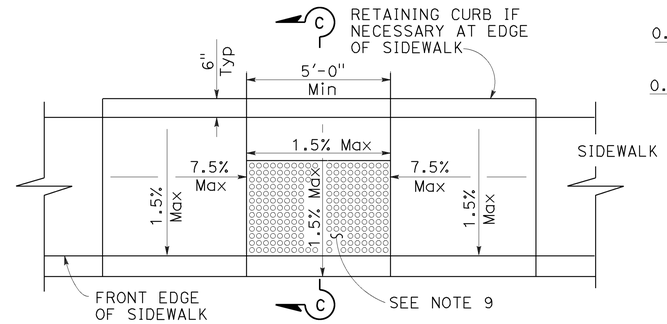

CASE C

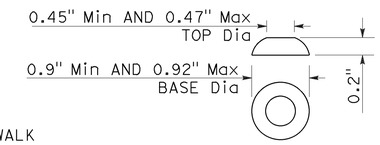

RAISED TRUNCATED DOME

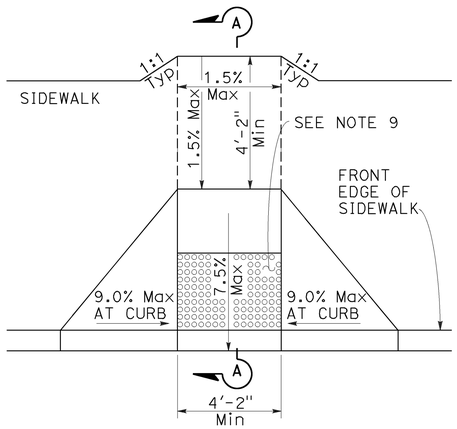

CASE D

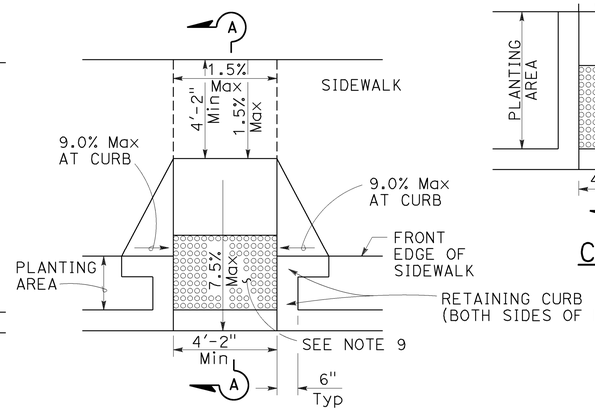

CASE E

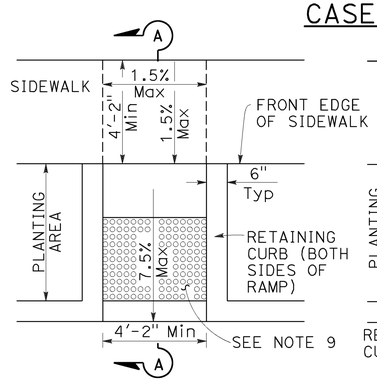

CASE F

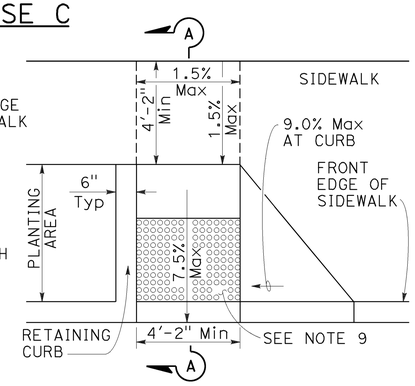

CASE G
See Note 4

SECTION A-A

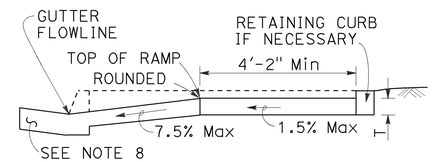

SECTION B-B
Depress entire sidewalk as required

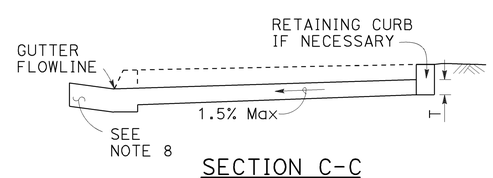

SECTION C-C

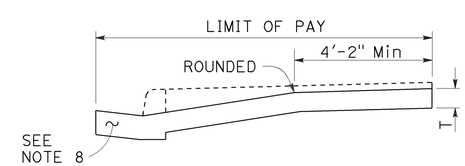

RETROFIT PAY LIMITS
Existing curb and sidewalk

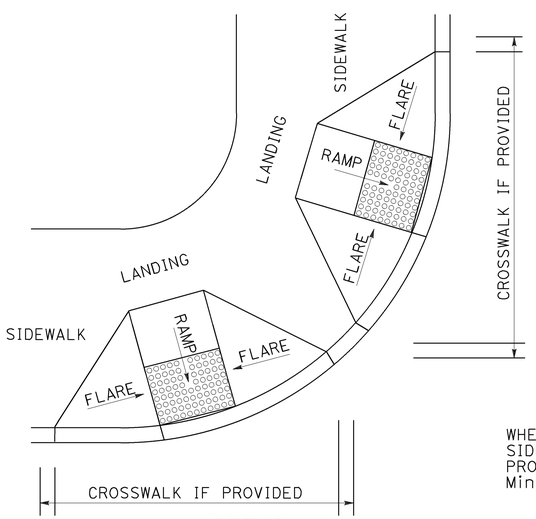

DETAIL A
TYPICAL TWO-RAMP CORNER INSTALLATION
See Note 1

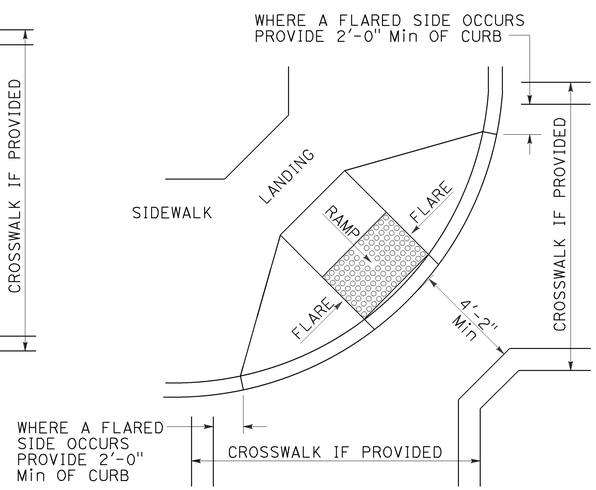

DETAIL B
TYPICAL ONE-RAMP CORNER INSTALLATION
See Notes 1 and 3

NOTES:

1. As site conditions dictate, Case A through Case G curb ramps may be used for corner installations similar to those shown in Detail A and Detail B. The case of curb ramps used in Detail A do not have to be the same. Case A through Case G curb ramps also may be used at mid block locations, as site conditions dictate.
2. If distance from curb to back of sidewalk is too short to accommodate ramp and 4'-2" platform (landing) as shown in Case A, the sidewalk may be depressed longitudinally as in Case B or C or may be widened as in Case D.
3. When ramp is located in center of curb return, crosswalk configuration must be similar to that shown for Detail B.
4. As site conditions dictate, the retaining curb side and the flared side of the Case G ramp shall be constructed in reversed position.
5. If located on a curve, the sides of the ramp need not be parallel, but the minimum width of the ramp shall be 4'-2".
6. Side slope of ramp flares vary uniformly from a maximum of 9.0% at curb to conform with longitudinal sidewalk slope adjacent to top of the ramp, except in Case C and Case F.
7. The adjacent surfaces at transitions at curb ramps to walks, gutters, and streets shall be at the same level.
8. Counter slopes of adjoining gutters and road surfaces immediately adjacent to and within 24 inches of the curb ramp shall not be steeper than 1V:20H (5.0%). Gutter pan slope shall not exceed 1" of depth for each 2'-0" of width.
9. Curb ramps shall have a detectable warning surface that extends the full width and 3'-0" depth of the ramp. A 4'-0" wide detectable warning surface may be used on a 4'-2" wide curb ramp. Detectable Warning Surfaces shall conform to the requirements in the Standard Specifications.
10. Sidewalk and ramp thickness, "T", shall be 3½" minimum.
11. Utility pull boxes, manholes, vaults and all other utility facilities within the boundaries of the curb ramp will be relocated or adjusted to grade by the owner prior to, or in conjunction with, curb ramp construction.
12. Detectable warning surface may have to be cut to allow removal of utility covers while maintaining full detectable warning width and depth.

RAISED TRUNCATED DOME PATTERN (IN-LINE)
DETECTABLE WARNING SURFACE
See Note 9

STATE OF CALIFORNIA
DEPARTMENT OF TRANSPORTATION

CURB RAMP DETAILS

NO SCALE

RSP A88A DATED JULY 15, 2016 SUPERSEDES STANDARD PLAN A88A
DATED OCTOBER 30, 2015 - PAGE 127 OF THE STANDARD PLANS BOOK DATED 2015.

REVISED STANDARD PLAN RSP A88A

3-30-16

Dist	COUNTY	ROUTE	POST MILES TOTAL PROJECT	SHEET No.	TOTAL SHEETS
10	SJ	99	0.0/5.7	96	116

REGISTERED CIVIL ENGINEER

October 30, 2015
PLANS APPROVAL DATE

REGISTERED PROFESSIONAL ENGINEER Srikanth N. Balasubramanian No. C56426 Exp. 6-30-17 CIVIL STATE OF CALIFORNIA

THE STATE OF CALIFORNIA OR ITS OFFICERS OR AGENTS SHALL NOT BE RESPONSIBLE FOR THE ACCURACY OR COMPLETENESS OF SCANNED COPIES OF THIS PLAN SHEET.

TO ACCOMPANY PLANS DATED 5-2-16

ABBREVIATIONS:

TE TAPERED EDGE

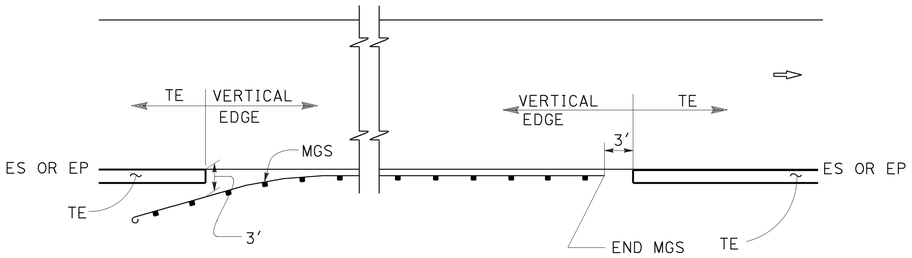

MGS

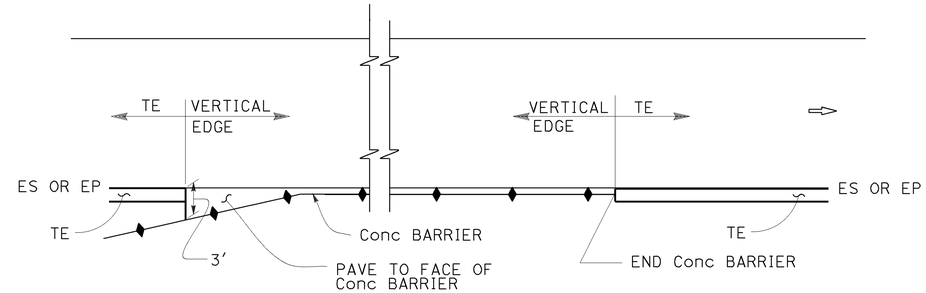

CONCRETE BARRIER

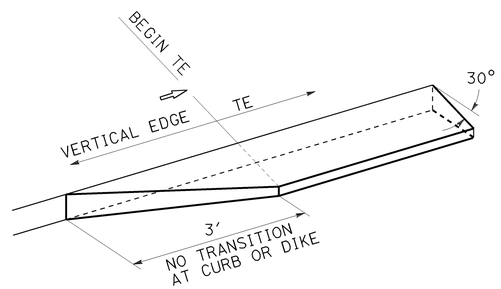

TRANSITION DETAIL FOR CONCRETE ONLY

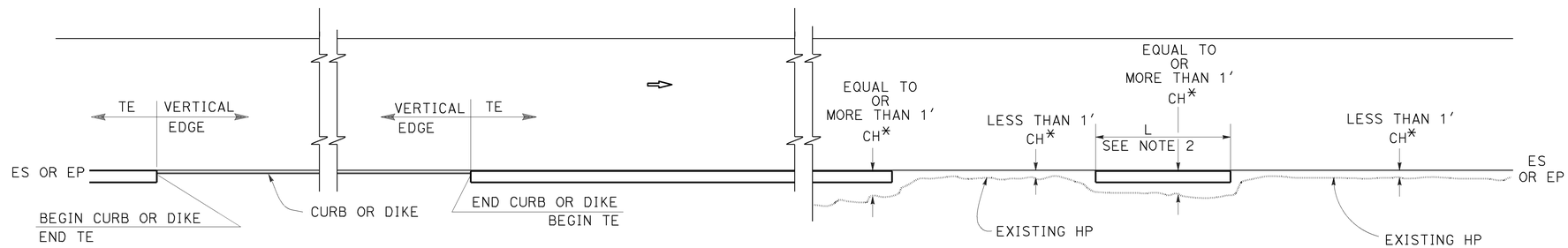

CURB OR DIKE

NARROW SIDE SLOPE

* CH = Distance from ES or EP to existing HP.

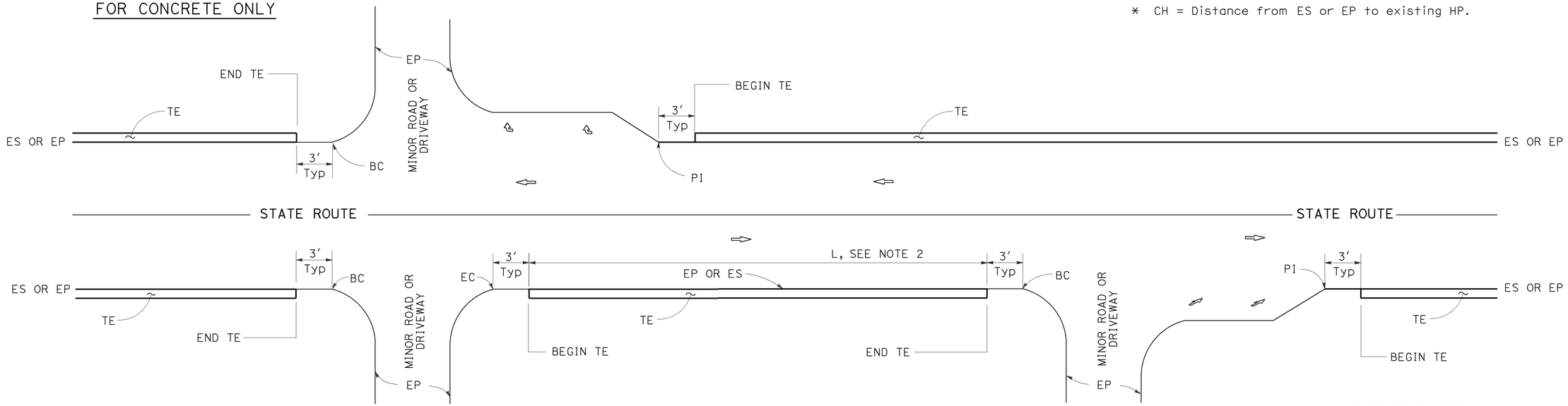

INTERTECTION

DRIVEWAY AND INTERSECTION

MINOR ROADWAY OR DRIVEWAY

STATE OF CALIFORNIA
DEPARTMENT OF TRANSPORTATION

PAVEMENT EDGE TREATMENTS

NO SCALE

NOTES:

1. For details not shown, see Revised Standard Plans RSP P75 and RSP P76.
2. Tapered edge is optional when L is less than 30′.

RSP P74 DATED OCTOBER 30, 2015 SUPERSEDES RSP P74 DATED NOVEMBER 15, 2013 AND RSP P74 DATED JANUARY 20, 2012 THAT SUPPLEMENTS THE STANDARD PLANS BOOK DATED 2010.

REVISED STANDARD PLAN RSP P74

2010 REVISED STANDARD PLAN RSP P74

10-13-15

Dist	COUNTY	ROUTE	POST MILES TOTAL PROJECT	SHEET No.	TOTAL SHEETS
10	SJ	99	0.0/5.7	97	116

REGISTERED CIVIL ENGINEER

October 30, 2015
PLANS APPROVAL DATE

REGISTERED PROFESSIONAL ENGINEER Srikanth N. Balasubramanian No. C56426 Exp. 6-30-17 CIVIL STATE OF CALIFORNIA

THE STATE OF CALIFORNIA OR ITS OFFICERS OR AGENTS SHALL NOT BE RESPONSIBLE FOR THE ACCURACY OR COMPLETENESS OF SCANNED COPIES OF THIS PLAN SHEET.

TO ACCOMPANY PLANS DATED 5-2-16

2010 REVISED STANDARD PLAN RSP P75

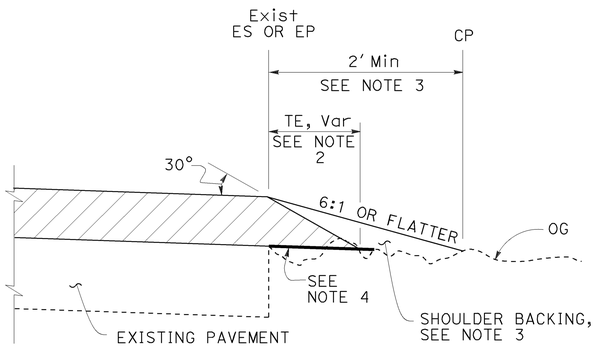

CASE A
Tapered Edge

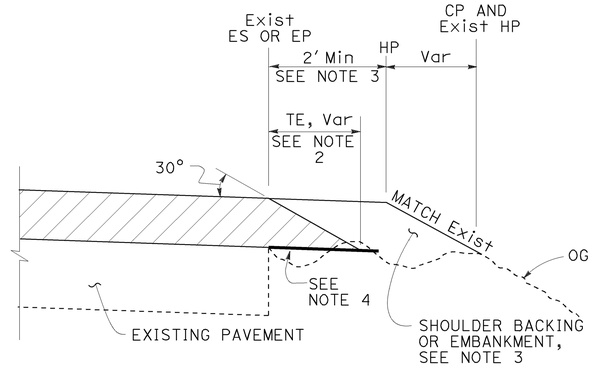

CASE B
Tapered Edge

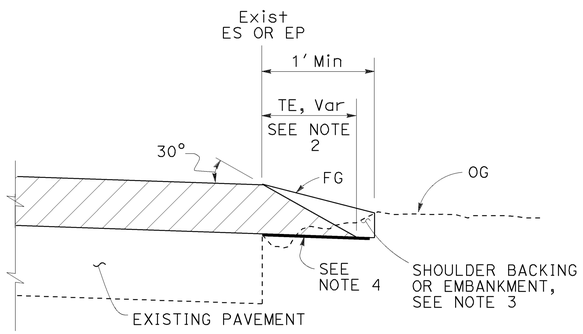

CASE C
Tapered Edge

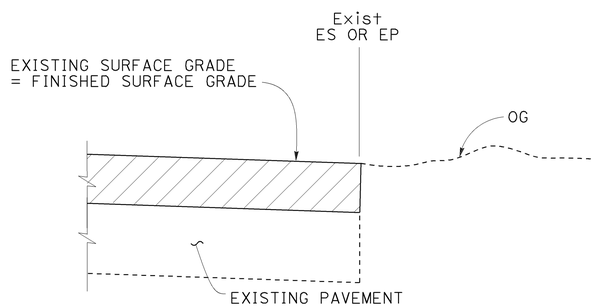

CASE D
Vertical Edge

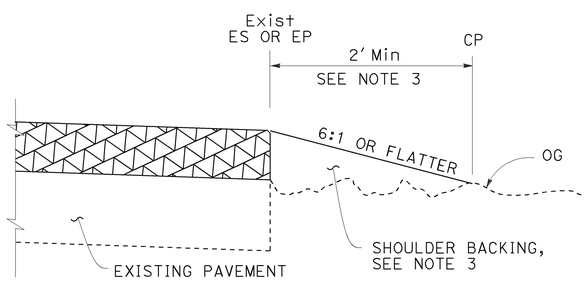

CASE E
Vertical Edge

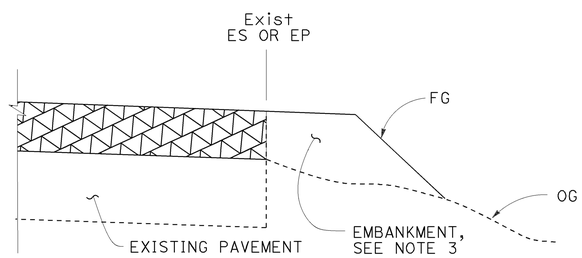

CASE F
Vertical Edge
* See Table A and Revised Std Plan RSP P74

LEGEND:

- HMA OVERLAY
- HMA OR CONCRETE OVERLAY
- CONCRETE OVERLAY

ABBREVIATIONS:

TE TAPERED EDGE
TT TOTAL THICKNESS OF TE

TABLE A
EDGE TREATMENT FOR VARIOUS OVERLAY THICKNESS AND CONDITIONS

	OVERLAY THICKNESS	
FIELD CONDITION	LESS THAN 0.15'	0.15' OR MORE
Exist SLOPE 6:1 OR FLATTER	CASE E	CASE A
Exist SLOPE 3:1 TO 6:1	CASE E	CASE B
Exist SLOPE STEEPER THAN 3:1	CASE F	CASE F
CUT SECTION (REPLACE, COLD PLANE, MILL PAVEMENT)	CASE D	CASE C

ADDITIONAL HMA OR CONCRETE QUANTITIES FOR TE/SIDE/MILE

TYPICAL CROSS SECTION	TT	TOTAL ADDITIONAL MATERIAL FOR TE/SIDE/MILE		
		HMA (TON)	CONCRETE (CY)*	CONCRETE (CY)**
TT	0.15'	7.7	NA	NA
	0.20'	13.7	NA	NA
	0.30'	30.9	NA	NA
	0.40'	54.9	NA	NA
	0.45'	69.4	NA	NA
TT 0.43'	0.50'	84.2	NA	NA
	0.60'	113.9	NA	NA
	0.70'	143.6	70.9	94.2
	0.80'	173.3	85.6	112.2
	0.90'	203.0	100.3	130.2
	1.00'	232.7	114.9	148.2
	1.10'	262.4	129.6	166.2
	1.20'	292.1	144.3	184.2

* For Detail "A"
** For Optional Detail "A"

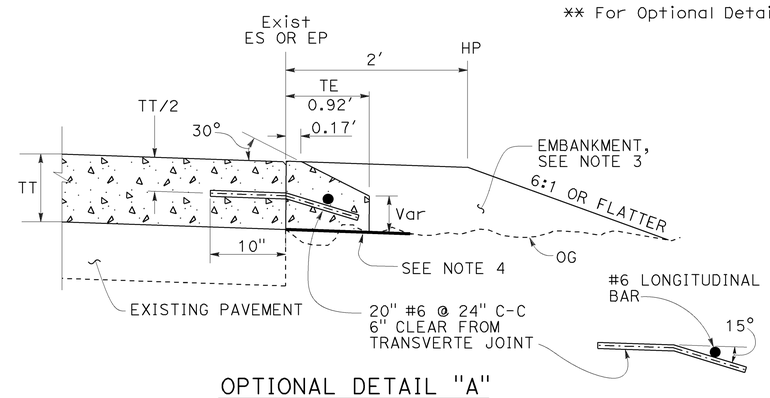

OPTIONAL DETAIL "A"
For concrete overlay
See Note 5

NOTES:

1. For limits of tapered edge and vertical edge treatments, see Revised Standard Plan RSP P74.
2. Details shown for HMA overlay thickness less than 0.43'. See Detail "A" for HMA overlay thickness more than 0.43' or concrete overlay.
3. For locations and limits of shoulder backing or embankment see project plans.
4. Grade existing ground to place tapered edge. 1' minimum width
5. Tapered edge transverse joint must match overlay transverse joint. End of #6 longitudinal bar must be 2" ±½" clear from transverse joint.
6. Tapered edge is not needed in the area of MGS, barrier, right turn lane and acceleration lane. See Revised Standard Plan RSP P74.

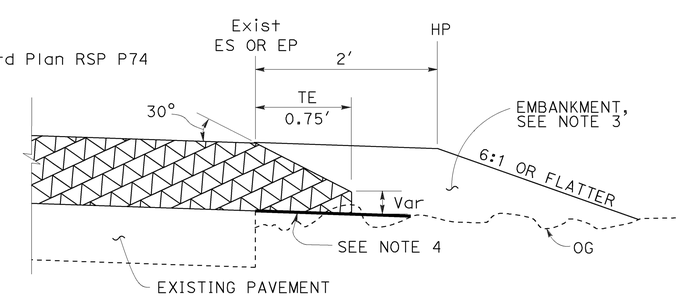

DETAIL "A"
For HMA overlay thickness more than 0.43' or concrete overlay

STATE OF CALIFORNIA
DEPARTMENT OF TRANSPORTATION

PAVEMENT EDGE TREATMENTS-OVERLAYS

NO SCALE

RSP P75 DATED OCTOBER 30, 2015 SUPERSEDES RSP P75 DATED NOVEMBER 15, 2013 AND RSP P75 DATED JANUARY 20, 2012 THAT SUPPLEMENTS THE STANDARD PLANS BOOK DATED 2010.

REVISED STANDARD PLAN RSP P75

7-2-15

Dist	COUNTY	ROUTE	POST MILES TOTAL PROJECT	SHEET No.	TOTAL SHEETS
10	SJ	99	0.0/5.7	98	116

REGISTERED CIVIL ENGINEER

July 15, 2016
PLANS APPROVAL DATE

REGISTERED PROFESSIONAL ENGINEER Carl M. Duan No. C59976 Exp. 6-30-18 CIVIL STATE OF CALIFORNIA

THE STATE OF CALIFORNIA OR ITS OFFICERS OR AGENTS SHALL NOT BE RESPONSIBLE FOR THE ACCURACY OR COMPLETENESS OF SCANNED COPIES OF THIS PLAN SHEET.

TO ACCOMPANY PLANS DATED 5-2-16

NOTE:

1. For notes and Table 2, See Revised Standard Plan RSP D72C.

TABLE 1		
	T_1	Vert BARS
L_1 AND L_2 < 2'-10"	9"	#4 @ 12
L_1 OR L_2 > 2'-10"	12"	#5 @ 12

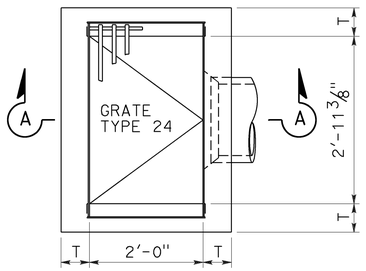

PLAN
TYPE G1

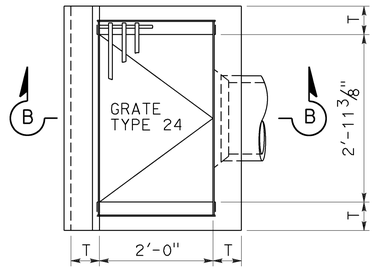

PLAN
TYPE G3

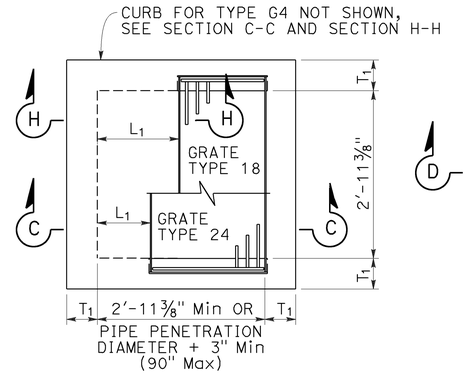

PLAN
STANDARD
TYPE G2 OR G4

FOR "L1", "L2" AND "T1" VALUES, SEE "TABLE 1"

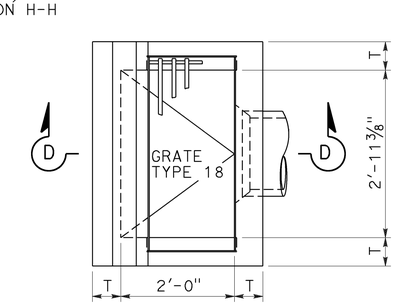

PLAN
TYPE G5

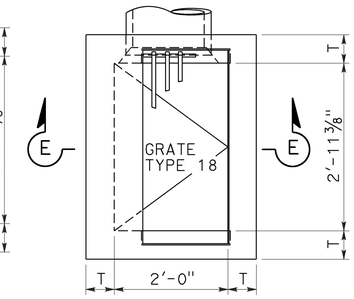

PLAN
TYPE G6

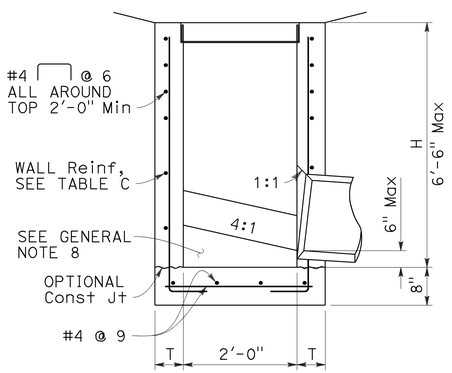

SECTION A-A

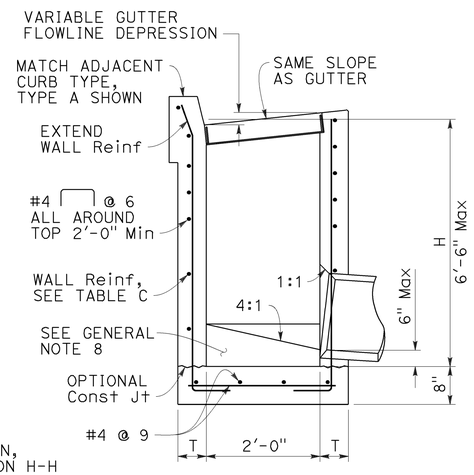

SECTION B-B

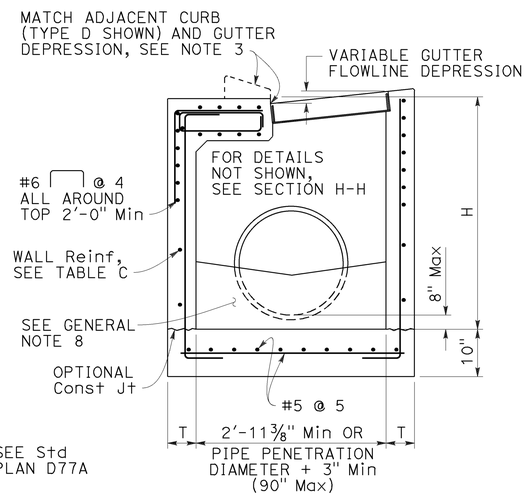

SECTION C-C

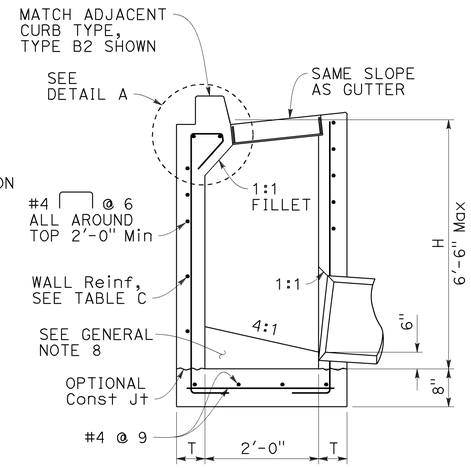

SECTION D-D

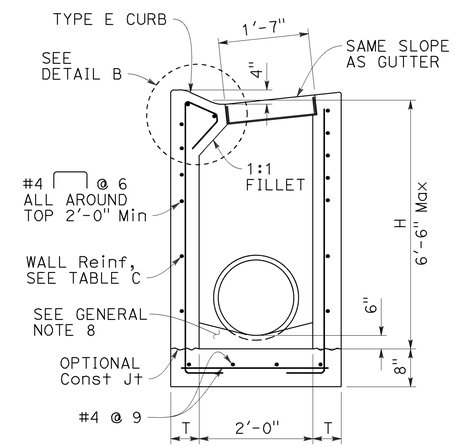

SECTION E-E

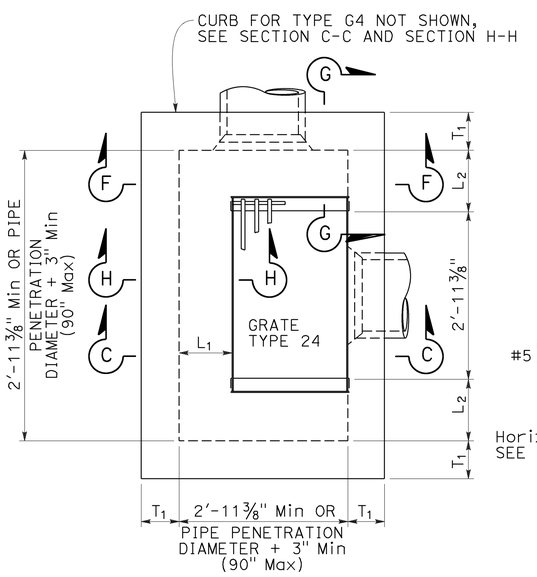

PLAN
EXPANDED
TYPE G2 OR G4

(INTEGRAL TOP ALTERNATIVE)
FOR "L" AND "T" VALUES, SEE TABLE 1

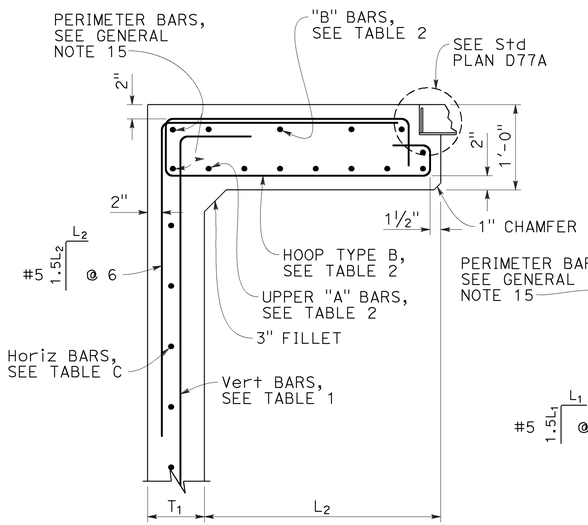

SECTION G-G

FOR "L1", "L2" AND "T1" VALUES, SEE "TABLE 1"

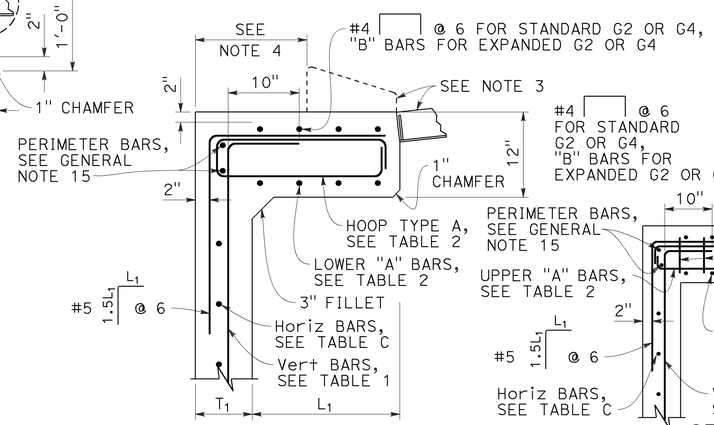

SECTION H-H

FOR "L1", "L2" AND "T1" VALUES, SEE "TABLE 1"

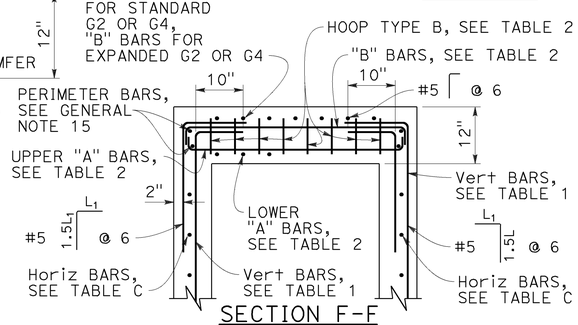

SECTION F-F

FOR "L1", "L2" AND "T1" VALUES, SEE "TABLE 1"

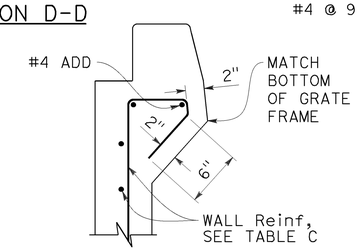

DETAIL A

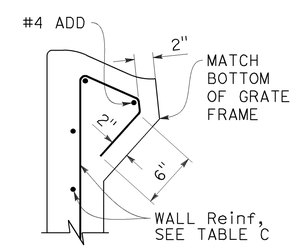

DETAIL B

STATE OF CALIFORNIA
DEPARTMENT OF TRANSPORTATION

CIP DRAINAGE INLETS TYPES G1, G2, G3, G4, G5 AND G6

NO SCALE

RSP D72A DATED JULY 15, 2016 SUPPLEMENTS THE STANDARD PLANS BOOK DATED 2015.

REVISED STANDARD PLAN RSP D72B

2015 REVISED STANDARD PLAN RSP D72B

6-20-16

Dist	COUNTY	ROUTE	POST MILES TOTAL PROJECT	SHEET No.	TOTAL SHEETS
10	SJ	99	0.0/5.7	99	116

REGISTERED CIVIL ENGINEER

July 15, 2016
PLANS APPROVAL DATE

REGISTERED PROFESSIONAL ENGINEER
Carl M. Duan
No. C59976
Exp. 6-30-18
CIVIL
STATE OF CALIFORNIA

THE STATE OF CALIFORNIA OR ITS OFFICERS OR AGENTS SHALL NOT BE RESPONSIBLE FOR THE ACCURACY OR COMPLETENESS OF SCANNED COPIES OF THIS PLAN SHEET.

TO ACCOMPANY PLANS DATED 5-2-16

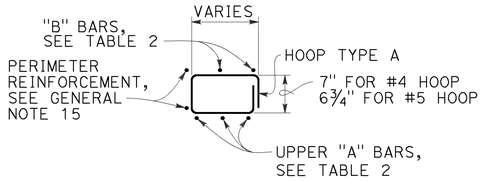

HOOP TYPE A

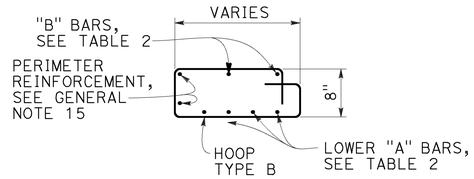

HOOP TYPE B

NOTES:

1. See Revised Standard Plan RSP D72F for General Notes and additional details. See Revised Standard Plan RSP D72G for tables and quantities.
2. Type G4 inlet can use Grate Type 18 or 24. Type G2 inlet uses Grate Type 24.
3. Type G4 inlet details are similar to Type G2 inlet details, except for the addition of a curb and sloped grate to match the adjacent curb and gutter depression.
4. Dimension will vary with different grates, curb types, box width and wall thickness.

TABLE 2 - TOP SLAB REINFORCEMENT

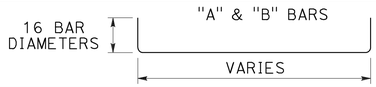

	W/ CURB	W/O CURB
"A" BARS	#4 @ 5 (2 BARS Min)	#5 @ 5 (3 BARS Min)
"B" BARS	#4 @ 10 (2 BARS Min)	#4 @ 12 (2 BARS Min)
HOOPS ("A" & "B")	#4 @ 5	#5 @ 5

ROTATE "A" AND "B" BARS SO HOOKED ENDS WILL MAINTAIN 2" CLEAR COVERAGE.

STATE OF CALIFORNIA
DEPARTMENT OF TRANSPORTATION

CIP DRAINAGE INLETS TYPES G1, G2, G3, G4, G5 AND G6

NO SCALE

RSP D72C DATED JULY 15, 2016 SUPPLEMENTS THE STANDARD PLANS BOOK DATED 2015.

REVISED STANDARD PLAN RSP D72C

2015 REVISED STANDARD PLAN RSP D72C

6-20-16

Dist	COUNTY	ROUTE	POST MILES TOTAL PROJECT	SHEET No.	TOTAL SHEETS
10	SJ	99	0.0/5.7	100	116

REGISTERED CIVIL ENGINEER

July 15, 2016
PLANS APPROVAL DATE

REGISTERED PROFESSIONAL ENGINEER
Carl M. Duan
No. C59976
Exp. 6-30-18
CIVIL
STATE OF CALIFORNIA

THE STATE OF CALIFORNIA OR ITS OFFICERS OR AGENTS SHALL NOT BE RESPONSIBLE FOR THE ACCURACY OR COMPLETENESS OF SCANNED COPIES OF THIS PLAN SHEET.

TO ACCOMPANY PLANS DATED 5-2-16

GENERAL NOTES:

1. "H" is measured from top of bottom slab to the normal gutter grade line undepressed at the curb face.
2. For "T" wall thickness and reinforcement, see Table C on Revised Standard Plan RSP D72G.
3. Wall reinforcement must be placed in the center of the wall thickness with horizontal bars placed on the exterior face. Bottom slab concrete cover must be 3" clear on the interior face unless otherwise noted. Top slab concrete cover must be 2" clear on the exterior face unless otherwise noted. Reinforcement spacing is in inches unless otherwise noted.
4. Steps - None required where "H" is less than 2'-6". Where "H" is 2'-6" or more, install steps with lowest rung 1'-0" above the floor and highest rung not more than 6" below bottom of lid. The distance between steps must not exceed 1'-0" and be uniform throughout the length of the wall. Place steps in the wall without an opening. Steps inserts may be substituted for the bar steps. Step inserts must comply with State Industrial Safety Requirements. See Revised Standard Plan RSP D74 for step details.
5. Pipe(s) can be placed in any wall. Adjacent to each side of the opening, place additional reinforcement equivalent to half the interupted main reinforcement. For larger pipes greater than or equal to 42" diameter, also add 4 diagonal bars, 1 bar each side. Bars must be the same size as the larger of the main vertical or horizontal bars. Extend bars one development length past the intersection with the adjacent diagonal bar, or where bars intersect mid thickness of adjacent wall bottom or top of non-continuous wall, bend ends as required into same plane.
6. Set inlet so that grate bars are parallel to direction of principal surface flow.
7. Curb section must match adjacent curb.
8. Except for inlets used as junction boxes, basin floors must have wood trowel finish and a minimum slope of 4:1, unless otherwise noted, from all directions toward outlet pipe by casting grout fill on top of the bottom slab. The additional volume to achieve the 4:1 slope may also be achieved by casting the bottom slab and fill as a composite concrete element.
9. See Standard Plans D77A and D77B for grate and frame details and weights of miscellaneous iron and steel.
10. See Standard Plans D78A and D78B for gutter depression details.
11. See Standard Plan A87A and Revised Standard Plan RSP A87B for curb and dike details.
12. Details shown apply to metal, concrete and plastic pipe(s).
13. The Contractor may use WWR instead of bar reinforcement. The ratio of bar reinforcement to WWR shall be based on the yield strength ratio.
14. Cast-in-place (CIP) inlets to be formed around all pipes/stubs intersecting the inlet, and concrete poured in one continuous operation.
15. Perimeter reinforcement must not be smaller than main bars and #4 and serves as a rigid frame to position and attach the required structural reinforcement and may be tack welded at outer corners when using ASTM A706 weldable bars.

DESIGN NOTES:

1. Design Specifications: AASHTO LRFD Bridge Design Specifications, 6th edition with 2012 Interims and Errata and CA Amendments.
2. Live Load (AASHTO LRFD 3.6.1.2):
   HL-93, consists of design truck or tandem, and design lane load.
   Dynamic Load Allowance, IM = 33%
   Multiple Presence Factor, m = 1.0
   Design lane load was excluded in Top Slab design.
   A wheel load of 8 kips without impact factor was used for top slabs that are above a curb.
3. Earth Load:
   Vertical pressure = 140 pcf
   Lateral pressure:
   = 100 pcf for walls with flat embankment
   = 140 pcf For walls with slope embankment, 1.5:1 Max
4. Downdrag: ϕ = 34° and γ_E = 120 pcf.
5. Buoyancy: γ_W = 62.4 pcf to finished grade
6. Reinforced Concrete: f'c = 3.6 ksi, fy = 60.0 ksi.
7. Soil pressures shown are factored per AASHTO LRFD and include self-weight, live load and downdrag.

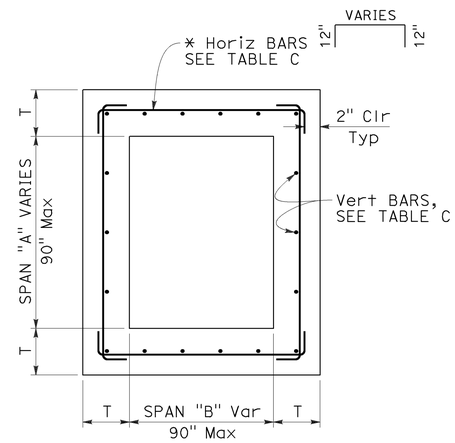

TYPICAL INLET PLAN

* ALTERNATIVE HORIZONTAL BARS

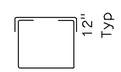

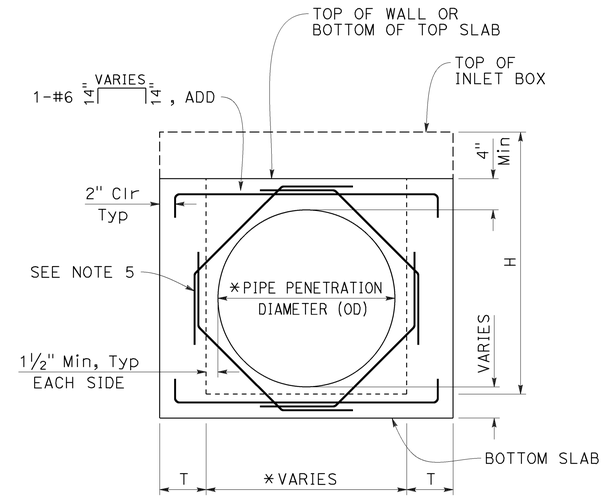

TYPICAL WALL
W/ PIPE OPENING

* SEE "SKEWED PIPE PLAN"

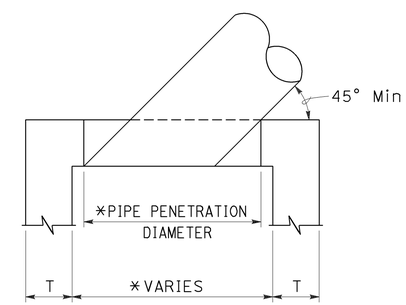

SKEWED PIPE PLAN

* ADJUST PIPE PENETRATION AND BOX WIDTH FOR SKEWED PIPES.

STATE OF CALIFORNIA
DEPARTMENT OF TRANSPORTATION

CIP DRAINAGE INLET NOTES

NO SCALE

RSP D72F DATED JULY 15, 2016 SUPPLEMENTS THE STANDARD PLANS BOOK DATED 2015.

REVISED STANDARD PLAN RSP D72F

2015 REVISED STANDARD PLAN RSP D72F

6-20-16

Dist	COUNTY	ROUTE	POST MILES TOTAL PROJECT	SHEET No.	TOTAL SHEETS
10	SJ	99	0.0/5.7	101	116

REGISTERED CIVIL ENGINEER

July 15, 2016
PLANS APPROVAL DATE

REGISTERED PROFESSIONAL ENGINEER
Carl M. Duan
No. C59976
Exp. 6-30-18
CIVIL
STATE OF CALIFORNIA

THE STATE OF CALIFORNIA OR ITS OFFICERS OR AGENTS SHALL NOT BE RESPONSIBLE FOR THE ACCURACY OR COMPLETENESS OF SCANNED COPIES OF THIS PLAN SHEET.

TO ACCOMPANY PLANS DATED 5-2-16

2015 REVISED STANDARD PLAN RSP D72G

TABLE A - CONCRETE QUANTITIES

TYPE	H=3'-0" TO 8'-0"		H=8'-1" TO 20'-0"	
	H=3'-0" (CY)	ADDITIONAL CONCRETE PER FOOT (CY)	H=8'-1" (CY)	ADDITIONAL CONCRETE PER FOOT (CY)
G1	0.95	0.220	SEE NOTE 2	SEE NOTE 2
G2*	2.00	0.411	5.11	0.525
G3	1.03	0.220	SEE NOTE 2	SEE NOTE 2
G4 (TYPE 18)*	2.02	0.411	5.14	0.525
G4 (TYPE 24)*	1.99	0.411	5.10	0.525
G5	1.02	0.220	SEE NOTE 2	SEE NOTE 2
G6	1.04	0.220	SEE NOTE 2	SEE NOTE 2
OS	1.53	0.278	5.08	0.504
OL7	2.06	0.278	6.17	0.566
OL10	2.85	0.278	6.85	0.566
OL14	3.81	0.278	7.78	0.566
OL21	5.71	0.278	9.62	0.566
GOL7	2.48	0.313	6.89	0.630
GOL10	3.41	0.313	7.85	0.630
GT1	1.72	0.248	SEE NOTE 2	SEE NOTE 2
GT2	2.93	0.530	7.73	0.762
GT3	1.74	0.348	SEE NOTE 2	SEE NOTE 2
GT4	2.83	0.530	7.62	0.762
GO	1.26	0.245	4.90	0.506
GDO	1.74	0.322	6.33	0.647

* Quantities are based on the minimum interior dimensions.

TABLE B - REINFORCEMENT QUANTITIES

TYPE	H=3'-0" TO 8'-0"		H=8'-1" TO 20'-0"	
	H=3'-0" (LB)	ADDITIONAL REINFORCEMENT PER FOOT (LB)	H=8'-1" (LB)	ADDITIONAL REINFORCEMENT PER FOOT (LB)
G1	118	22.20	SEE NOTE 2	SEE NOTE 2
G2*	729	86.48	1794	171.79
G3	118	22.20	SEE NOTE 2	SEE NOTE 2
G4 (TYPE 18)*	647	86.48	1675	171.79
G4 (TYPE 24)*	647	86.48	1675	171.79
G5	118	22.20	SEE NOTE 2	SEE NOTE 2
G6	118	22.20	SEE NOTE 2	SEE NOTE 2
OS	245	49.88	1057	120.77
OL7	458	50.53	1324	126.75
OL10	729	50.53	1595	126.75
OL14	982	50.53	1849	126.75
OL21	1453	50.53	2320	126.75
GOL7	644	83.57	1969	148.79
GOL10	883	83.57	2208	148.79
GT1	486	96.91	SEE NOTE 2	SEE NOTE 2
GT2	1040	117.08	2543	233.37
GT3	486	96.91	SEE NOTE 2	SEE NOTE 2
GT4	1001	117.08	2556	237.88
GO	308	32.44	1013	96.56
GDO	519	57.09	1654	165.66

* Quantities are based on the minimum interior dimensions.

TABLE D

INLET	CURB USED IN QUANTITIES
G1	-
G2	-
G3	A1-6
G4 (Type 18)	A1-6
G4 (Type 24)	A1-6
G5	B1-4
G6	½E
OS	-
OL7	-
OL10	-
OL14	-
OL21	-
GOL7	-
GOL10	-
GT1	D-6
GT2	E
GT3	A2-8
GT4	A2-8
GO	-
GDO	-

TABLE C - WALL REINFORCEMENT

TYPE	H≤8 (T=6",UON)		8<H≤20 (T=11",UON)	
	HORIZ	VERTICAL	HORIZ	VERTICAL
OS	#4 @ 8	#4 @ 6	#5 @ 6	#6 @ 4.5
OL	#4 @ 6	#4 @ 6	#5 @ 6	#6 @ 4.5
GOL	#5 @ 6	#5 @ 8	#6 @ 5	#6 @ 4.5
G1 (H≤6-6")	#3 @ 6	#3 @ 6	-	-
G2	T=9" #5 @ 5	#5 @ 5	T=11" #6 @ 4	#6 @ 4.5
G3 (H≤6-6")	#3 @ 6	#3 @ 6	-	-
G4	T=9" #5 @ 5	#5 @ 5	T=11" #6 @ 4	#6 @ 4.5
G5 (H≤6-6")	#3 @ 6	#3 @ 6	-	-
G6 (H≤6-6")	#3 @ 6	#3 @ 6	-	-
GT1 (H≤6-6")	#5 @ 6	#5 @ 6	-	-
GT2	T=8" #5 @ 6	#5 @ 6	#6 @ 4	#6 @ 4.5
GT3 (H≤6-6")	#5 @ 6	#5 @ 6	-	-
GT4	T=8" #5 @ 6	#5 @ 6	#6 @ 4	#6 @ 4.5
GO	#4 @ 9	#4 @ 6	#4 @ 6	#6 @ 4.5
GDO	#4 @ 6	#4 @ 6	#5 @ 4	#6 @ 4.5

TABLE E

SOIL PRESSURE BELOW BASE SLAB (ksf)		
TYPE	H=8'-0"	8'-0"< H ≤20'-0"
OS	2.93	5.56
OL*	2.93	5.56
GOL*	2.50	5.06
G1	3.67	-
G2	2.99	5.91
G3	3.67	-
G4	2.99	5.91
G5	3.67	-
G6	3.67	-
GT1	3.66	-
GT2	3.91	6.07
GT3	3.86	-
GT4	3.91	6.07
GO	3.42	6.11
GDO	2.52	6.95

* Main Box

NOTES:

1. No deduction or adjustment was made to the quantities of concrete and reinforcement for pipe openings, floor alternatives or curb type.
2. Maximum allowable height is 6'-6".
3. Quantities are approximate and for design purposes only.
4. Design is based on envelope of level and sloped ground.

STATE OF CALIFORNIA
DEPARTMENT OF TRANSPORTATION

CIP DRAINAGE INLET TABLES

NO SCALE

RSP D72G DATED JULY 15, 2016 SUPPLEMENTS THE STANDARD PLANS BOOK DATED 2015.

REVISED STANDARD PLAN RSP D72G

6-20-16

Dist	COUNTY	ROUTE	POST MILES TOTAL PROJECT	SHEET No.	TOTAL SHEETS
10	SJ	99	0.0/5.7	102	116

Raymond Don Tsztoo
REGISTERED CIVIL ENGINEER

April 19, 2013
PLANS APPROVAL DATE

REGISTERED PROFESSIONAL ENGINEER Raymond Don Tsztoo No. C37332 Exp. 6-30-14 CIVIL STATE OF CALIFORNIA

THE STATE OF CALIFORNIA OR ITS OFFICERS OR AGENTS SHALL NOT BE RESPONSIBLE FOR THE ACCURACY OR COMPLETENESS OF SCANNED COPIES OF THIS PLAN SHEET.

TO ACCOMPANY PLANS DATED 5-2-16

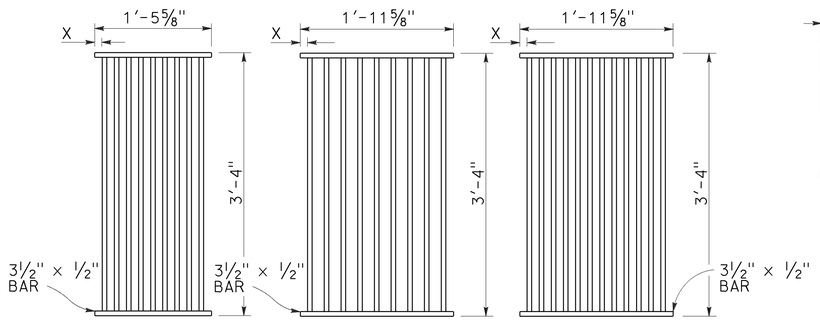

TYPE 18-9
1⅜" Clear spacing. Use within the roadbed on highways where bicycles and pedestrians are excluded.

TYPE 24-9
2" Clear spacing. Use in locations off the roadbed on all types of highways.

TYPE 24-12
1⅜" Clear spacing. Use within the roadbed on highways where bicycles and pedestrians are excluded.

RECTANGULAR GRATE DETAILS
(See table below)

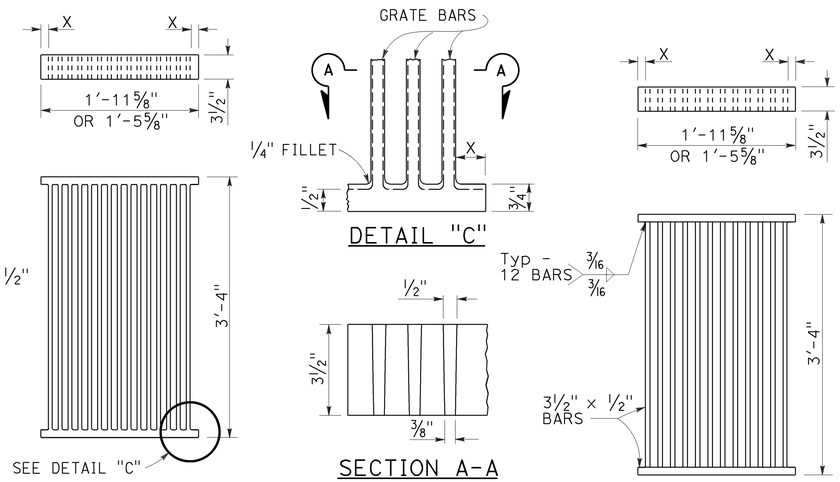

ALTERNATIVE CAST DUCTILE IRON GRATE OR CAST CARBON STEEL GRATE

ALTERNATIVE WELDED GRATE

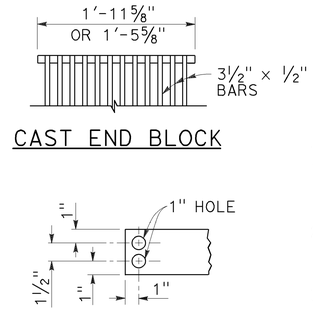

CAST END BLOCK

END OF BAR

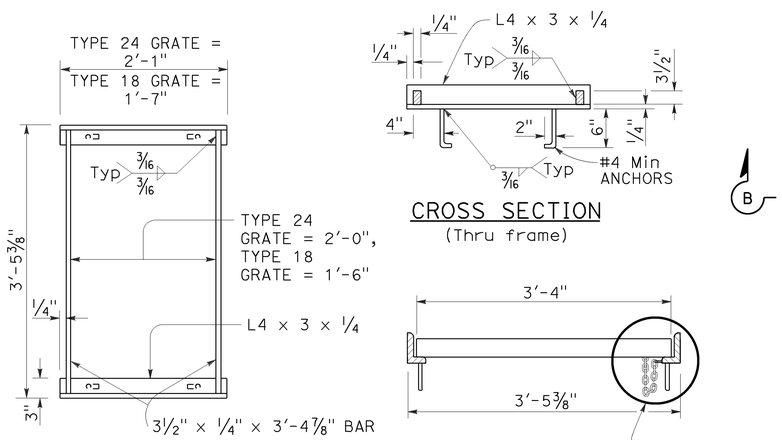

TYPICAL FRAME

CROSS SECTION
(Thru frame)

LONGITUDINAL SECTION
(Thru frame and grate)

RECTANGULAR FRAME DETAILS
(For all rectangular grates)

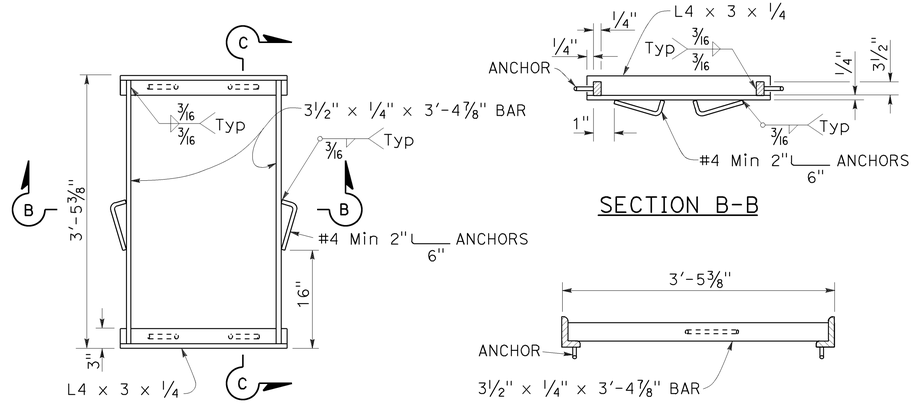

TYPICAL FRAME

SECTION B-B

SECTION C-C

ALTERNATIVE ANCHOR FOR RECTANGULAR FRAME
(For details not shown, See Rectangular Frame Details)

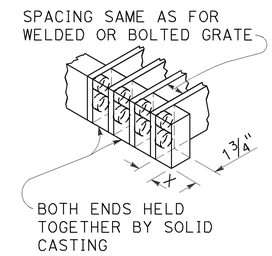

ALTERNATIVE CAST DUCTILE IRON OR CAST CARBON STEEL END BLOCK GRATE

NOTES:

1. Grate type numbers refer to approximate width of grate in inches and number of bars, respectively.
2. Contractor has the option of using cast ductile iron, cast carbon steel, welded, bolted, or cast end block grate.
3. Rounded top of bars optional on all grates.
4. Pipe inlets with a grate shall be placed so that bars parallel direction of principle surface flow.
5. Complete joint penetration butt welds may be substituted for the fillet welds on all anchors.
6. Standard square, hexagon, round or equivalent headed anchors may be substituted for the right angle hooks on the anchors shown on this plan.
7. Grate and frame weights are based on welded grates (weights of face angles, steps, protection bars, etc. are not included).
8. Connect chain to grate and frame only at locations shown on the plans. When chain is required, do not use cast ductile iron grates.

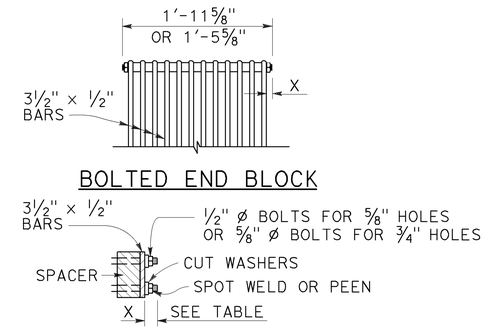

ALTERNATIVE BOLTED GRATE

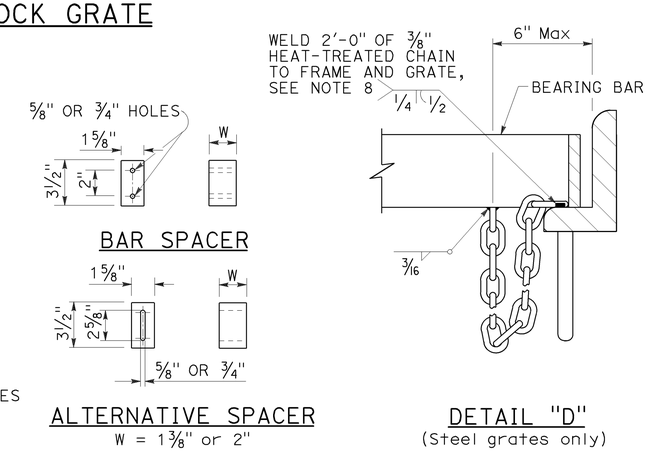

GRATE BAR SPACING TABLE

TYPE	No. OF BARS	CLEAR BAR SPACING	X
18-9	9	1⅜"	1 1/16"
24-9	9	2"	1 9/16"
24-12	12	1⅜"	1¼"

INLET TYPE	COVER TYPE	WEIGHT LB
OS	PLATE	174
OL-7	PLATE	170
OL-10	PLATE	170
OL-14	PLATE	170
OL-21	PLATE	170
OCP	PLATE	112
OCPI	PLATE	112
OCPI	REDWOOD	42
OMP	PLATE	177
OMPI	PLATE	177

INLET TYPE	GRATE TYPE	No. OF GRATES	WEIGHT LB
GDO	24-12	2	634
GOL-7	24-12	1	326
GOL-10	24-12	1	326
GO,G1,G2,G3,G4 (TYPE 24)	24-9	1	263
	24-12	1	326
G4 (TYPE 18),G5,G6	18-9	1	249
GT1	18-9	2	498
GT2	18-9	2	498
GT3	24-12	2	652
GT4	24-12	2	652
TRASH RACK			22
GRATE CHAIN			3

BASIS FOR Misc IRON & STEEL FINAL PAY WEIGHTS FOR DRAINAGE INLETS
(See Note 7)

STATE OF CALIFORNIA
DEPARTMENT OF TRANSPORTATION

GRATE DETAILS No. 1

NO SCALE

RSP D77A DATED APRIL 19, 2013 SUPERSEDES RSP D77A DATED JULY 20, 2012 AND STANDARD PLAN D77A DATED MAY 20, 2011 - PAGE 164 OF THE STANDARD PLANS BOOK DATED 2010.

REVISED STANDARD PLAN RSP D77A

2010 REVISED STANDARD PLAN RSP D77A

4-4-13

Dist	COUNTY	ROUTE	POST MILES TOTAL PROJECT	SHEET No.	TOTAL SHEETS
10	SJ	99	0.0/5.7	103	116

REGISTERED CIVIL ENGINEER

July 19, 2013
PLANS APPROVAL DATE

REGISTERED PROFESSIONAL ENGINEER
Gurinderpal Bhullar
No. C48815
Exp. 9-30-14
CIVIL
STATE OF CALIFORNIA

THE STATE OF CALIFORNIA OR ITS OFFICERS OR AGENTS SHALL NOT BE RESPONSIBLE FOR THE ACCURACY OR COMPLETENESS OF SCANNED COPIES OF THIS PLAN SHEET.

TO ACCOMPANY PLANS DATED 5-2-16

2010 REVISED STANDARD PLAN RSP T9

TABLE 1

TAPER LENGTH CRITERIA AND CHANNELIZING DEVICE SPACING

SPEED (S)	MINIMUM TAPER LENGTH * FOR WIDTH OF OFFSET 12 FEET (W)				MAXIMUM CHANNELIZING DEVICE SPACING		
					X	Y	Z **
	TANGENT 2L	MERGING L	SHIFTING L/2	SHOULDER L/3	TAPER	TANGENT	CONFLICT
mph	ft	ft	ft	ft	ft	ft	ft
20	160	80	40	27	20	40	10
25	250	125	63	42	25	50	12
30	360	180	90	60	30	60	15
35	490	245	123	82	35	70	17
40	640	320	160	107	40	80	20
45	1080	540	270	180	45	90	22
50	1200	600	300	200	50	100	25
55	1320	660	330	220	55	110	27
60	1440	720	360	240	60	120	30
65	1560	780	390	260	65	130	32
70	1680	840	420	280	70	140	35

* - For other offsets, use the following merging taper length formula for L:
For speed of 40 mph or less, $L = WS^2/60$
For speed of 45 mph or more, $L = WS$

Where: L = Taper length in feet
W = Width of offset in feet
S = Posted speed limit, off-peak 85th-percentile speed prior to work starting, or the anticipated operating speed in mph

** - Use for taper and tangent sections where there are no pavement markings or where there is a conflict between existing pavement markings and channelizers (CA).

TABLE 2

LONGITUDINAL BUFFER SPACE AND FLAGGER STATION SPACING

SPEED *	Min D **	DOWNGRADE Min D ***		
		-3%	-6%	-9%
mph	ft	ft	ft	ft
20	115	116	120	126
25	155	158	165	173
30	200	205	215	227
35	250	257	271	287
40	305	315	333	354
45	360	378	400	427
50	425	446	474	507
55	495	520	553	593
60	570	598	638	686
65	645	682	728	785
70	730	771	825	891

* - Speed is posted speed limit, off-peak 85th-percentile speed prior to work starting, or the anticipated operating speed in mph

** - Longitudinal buffer space or flagger station spacing

*** - Use on sustained downgrade steeper than -3 percent and longer than 1 mile.

TABLE 3

ADVANCE WARNING SIGN SPACING

ROAD TYPE	DISTANCE BETWEEN SIGNS *		
	A	B	C
	ft	ft	ft
URBAN - 25 mph OR LESS	100	100	100
URBAN - MORE THAN 25 mph TO 40 mph	250	250	250
URBAN - MORE THAN 40 mph	350	350	350
RURAL	500	500	500
EXPRESSWAY / FREEWAY	1000	1500	2640

* - The distances are approximate, are intended for guidance purposes only, and should be applied with engineering judgment. These distances should be adjusted by the Engineer for field conditions, if necessary, by increasing or decreasing the recommmended distances.

STATE OF CALIFORNIA
DEPARTMENT OF TRANSPORTATION

TRAFFIC CONTROL SYSTEM TABLES FOR LANE AND RAMP CLOSURES

NO SCALE

RSP T9 DATED JULY 19, 2013 SUPERSEDES RSP T9 DATED APRIL 19, 2013 THAT SUPPLEMENTS THE STANDARD PLANS BOOK DATED 2010.

REVISED STANDARD PLAN RSP T9

Dist	COUNTY	ROUTE	POST MILES TOTAL PROJECT	SHEET No.	TOTAL SHEETS
10	SJ	99	0.0/5.7	104	116

REGISTERED CIVIL ENGINEER

April 19, 2013
PLANS APPROVAL DATE

REGISTERED PROFESSIONAL ENGINEER Gurinderpal Bhullar No. C48815 Exp. 9-30-14 CIVIL STATE OF CALIFORNIA

THE STATE OF CALIFORNIA OR ITS OFFICERS OR AGENTS SHALL NOT BE RESPONSIBLE FOR THE ACCURACY OR COMPLETENESS OF SCANNED COPIES OF THIS PLAN SHEET.

TO ACCOMPANY PLANS DATED 5-2-16

NOTES:

See Revised Standard Plan RSP T9 for tables.

Use cone spacing X for taper segment, Y for tangent segment or Z for conflict situations, as approriate, per Table 1, unless X, Y, or Z cone spacing is shown on this sheet.

Unless otherwise specified in the special provisions, all temporary warning signs shall have black legend on fluorescent orange background.

California codes are designated by (CA). Otherwise, Federal (MUTCD) codes are shown.

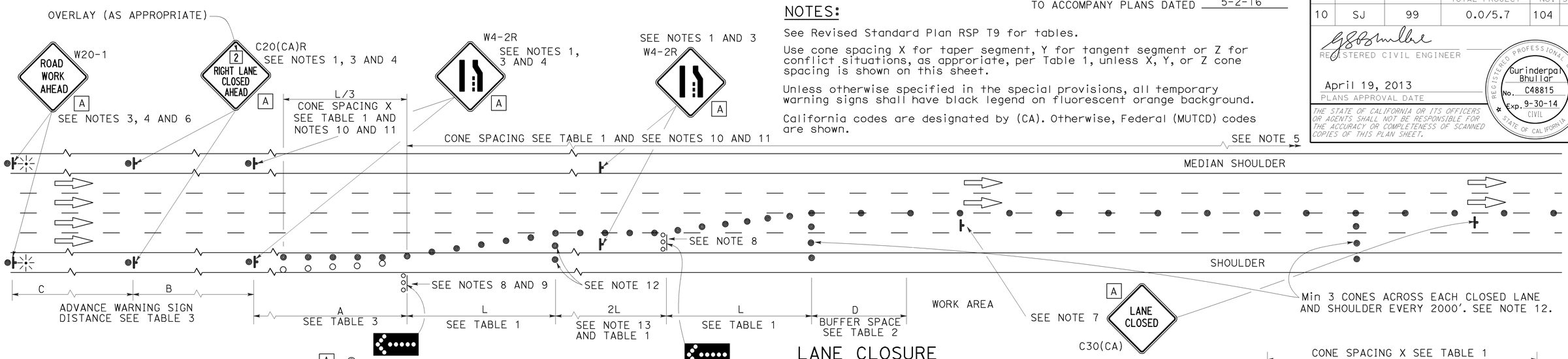

LANE CLOSURE

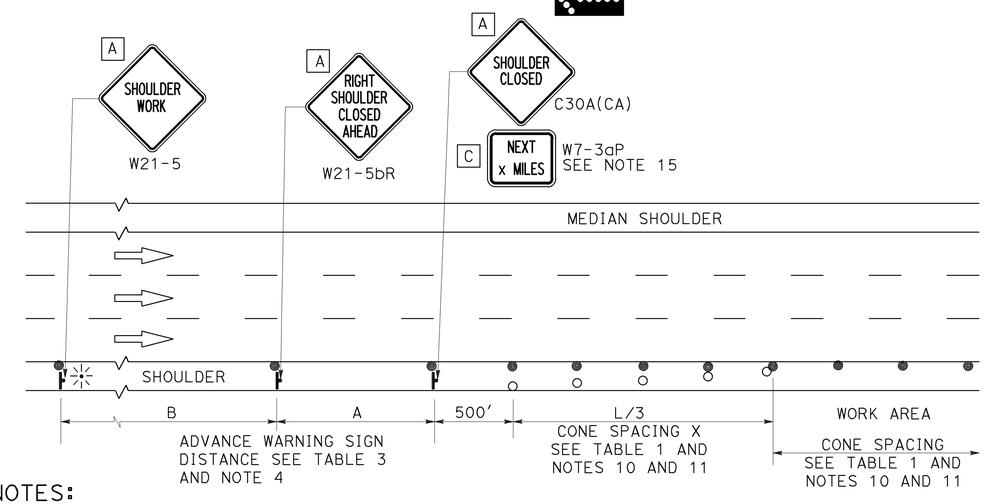

SHOULDER CLOSURE

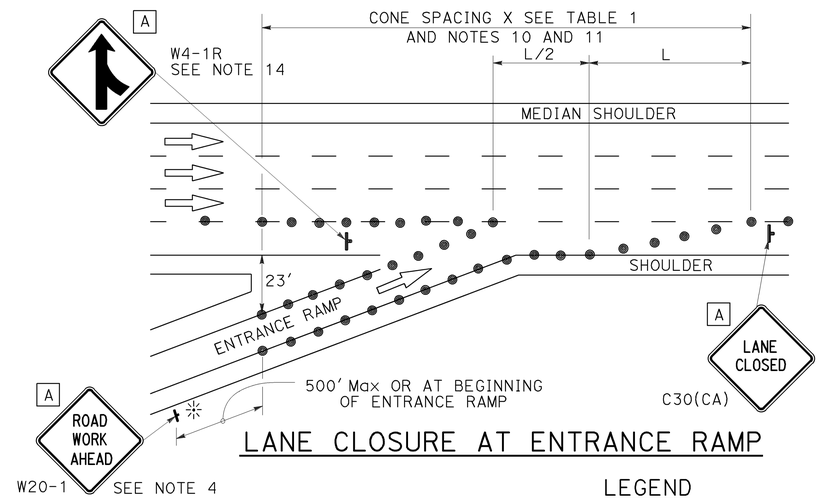

LANE CLOSURE AT ENTRANCE RAMP

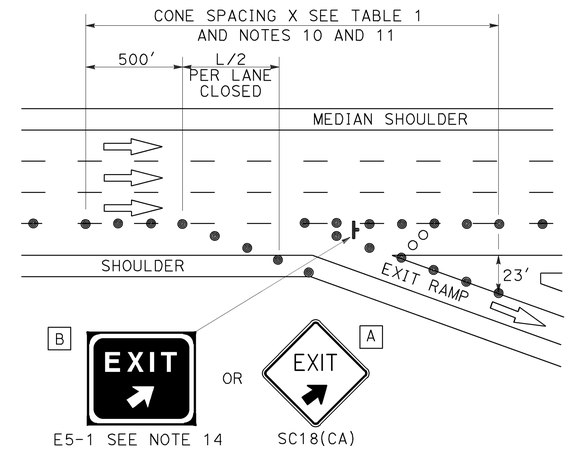

LANE CLOSURE AT EXIT RAMP

NOTES:

1. Median lane closures shall conform to the details as shown except that C20(CA)L and W4-2L signs shall be used.
2. At least one person shall be assigned to provide full time maintenance of traffic control devices for lane closures.
3. Duplicate sign installations are not required:
   a) On opposite shoulder if at least one-half of the available lanes remain open to traffic.
   b) In the median if the width of the median shoulder is less than 8' and the outside lanes are to be closed.
4. Each advance warning sign on each side of the roadway shall be equipped with at least two flags for daytime closure. Each flag shall be at least 16" x 16" in size and shall be orange or fluorescent red-orange in color. Flashing beacons shall be placed at the locations indicated for lane closure during hours of darkness.
5. A G20-2 "END ROAD WORK" sign, with minimum size of 48" x 24" as appropriate, shall be placed at the end of the lane closure unless the end of work area is obvious or ends within a larger project's limits.
6. If the W20-1 sign would follow within 2000' of a stationary W20-1 or G20-1 "ROAD WORK NEXT _____ MILES", use a C20(CA) sign for the first advance warning sign.
7. Place a C30(CA) sign every 2000' throughout length of lane closure.
8. One flashing arrow sign for each lane closed. The flashing arrow signs shall be Type I.
9. A minimum 1500' of sight distance shall be provided where possible for vehicles approaching the first flashing arrow sign. Lane closures shall not begin at top of crest vertical curve or on a horizontal curve.
10. All cones used for lane closures during the hours of darkness shall be fitted with retroreflective bands (or sleeves) as specified in the specifications.
11. Portable delineators, placed at one-half the spacing indicated for traffic cones may be used instead of cones for daytime closures only.
12. Unless otherwise specified in the special provisions, a minimum of 3 cones shall be placed transversely across each closed lane and shoulder at each location where a taper across a traffic lane ends and every 2000' as shown on the "Lane Closure" detail. Two Type II barricades may be used instead of the 3 cones. The transverse alignment of the cones or barricades on the closed shoulder may be shifted from the transverse alignment to provide access to the work.
13. Unless otherwise specified in the special provisions, the 2L tangent shown along lane lines shall be used between the L tapers required for each closed traffic lane.
14. Unless otherwise specified in the special provisions, the E5-1 or SC18(CA) and W4-1 signs shall be used as shown.
15. A W7-3aP "NEXT____ MILES" plaque must be used if theshoulder closure extends beyond the distance that can be perceived by road users.

LEGEND

- TRAFFIC CONE
- TRAFFIC CONE (OPTIONAL TAPER)
- TEMPORARY TRAFFIC CONTROL SIGN
- FLASHING ARROW SIGN (FAS)
- FAS SUPPORT OR TRAILER
- PORTABLE FLASHING BEACON

SIGN PANEL SIZE (Min)

A	48" x 48"
B	72" x 60"
C	36" x 30"

STATE OF CALIFORNIA
DEPARTMENT OF TRANSPORTATION

TRAFFIC CONTROL SYSTEM FOR LANE CLOSURE ON FREEWAYS AND EXPRESSWAYS

NO SCALE

RSP T10 DATED APRIL 19, 2013 SUPERSEDES STANDARD PLAN T10 DATED MAY 20, 2011 - PAGE 237 OF THE STANDARD PLANS BOOK DATED 2010.

REVISED STANDARD PLAN RSP T10

2010 REVISED STANDARD PLAN RSP T10

12-18-12

Dist	COUNTY	ROUTE	POST MILES TOTAL PROJECT	SHEET No.	TOTAL SHEETS
10	SJ	99	0.0/5.7	105	116

REGISTERED CIVIL ENGINEER

April 19, 2013
PLANS APPROVAL DATE

REGISTERED PROFESSIONAL ENGINEER Gurinderpal Bhullar No. C48815 Exp. 9-30-14 CIVIL STATE OF CALIFORNIA

THE STATE OF CALIFORNIA OR ITS OFFICERS OR AGENTS SHALL NOT BE RESPONSIBLE FOR THE ACCURACY OR COMPLETENESS OF SCANNED COPIES OF THIS PLAN SHEET.

TO ACCOMPANY PLANS DATED 5-2-16

TYPICAL RAMP CLOSURES

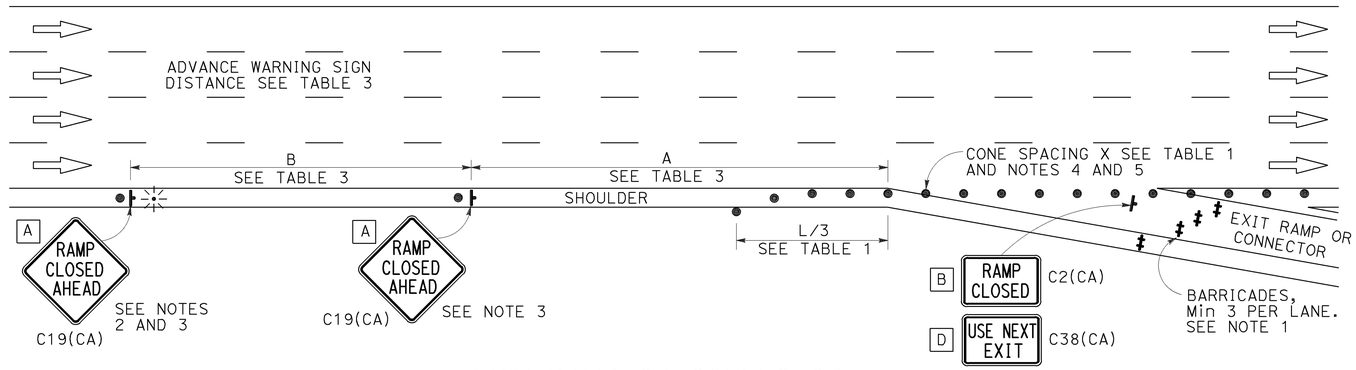

EXIT RAMP OR CONNECTOR

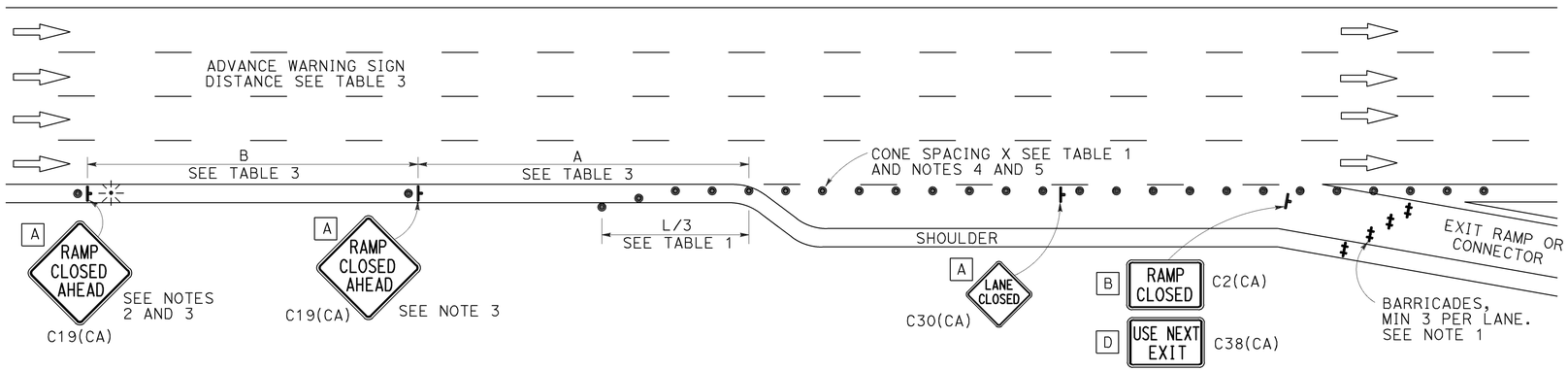

EXIT RAMP OR CONNECTOR WITH ADDITIONAL LANE

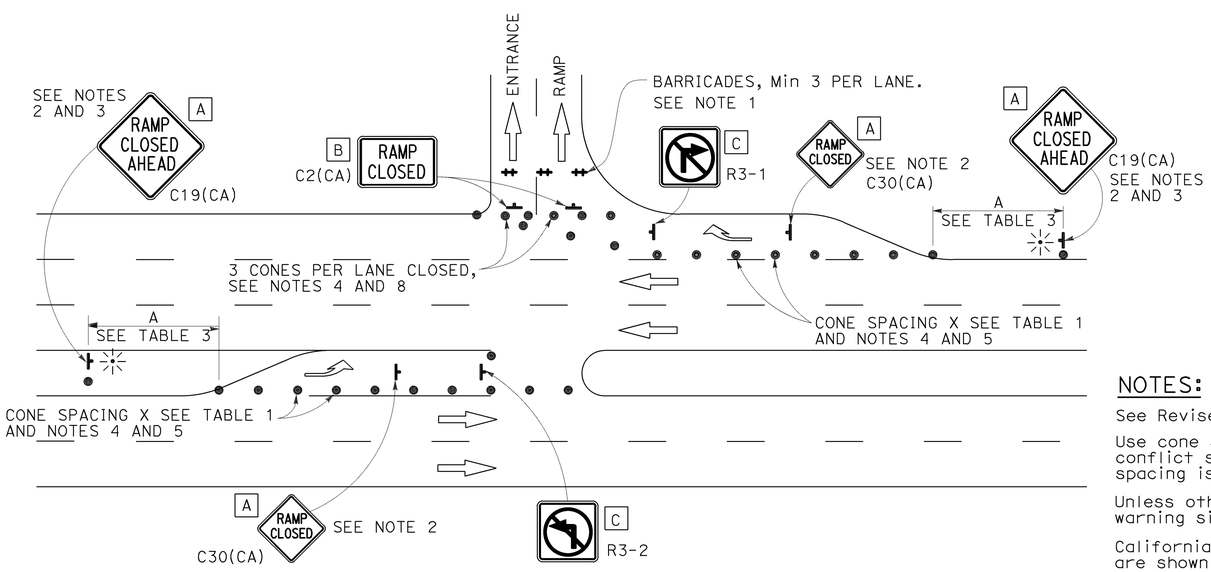

ENTRANCE RAMP WITH TURNING POCKETS

SIGN PANEL SIZE (Min)

- A 48" × 48"
- B 48" × 30"
- C 36" × 36"
- D 48" × 36"

LEGEND

- TRAFFIC CONE
- TEMPORARY TRAFFIC CONTROL SIGN
- BARRICADES
- PORTABLE FLASHING BEACON

NOTES:

1. Barricades shall be Type I, II, or III for closures lasting one week or less and Type III for closures lasting longer than one week.
2. In addition to placing the C19(CA) "RAMP CLOSED AHEAD" and C30(CA) "RAMP CLOSED" signs, black on orange overlay plates with the word "CLOSED" may be mounted, as directed by the Engineer, on all guide signs that refer to the closed ramp. The letter size on the overlay shall be the same as the guide sign.
3. Each advance C19(CA) "RAMP CLOSED AHEAD" sign shall be equipped with at least two flags for daytime closure. Each flag shall be at least 16" × 16" in size and shall be orange or fluorescent red-orange in color. A flashing beacon shall be placed on top of the first C19(CA) sign during hours of darkness.
4. All cones used for ramp closures during the hours of darkness shall be fitted with retroreflective bands (or sleeves) as specified in the specifications.
5. Portable delineators, placed at one-half the spacing indicated for traffic cones, may be used instead of cones for daytime ramp closures only.
6. At least one person shall be assigned to provide full time maintenance of traffic control devices, unless otherwise directed by the Engineer.
7. The existing "EXIT" signs shall be covered during ramp closures.
8. A minimum of 3 cones shall be placed transversely across each closed lane and shoulder.

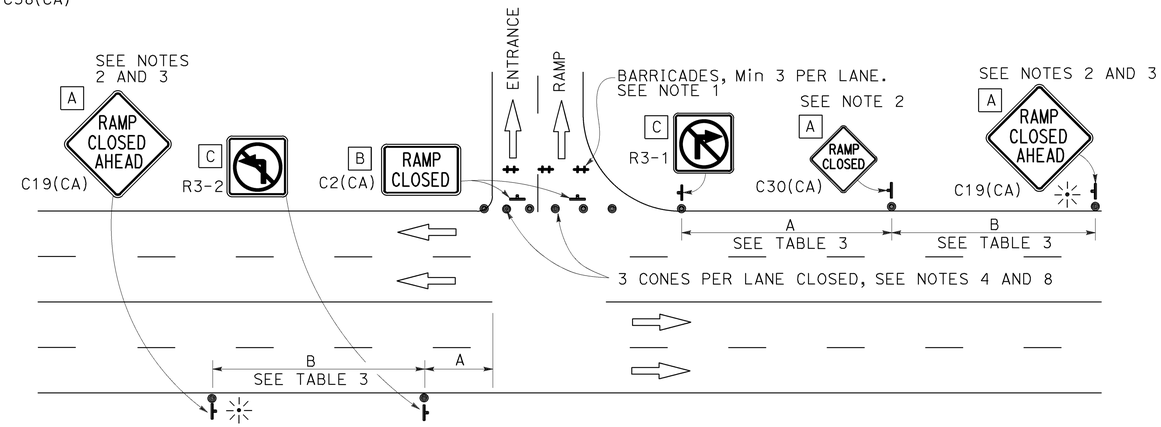

ENTRANCE RAMP WITHOUT TURNING POCKETS

NOTES:

See Revised Standard Plan RSP T9 for tables.

Use cone spacing X for taper segment, Y for tangent segment or Z for conflict situations, as approriate, per Table 1, unless X, Y, or Z cone spacing is shown on this sheet.

Unless otherwise specified in the special provisions, all temporary warning signs shall have black legend on fluorescent orange background.

California codes are designated by (CA). Otherwise, Federal (MUTCD) codes are shown.

STATE OF CALIFORNIA
DEPARTMENT OF TRANSPORTATION

TRAFFIC CONTROL SYSTEM FOR RAMP CLOSURE

NO SCALE

RSP T14 DATED APRIL 19, 2013 SUPERSEDES STANDARD PLAN T14
DATED MAY 20, 2011 - PAGE 242 OF THE STANDARD PLANS BOOK DATED 2010.

REVISED STANDARD PLAN RSP T14

2010 REVISED STANDARD PLAN RSP T14

12-18-12

Dist	COUNTY	ROUTE	POST MILES TOTAL PROJECT	SHEET No.	TOTAL SHEETS
10	SJ	99	0.0/5.7	106	116

REGISTERED CIVIL ENGINEER

April 19, 2013
PLANS APPROVAL DATE

REGISTERED PROFESSIONAL ENGINEER Gurinderpal Bhullar No. C48815 Exp. 9-30-14 CIVIL STATE OF CALIFORNIA

THE STATE OF CALIFORNIA OR ITS OFFICERS OR AGENTS SHALL NOT BE RESPONSIBLE FOR THE ACCURACY OR COMPLETENESS OF SCANNED COPIES OF THIS PLAN SHEET.

TO ACCOMPANY PLANS DATED 5-2-16

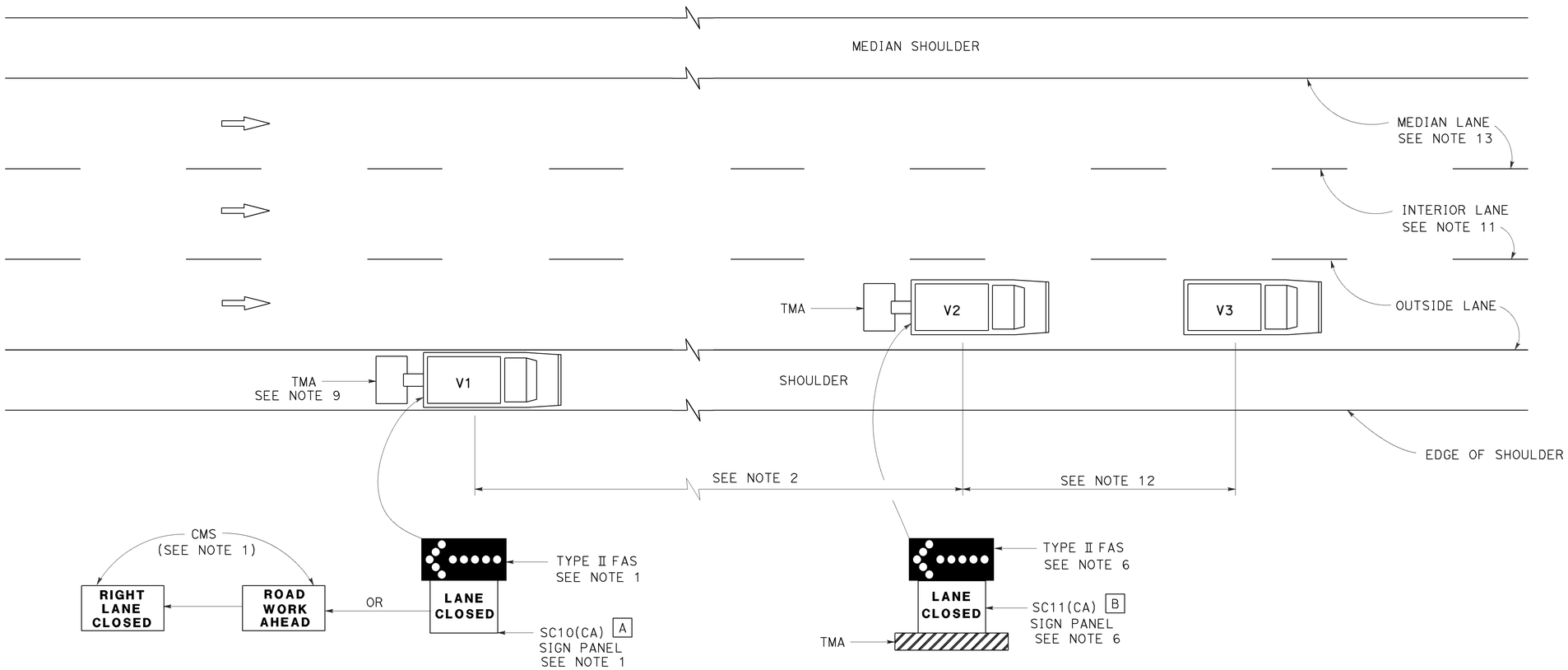

MOVING LANE CLOSURE ON MEDIAN LANE OR OUTSIDE LANE OF MULTILANE HIGHWAYS

SIGN PANEL SIZE (Min)

A 66" x 36"

B 54" x 42"

LEGEND

V1	SIGN VEHICLE
V2	SHADOW VEHICLE
V3	WORK/APPLICATION VEHICLE
	FLASHING ARROW SIGN (FAS)
CMS	CHANGEABLE MESSAGE SIGN
TMA	TRUCK-MOUNTED ATTENUATOR

NOTES:

1. Either a changeable message sign or a SC10(CA) sign panel and a Type II flashing arrow sign shall be mounted on the rear of sign vehicle V1. The changeable message sign shall be sequenced to show the "ROAD WORK AHEAD" message first, followed by the "RIGHT LANE CLOSED" message. For median lane closure, the flashing arrow symbol shall be reversed with the arrowhead on the right and the changeable message sign shall show "LEFT LANE CLOSED".
2. If traffic queues develop, sign vehicle V1 should be positioned upstream from the end of queue. Sign vehicle V1 shall be positioned where highly visible when shoulders are not available.
3. A minimum sight distance of 1500′ should be provided in advance of sign vehicle V1.
4. Sign vehicle V1 should remain at the beginning of horizontal or vertical curves until the other vehicles (V2 and V3) are far enough beyond the curve to resume the minimum sight distance of 1500′.
5. Vehicle-mounted sign panels shall have Type III or above retroreflective sheeting, black on white, or black on fluorescent orange, with 6" minimum series D letters per Caltrans sign specifications.
6. Shadow vehicle V2 shall be equipped with a truck-mounted attenuator. The sign panel shown and a Type II flashing arrow sign shall be mounted on the rear of shadow vehicle V2. For median lane closure the flashing arrow sign symbol shall be displayed with the arrowhead on the right.
7. All vehicles used for lane closures shall be equipped with two-way radios, and the vehicle operators shall maintain communication during the work or application operation.
8. All vehicles shall be equipped with flashing or rotating amber lights.
9. If sign vehicle V1 encroaches into the traffic lane due to insufficient shoulder width, sign vehicle V1 shall be equipped with a truck-mounted attenuator. Sign vehicle V1 shall stay as close to the edge of shoulder as practicable.
10. Where workers would be on foot in the work area, a stationary type lane closure (Revised Standard Plan T10, T11, etc., as applicable) shall be used instead of this plan.
11. For moving lane closure on interior lane of multilane highways, use Revised Standard Plan T16.
12. The spacing between work vehicle(s) and the shadow vehicles, and between each shadow vehicle should be minimized to deter road users from driving in between.
13. When the work/application vehicle V3 occupies the median lane, sign vehicle V1 should drive in the median shoulder and indicate left lane closed ahead.

STATE OF CALIFORNIA
DEPARTMENT OF TRANSPORTATION

TRAFFIC CONTROL SYSTEM FOR MOVING LANE CLOSURE ON MULTILANE HIGHWAYS

NO SCALE

RSP T15 DATED APRIL 19, 2013 SUPERSEDES STANDARD PLAN T15
DATED MAY 20, 2011 - PAGE 243 OF THE STANDARD PLANS BOOK DATED 2010.

REVISED STANDARD PLAN RSP T15

2010 REVISED STANDARD PLAN RSP T15

12-18-12

Dist	COUNTY	ROUTE	POST MILES TOTAL PROJECT	SHEET No.	TOTAL SHEETS
10	SJ	99	0.0/5.7	107	116

REGISTERED CIVIL ENGINEER

April 19, 2013
PLANS APPROVAL DATE

REGISTERED PROFESSIONAL ENGINEER
Gurinderpal Bhullar
No. C48815
Exp. 9-30-14
CIVIL
STATE OF CALIFORNIA

THE STATE OF CALIFORNIA OR ITS OFFICERS OR AGENTS SHALL NOT BE RESPONSIBLE FOR THE ACCURACY OR COMPLETENESS OF SCANNED COPIES OF THIS PLAN SHEET.

TO ACCOMPANY PLANS DATED 5-2-16

2010 REVISED STANDARD PLAN RSP T16

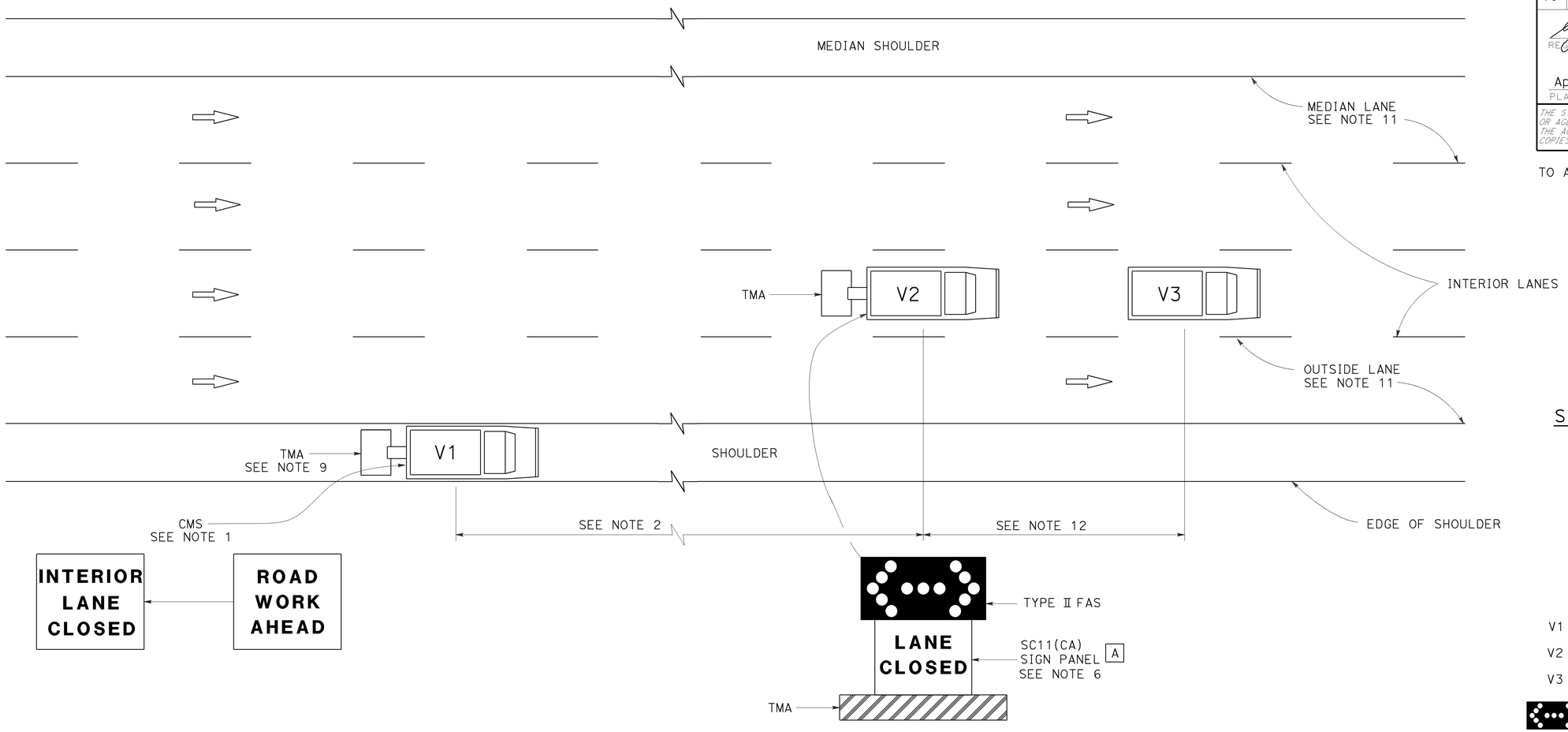

SIGN PANEL SIZE (Min)

A 54" x 42"

LEGEND

V1	SIGN VEHICLE
V2	SHADOW VEHICLE
V3	WORK/APPLICATION VEHICLE
	FLASHING ARROW SIGN (FAS) IN FLASHING DOUBLE ARROW MODE
CMS	CHANGEABLE MESSAGE SIGN
TMA	TRUCK-MOUNTED ATTENUATOR

MOVING LANE CLOSURE ON INTERIOR LANE OF MULTILANE HIGHWAYS

NOTES:

1. A changeable message sign shall be mounted on the rear of sign vehicle V1. The changeable message sign shall be sequenced to show the "ROAD WORK AHEAD" message first, followed by the "INTERIOR LANE CLOSED" message. The message "CENTER LANE CLOSED" may be used in place of the "INTERIOR LANE CLOSED" message.
2. If traffic queues develop, sign vehicle V1 should be positioned upstream from the end of queue. Sign vehicle V1 shall be positioned where highly visible when shoulders are not available.
3. A minimum sight distance of 1500′ should be provided in advance of sign vehicle V1.
4. Sign vehicle V1 should remain at the beginning of horizontal or vertical curves until the other vehicles (V2 and V3) are far enough beyond the curve to resume the minimum sight distance of 1500′.
5. Vehicle-mounted sign panels shall have Type III or above retroreflective sheeting, black on white, or black on fluorescent orange, with 6" minimum series D letters per Caltrans sign specifications.
6. Shadow vehicle V2 shall be equipped with a truck-mounted attenuator. The sign panel shown and a Type II flashing arrow sign shall be mounted on the rear of shadow vehicle V2.
7. All vehicles used for lane closures shall be equipped with two-way radios, and the vehicle operators shall maintain communication during the work or application operation.
8. All vehicles shall be equipped with flashing or rotating amber lights.
9. If sign vehicle V1 encroaches into the traffic lane due to insufficient shoulder width, sign vehicle V1 shall be equipped with a truck-mounted attenuator. Sign vehicle V1 shall stay as close to the edge of shoulder as practicable.
10. Where workers would be on foot in the work area, a stationary type lane closure (Revised Standard Plan T10, T11 etc., as applicable) shall be used instead of this plan.
11. For moving lane closure on median lane or outside lane of multilane highways, use Revised Standard Plan T15.
12. The spacing between work vehicle(s) and the shadow vehicles, and between each shadow vehicle should be minimized to deter road users from driving in between.

STATE OF CALIFORNIA
DEPARTMENT OF TRANSPORTATION

TRAFFIC CONTROL SYSTEM FOR MOVING LANE CLOSURE ON MULTILANE HIGHWAYS

NO SCALE

RSP T16 DATED APRIL 19, 2013 SUPERSEDES STANDARD PLAN T16
DATED MAY 20, 2011 - PAGE 244 OF THE STANDARD PLANS BOOK DATED 2010.

REVISED STANDARD PLAN RSP T16

12-18-12

Dist	COUNTY	ROUTE	POST MILES TOTAL PROJECT	SHEET No.	TOTAL SHEETS
10	SJ	99	0.0/5.7	108	116

Theresa Gabriel
REGISTERED ELECTRICAL ENGINEER

October 30, 2015
PLANS APPROVAL DATE

REGISTERED PROFESSIONAL ENGINEER Theresa Aziz Gabriel No. E15129 Exp. 6-30-16 ELECTRICAL STATE OF CALIFORNIA

THE STATE OF CALIFORNIA OR ITS OFFICERS OR AGENTS SHALL NOT BE RESPONSIBLE FOR THE ACCURACY OR COMPLETENESS OF SCANNED COPIES OF THIS PLAN SHEET.

TO ACCOMPANY PLANS DATED 5-2-16

LEGEND:

AB	ABANDON. IF APPLIED TO CONDUIT, REMOVE CONDUCTORS
BC	INSTALL PULL BOX IN EXISTING CONDUIT RUN
BP	PEDESTRIAN BARRICADE, TYPE AS INDICATED ON PLAN
CB	INSTALL CONDUIT INTO EXISTING PULL BOX
CC	CONNECT NEW AND EXISTING CONDUIT. REMOVE EXISTING CONDUCTORS AND INSTALL CONDUCTORS AS INDICATED
CF	CONDUIT TO REMAIN FOR FUTURE USE. REMOVE CONDUCTORS. INSTALL PULL TAPE
DH	DETECTOR HANDHOLE
FA	FOUNDATION TO BE ABANDONED
IS	INSTALL SIGN ON SIGNAL MAST ARM
NS	NO SLIP BASE ON STANDARD
PEC	PHOTOELECTRIC CONTROL
PEU	PHOTOELECTRIC UNIT
RC	EQUIPMENT OR MATERIAL TO BE REMOVED AND BECOME THE PROPERTY OF THE CONTRACTOR
RE	REMOVE ELECTROLIER, FUSES AND BALLAST. TAPE ENDS OF CONDUCTORS
RL	RELOCATE EQUIPMENT
RR	REMOVE AND REUSE EQUIPMENT
RS	REMOVE AND SALVAGE EQUIPMENT
SC	SPLICE NEW TO EXISTING CONDUCTORS
SD	SERVICE DISCONNECT
TSP	TELEPHONE SERVICE POINT

ABBREVIATIONS

AC+	UNDERGROUNDED CONDUCTOR
APS	ACCESSIBLE PEDESTRIAN SIGNAL
Batt	BATTERY
BBS	BATTERY BACKUP SYSTEM
BC	BOLT CIRCLE
Blk	BLACK
BP	BYPASS
BPB	BICYCLE PUSH BUTTON
C	CONDUIT
CB	CIRCUIT BREAKER
CCTV	CLOSED CIRCUIT TELEVISION
Ckt	CIRCUIT
CMS	CHANGEABLE MESSAGE SIGN
Ctid	CALTRANS IDENTIFICATION
Comm	COMMUNICATION
Cntl	CONTROL
DF	DEPARTMENT-FURNISHED
DLC	LOOP DETECTOR LEAD-IN CABLE
EMS	EXTINGUISHABLE MESSAGE SIGN
EVUC	EMERGENCY VEHICLE UNIT CABLE
EVUD	EMERGENCY VEHICLE UNIT DETECTOR
FB	FLASHING BEACON
FBCA	FLASHING BEACON CONTROL ASSEMBLY
FBS	FLASHING BEACON WITH SLIP BASE
FO	FIBER OPTIC
G	EQUIPMENT GROUNDING CONDUCTOR
GB	GROUND BUS
GFCI	GROUND FAULT CIRCUIT INTERRUPTER
Grn	GREEN
HAR	HIGHWAY ADVISORY RADIO
Hex	HEXAGONAL
HPS	HIGH PRESSURE SODIUM
IISNS	INTERNALLY ILLUMINATED STREET NAME SIGN
ISL	INDUCTION SIGN LIGHTING
LED	LIGHT EMITTING DIODE
LMA	LUMINAIRE MAST ARM
LPS	LOW PRESSURE SODIUM
Ltg	LIGHTING
Lum	LUMINAIRE
M	METERED
MAT	MAST ARM MOUNTING TOP ATTACHMENT
MAS	MAST ARM MOUNTING SIDE ATTACHMENT
MBPS	MANUAL BYPASS SWITCH
M/M	MULTIPLE TO MULTIPLE TRANSFORMER
Mtg	MOUNTING
MV	MERCURY VAPOR LIGHTING FIXTURE
MVDS	MICROWAVE VEHICLE DETECTION SYSTEM
N	NEUTRAL (GROUNDED CONDUCTOR)
NB	NEUTRAL BUS
NC	NORMALLY CLOSE
NO	NORMALLY OPEN
P	CIRCUIT BREAKER'S POLE
PB	PULL BOX
PBA	PUSH BUTTON ASSEMBLY
PEC	PHOTOELECTRIC CONTROL
Ped	PEDESTRIAN
PEU	PHOTOELECTRIC UNIT
PT	CONDUIT WITH PULL TAPE
PTR	POWER TRANSFER RELAY
RE	RELOCATED EQUIPMENT
RM	RAMP METERING
RWIS	ROADSIDE WEATHER INFORMATION SYSTEM
SB	SLIP BASE
SIC	SIGNAL INTERCONNECT CABLE
Sig	SIGNAL
SMA	SIGNAL MAST ARM
SNS	STREET NAME SIGN
SP	SERVICE POINT
TB	TERMINAL BOARD
TDC	TELEPHONE DEMARCATION CABINET
Temp	TEMPERATURE
TMS	TRAFFIC MONITORING STATION
TOS	TRAFFIC OPERATIONS SYSTEM
UPS	UNINTERRUPTABLE POWER SUPPLY
UPSC	UNINTERRUPTABLE POWER SUPPLY CONTROLLER
Veh	VEHICLE
VIVDS	VIDEO IMAGE VEHICLE DETECTION SYSTEM
Wht	WHITE
WIM	WEIGH-IN-MOTION
Xfmr	TRANSFORMER

SOFFIT AND WALL-MOUNTED LUMINAIRES

PENDANT SOFFIT LUMINAIRE, 70 W HPS UNLESS OTHERWISE SPECIFIED

FLUSH-MOUNTED SOFFIT LUMINAIRE, 70 W HPS UNLESS OTHERWISE SPECIFIED

WALL-MOUNTED LUMINAIRE, 70 W HPS UNLESS OTHERWISE SPECIFIED

EXISTING SOFFIT OR WALL-MOUNTED LUMINAIRE TO REMAIN UNMODIFIED

EXISTING SOFFIT OR WALL-MOUNTED LUMINAIRE TO BE MODIFIED AS SPECIFIED

NOTE:
Arrow indicates "street side" of luminaire.

COMMONLY USED SYMBOLS FOR UNITED STATES CUSTOMARY UNITS OF MEASUREMENT:

SYMBOL	DEFINITIONS
Ω	OHMS
min	MINUTE
s	SECOND
bps	BITS PER SECOND
Bps	BYTES PER SECOND
A	AMPERE
V	VOLT
V(dc)	VOLT (DIRECT CURRENT)
V(ac)	VOLT (ALTERNATING CURRENT)
FC	FOOT - CANDLE
W	WATTS
VA	VOLT-AMPERE
M	MEGA
k	KILO
m	MILLI
μ	MICRO
P	PICO
Hz	HERTZ

MISCELLANEOUS ELECTROLIERS

NEW	EXISTING	
		LUMINAIRE ON WOOD POLE
		NON-STANDARD ELECTROLIER (SEE PROJECT LEGEND)
		CITY ELECTROLIER
		ELECTROLIER FOUNDATION (FUTURE INSTALLATION)

NOTES:

1. LED luminaires shall be 235 W when installed on Type 21, 21D, 30, 31 and 32 Standards, unless otherwise specified. LED luminaires shall be 165 W when installed on other type standards or poles, unless otherwise specified.
2. Luminaires shall be the cutoff type, ANSI Type III medium cutoff lighting distribution, unless otherwise specified.

STANDARD ELECTROLIER

NEW	EXISTING	STANDARD TYPE
		15
		15D
		15 STRUCTURE
		15D STRUCTURE
		21
		21D
		21 STRUCTURE
		21D STRUCTURE
		30
		31
		32

STATE OF CALIFORNIA
DEPARTMENT OF TRANSPORTATION

ELECTRICAL SYSTEMS (LEGEND AND ABBREVIATIONS)

NO SCALE

RSP ES-1A DATED OCTOBER 30, 2015 SUPERSEDES RSP ES-1A DATED JULY 19, 2013 AND STANDARD PLAN ES-1A DATED MAY 20, 2011 - PAGE 425 OF THE STANDARD PLANS BOOK DATED 2010.

REVISED STANDARD PLAN RSP ES-1A

2010 REVISED STANDARD PLAN RSP ES-1A

9-29-15

Dist	COUNTY	ROUTE	POST MILES TOTAL PROJECT	SHEET No.	TOTAL SHEETS
10	SJ	99	0.0/5.7	109	116

Theresa Gabriel
REGISTERED ELECTRICAL ENGINEER

October 30, 2015
PLANS APPROVAL DATE

REGISTERED PROFESSIONAL ENGINEER
Theresa Aziz Gabriel
No. E15129
Exp. 6-30-16
ELECTRICAL
STATE OF CALIFORNIA

THE STATE OF CALIFORNIA OR ITS OFFICERS OR AGENTS SHALL NOT BE RESPONSIBLE FOR THE ACCURACY OR COMPLETENESS OF SCANNED COPIES OF THIS PLAN SHEET.

TO ACCOMPANY PLANS DATED 5-2-16

CONDUIT

NEW	EXISTING	
		LIGHTING CONDUIT, UNLESS OTHERWISE INDICATED OR NOTED
		TRAFFIC SIGNAL CONDUIT
C	c	COMMUNICATION CONDUIT
T	t	TELEPHONE CONDUIT
F	f	FIRE ALARM CONDUIT
FO	fo	FIBER OPTIC CONDUIT
		CONDUIT TERMINATION
R	r	CONDUIT RISER ATTACHED TO THE STRUCTURE OR SERVICE POLE

SERVICE EQUIPMENT

NEW	EXISTING	
OH	oh	OVERHEAD LINES
U	U	WOOD POLE, "U" INDICATES UTILITY OWNED
		POLE GUY WITH ANCHOR
		UTILITY TRANSFORMER - GROUND MOUNTED
III	III	SERVICE EQUIPMENT ENCLOSURE TYPE. DOOR INDICATES FRONT OF ENCLOSURE
T	t	TELEPHONE DEMARCATION CABINET

POLE-MOUNTED SERVICE DESIGNATION

TYPE H SERVICE, 28'-10" — TYPE OF INSTALLATION AND POLE HEIGHT ABOVE GRADE

FLASHING BEACON

NEW	EXISTING	
R	R	FLASHING BEACON (ONE VEHICLE SIGNAL HEAD WITH BACKPLATE AND VISOR) "R" INDICATES RED INDICATION, "Y" INDICATES YELLOW INDICATION
Y Y	Y Y	FLASHING BEACON WITH TYPE 15-FBS STANDARD AND A SIGN.
R R	R R	FLASHING BEACON WITH TYPES 9, 9A OR 9B SIGN UNLESS OTHERWISE SPECIFIED OR INDICATED

SIGNAL EQUIPMENT

NEW	EXISTING	
		PEDESTRIAN SIGNAL HEAD
		PUSH BUTTON ASSEMBLY POST
		PEDESTRIAN BARRICADE
		VEHICLE SIGNAL HEAD (WITH BACKPLATE AND 3-SECTIONS: RED, YELLOW AND GREEN)
		VEHICLE SIGNAL HEAD WITH ANGLE VISOR
PV	PV	MODIFICATIONS OF BASIC SYMBOL: "L" INDICATES ALL NON-ARROW SECTIONS LOUVERED "LG" INDICATES LOUVERED GREEN SECTION ONLY "PV" INDICATES ALL 12" SECTIONS PROGRAMMED VISIBILITY "8" INDICATES ALL 8" SECTIONS (ONLY WHEN SPECIFIED)
		VEHICLE SIGNAL HEAD CONSISTING OF RED, YELLOW AND GREEN LEFT ARROW SECTIONS
		VEHICLE SIGNAL HEAD CONSISTING OF RED AND YELLOW SECTIONS WITH AN UP GREEN ARROW SECTION
		VEHICLE SIGNAL HEAD (5 SECTION) CONSISTING OF RED, YELLOW AND GREEN SECTIONS WITH YELLOW AND GREEN RIGHT ARROW SECTIONS
		TYPE 15TS STANDARD WITH VEHICLE SIGNAL HEAD AND LUMINAIRE
		TYPE 21TS STANDARD WITH VEHICLE SIGNAL HEAD AND LUMINAIRE
		STANDARD WITH LUMINAIRE AND SIGNAL MAST ARMS AND ATTACHED VEHICLE SIGNAL HEADS
		TYPE 1 STANDARD WITH ATTACHED VEHICLE SIGNAL HEADS
		STANDARD WITH A SIGNAL MAST ARM, ATTACHED VEHICLE SIGNAL HEADS AND INTERNALLY ILLUMINATED STREET NAME SIGN
		CONTROLLER ASSEMBLY. DOOR INDICATES FRONT OF CABINET

SIGNAL EQUIPMENT Cont

NEW	EXISTING	
		GUARD POST
		TYPE 1 STANDARD WITH RAMP METERING SIGN
		OPTICAL DETECTOR FOR THE EMERGENCY VEHICLE DETECTION

NOTES:

1. All signal sections shall be 12" unless shown otherwise.
2. Signal heads shall be provided with backplates unless shown otherwise.

ILLUMINATED OVERHEAD SIGN

NEW	EXISTING	
		SINGLE POST, SINGLE ILLUMINATED SIGN, BALANCED BUTTERFLY
		SINGLE POST, DOUBLE ILLUMINATED SIGN, BALANCED BUTTERFLY
		SINGLE POST, SINGLE ILLUMINATED SIGN, FULL CANTILEVER
		DOUBLE POST, SINGLE ILLUMINATED SIGN
		SINGLE ILLUMINATED SIGN MOUNTED ON STRUCTURE
		DOUBLE POST, SINGLE ILLUMINATED SIGN WITH ELECTROLIER

STATE OF CALIFORNIA
DEPARTMENT OF TRANSPORTATION

ELECTRICAL SYSTEMS (LEGEND AND ABBREVIATIONS)

NO SCALE

RSP ES-1B DATED OCTOBER 30, 2015 SUPERSEDES RSP ES-1B DATED JULY 19, 2013 AND STANDARD PLAN ES-1B DATED MAY 20, 2011 - PAGE 426 OF THE STANDARD PLANS BOOK DATED 2010.

REVISED STANDARD PLAN RSP ES-1B

2010 REVISED STANDARD PLAN RSP ES-1B

8-19-15

Dist	COUNTY	ROUTE	POST MILES TOTAL PROJECT	SHEET No.	TOTAL SHEETS
10	SJ	99	0.0/5.7	110	116

Theresa Gabriel
REGISTERED ELECTRICAL ENGINEER

April 15, 2016
PLANS APPROVAL DATE

REGISTERED PROFESSIONAL ENGINEER
Theresa Aziz Gabriel
No. E15129
Exp. 6-30-16
ELECTRICAL
STATE OF CALIFORNIA

THE STATE OF CALIFORNIA OR ITS OFFICERS OR AGENTS SHALL NOT BE RESPONSIBLE FOR THE ACCURACY OR COMPLETENESS OF SCANNED COPIES OF THIS PLAN SHEET.

TO ACCOMPANY PLANS DATED 5-2-16

EQUIPMENT IDENTIFICATION

ILLUMINATED SIGN IDENTIFICATION:

SIGN No. 12345
10 ISL SCI 1.0

- SIGN EQUIPMENT IDENTIFICATION CHARACTERS - PLACE ON POST OR STRUCTURE
- TRANSFORMER RATING (kVA)
- LIGHTING CONTROL TYPE
- NUMBER AND TYPE OF FIXTURES

DO NOT PLACE ON STANDARD OR STRUCTURE

ELECTROLIER OR EQUIPMENT IDENTIFICATION:

L2745 - 15'-0"

- MAST ARM LENGTH, IF SHOWN. DO NOT PLACE ON STANDARD OR STRUCTURE
- EQUIPMENT IDENTIFICATION CHARACTERS - PLACE ON STANDARD OR STRUCTURE. EXISTING EQUIPMENT IDENTIFICATION CHARACTERS ARE SHOWN IN PARENTHESIS

CONDUIT AND CONDUCTOR IDENTIFICATION:

1½"C, 2#10, 15#14, 2 DLC, 12P#18 (PAIR)

- NUMBER AND SIZE OF CONDUCTORS AND CABLES
- SIZE OF CONDUIT IN INCHES

ø1, ø2, ø2P, etc.	TRAFFIC PHASE IDENTIFICATION FOR SIGNALS, DETECTORS AND PHASE DIAGRAMS
1 2 3	LEGEND NUMBERS
A B C	EQUIPMENT, SIGNAL POLES, INSTALLATION OR ITEMS
1 2 3	CONDUIT RUN NUMBERS

SIGNAL AND LIGHTING STANDARD (TYPICAL DESIGNATION):

19A - 3 - 100

- WIND VELOCITY = 100 mph
- CASE 3 ARM LOADING
- STANDARD TYPE
- STANDARD PLAN SHEET NUMBER
- DETAIL, NUMBER, SECTION, TYPE OR ELEVATION

MISCELLANEOUS EQUIPMENT

NEW	EXISTING	
CMS	cms	CHANGEABLE MESSAGE SIGN
		CLOSED CIRCUIT TELEVISION CAMERA
		HIGHWAY ADVISORY RADIO POLE AND ANTENNA
EMS	ems	LED EXTINGUISHABLE MESSAGE SIGN
M V	m v	DETECTION DEVICE M = MICROWAVE SENSOR V = VIDEO IMAGE SENSOR

WIRING DIAGRAM LEGEND

- EXTERNAL CONDUCTOR
- CONDUCTOR OR BUS
- TIE POINT
- CONTACTOR COIL
- CONTACTOR, NO CONTACT
- TERMINAL BLOCKS
- CONTACTOR, NC CONTACT
- ENCLOSURE BOND
- GROUNDING ELECTRODE
- CIRCUIT BREAKER
- RECEPTACLE

PULL BOXES

NEW	EXISTING	
		PULL BOX, No. 5 UNLESS OTHERWISE INDICATED OR NOTED
3	9A(21)	PULL BOX, ADDITIONAL DESIGNATIONS OR DESCRIPTIONS

3 No. 3½ PULL BOX
5 No. 5 PULL BOX
6 No. 6 PULL BOX
7 No. 7 PULL BOX (CEILING)
8 No. 8 PULL BOX
9 No. 9 PULL BOX (STRUCTURE)
9A No. 9A PULL BOX (STRUCTURE)

(C) COMMUNICATIONS PULL BOX
(E) PULL BOX WITH EXTENSION
(S) SPRINKLER CONTROL PULL BOX
(21) ANCHOR BOLTS AND CONDUIT FOR FUTURE INSTALLATION OF TYPE 21 STANDARD
(T) TRAFFIC PULL BOX

VEHICLE DETECTORS

5 J 9 U

- VEHICLE DETECTOR DESIGNATION
- U = UPPER
  L = LOWER
- SLOT NUMBER IN INPUT FILE
- INPUT FILE (I OR J)
- PHASE

NEW	EXISTING	
		TYPE A LOOP DETECTOR. OUTLINE OF SAW CUT SHOWN
		TYPE B LOOP DETECTOR. OUTLINE OF SAW CUT SHOWN
		TYPE C LOOP DETECTOR. OUTLINE OF SAW CUT SHOWN
		TYPE D LOOP DETECTOR. OUTLINE OF SAW CUT SHOWN
		TYPE E LOOP DETECTOR. OUTLINE OF SAW CUT SHOWN
		TYPE Q LOOP DETECTOR. OUTLINE OF SAW CUT SHOWN
DH	dh	DETECTOR HANDHOLE
		MICROWAVE OR VIDEO DETECTION ZONE

STATE OF CALIFORNIA
DEPARTMENT OF TRANSPORTATION

ELECTRICAL SYSTEMS (LEGEND AND ABBREVIATIONS)

NO SCALE

RSP ES-1C DATED APRIL 15, 2016 SUPERSEDES STANDARD PLAN ES-1C DATED OCTOBER 30, 2015 - PAGE 420 OF THE STANDARD PLANS BOOK DATED 2015.

REVISED STANDARD PLAN RSP ES-1C

2015 REVISED STANDARD PLAN RSP ES-1C

1-22-16

Dist	COUNTY	ROUTE	POST MILES TOTAL PROJECT	SHEET No.	TOTAL SHEETS
10	SJ	99	0.0/5.7	111	116

REGISTERED ELECTRICAL ENGINEER

April 15, 2016
PLANS APPROVAL DATE

REGISTERED PROFESSIONAL ENGINEER Theresa Aziz Gabriel No. E15129 Exp. 6-30-16 ELECTRICAL STATE OF CALIFORNIA

THE STATE OF CALIFORNIA OR ITS OFFICERS OR AGENTS SHALL NOT BE RESPONSIBLE FOR THE ACCURACY OR COMPLETENESS OF SCANNED COPIES OF THIS PLAN SHEET.

TO ACCOMPANY PLANS DATED 5-2-16

2015 REVISED STANDARD PLAN RSP ES-3C

NOTES:

1. Controller units, plug-mounted equipment, shelf-mounted equipment and wall-mounted equipment shall be located to permit safe and easy removal or replacement without removing any other piece of equipment.
2. Cabinet fan may be installed at an alternate location near the top of the cabinet when approved by the Engineer.
3. Where telephone interconnect is required, a minimum of 5" clear vertical space shall be provided inside the cabinet for the equipment.
4. Telephone interconnect conductors shall be enclosed in a ¾"C or larger conduit through the foundation. Type 4 conduit shall be used to separate telephone and power conductors in cabinets.

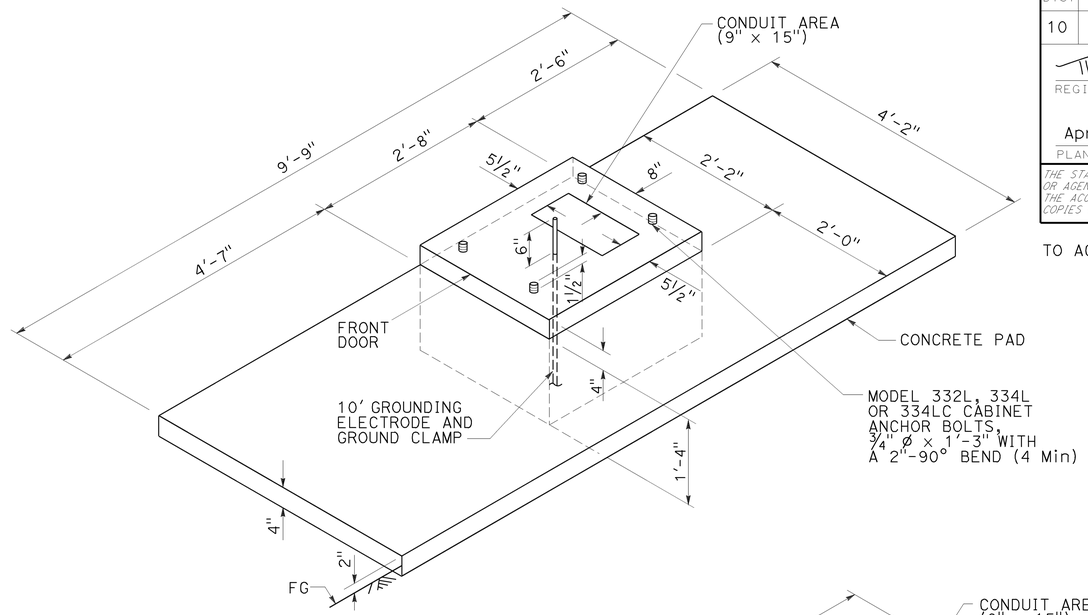

FOUNDATION AND PAD DETAIL

Model 332L, 334L and 334LC

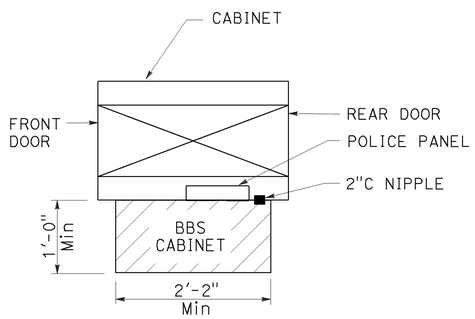

TOP VIEW

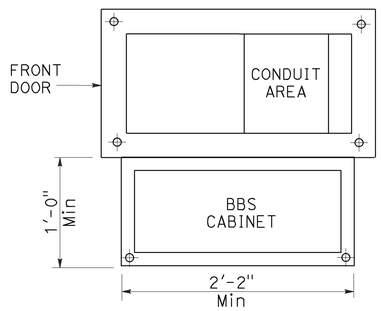

BASE PLAN FOR BBS MOUNTED TO THE MODEL 332L CABINET

(FOR DIMENSIONS AND DETAILS NOT SHOWN, SEE CABINET HOUSING DETAILS OF THE TRANSPORTATION ELECTRICAL EQUIPMENT SPECIFICATION (TEES))

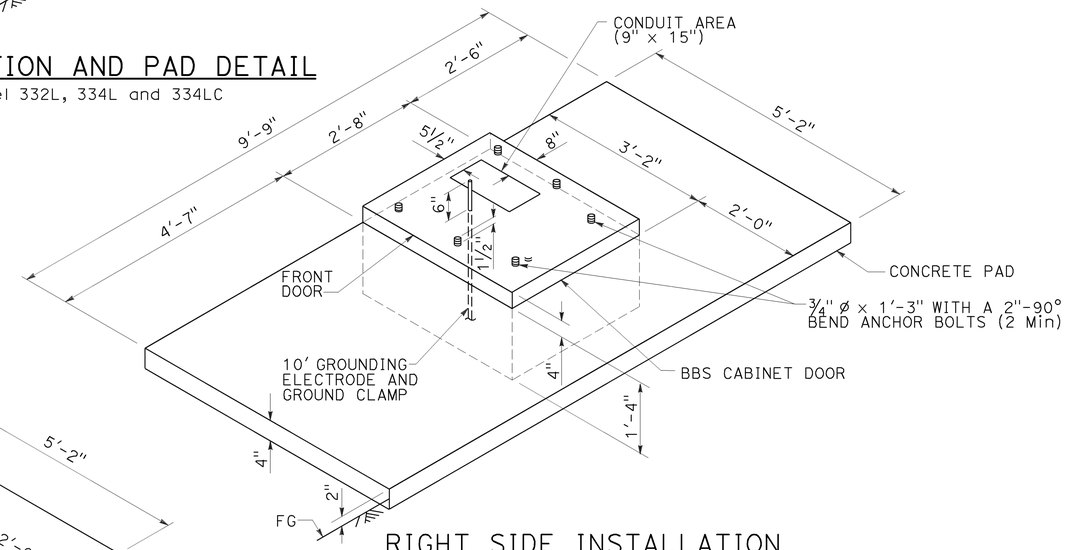

RIGHT SIDE INSTALLATION

DETAIL B

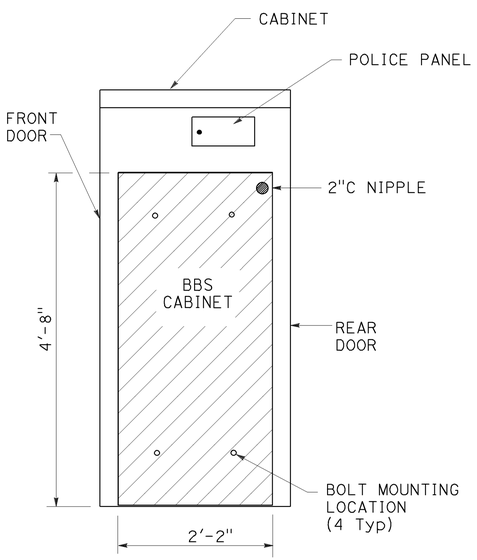

SIDE VIEW

BBS CABINET MOUNTED TO THE MODEL 332L CABINET

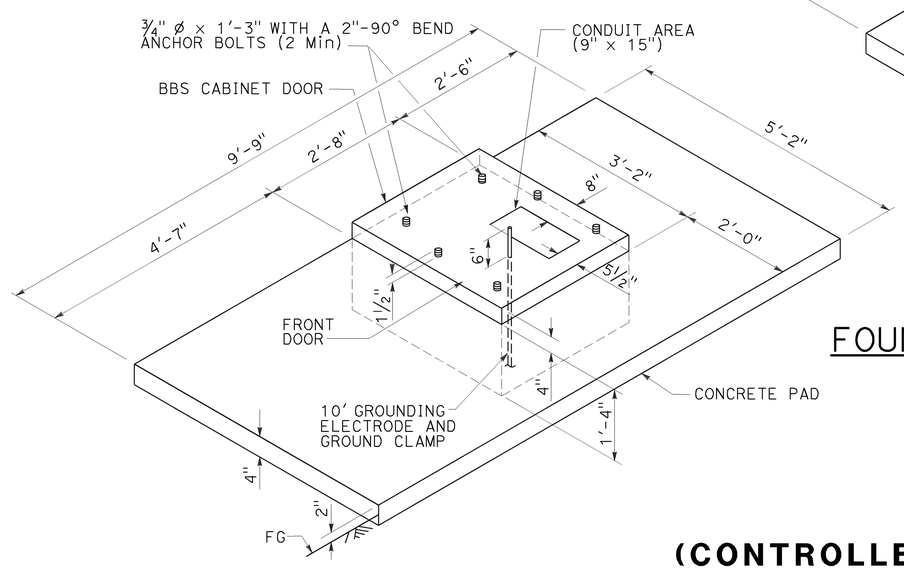

LEFT SIDE INSTALLATION

DETAIL A

MODIFIED MODEL 332L CABINET

FOUNDATION DETAIL FOR BATTERY BACKUP SYSTEM

STATE OF CALIFORNIA
DEPARTMENT OF TRANSPORTATION

ELECTRICAL SYSTEMS

(CONTROLLER CABINET FOUNDATION AND PAD DETAILS)

NO SCALE

RSP ES-3C DATED APRIL 15, 2016 SUPERSEDES STANDARD PLAN ES-3C DATED OCTOBER 30, 2015 - PAGE 430 OF THE STANDARD PLANS BOOK DATED 2015.

REVISED STANDARD PLAN RSP ES-3C

1-12-16

Dist	COUNTY	ROUTE	POST MILES TOTAL PROJECT	SHEET No.	TOTAL SHEETS
10	SJ	99	0.0/5.7	112	116

Theresa Gabriel
REGISTERED ELECTRICAL ENGINEER

April 15, 2016
PLANS APPROVAL DATE

REGISTERED PROFESSIONAL ENGINEER
Theresa Aziz Gabriel
No. E15129
Exp. 6-30-16
ELECTRICAL
STATE OF CALIFORNIA

THE STATE OF CALIFORNIA OR ITS OFFICERS OR AGENTS SHALL NOT BE RESPONSIBLE FOR THE ACCURACY OR COMPLETENESS OF SCANNED COPIES OF THIS PLAN SHEET.

TO ACCOMPANY PLANS DATED 5-2-16

2015 REVISED STANDARD PLAN RSP ES-5A

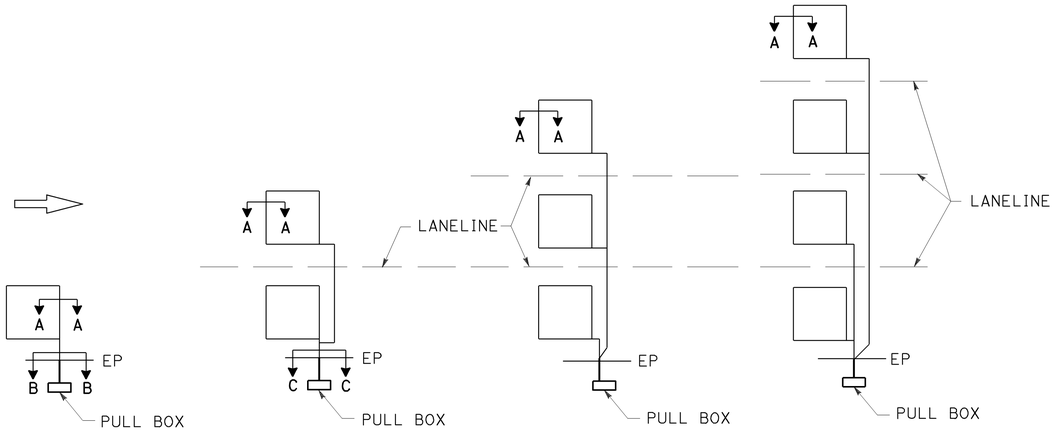

SAW CUT DETAILS

Type A loop detector configurations illustrated

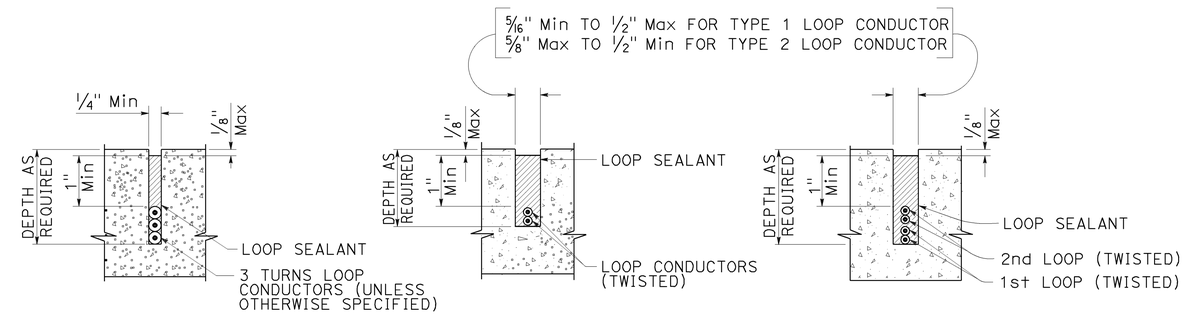

SECTION A-A SECTION B-B SECTION C-C

SLOT DETAILS - TYPE 1 AND TYPE 2 LOOP CONDUCTOR

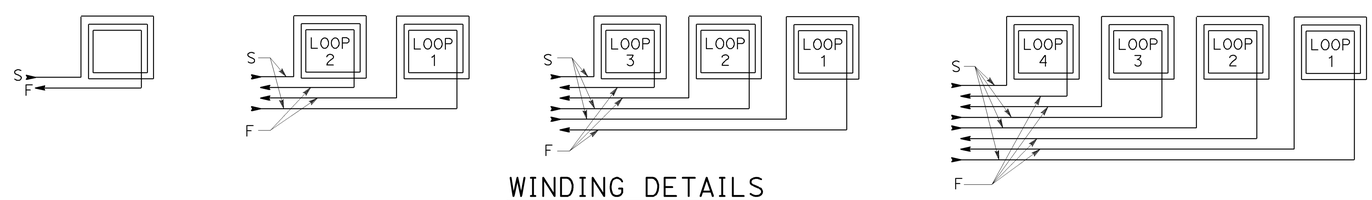

WINDING DETAILS

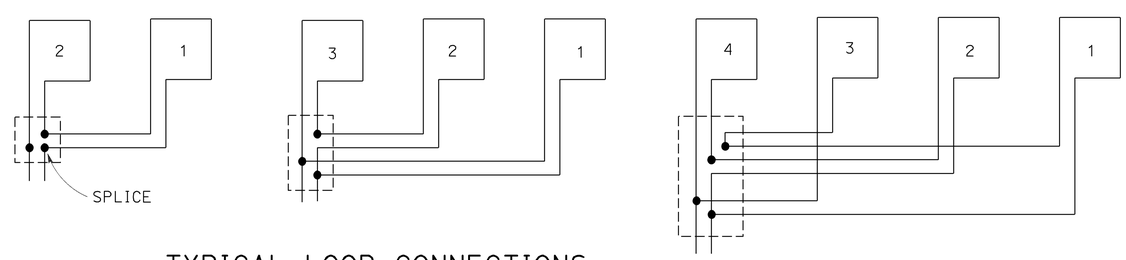

TYPICAL LOOP CONNECTIONS

Dashed lines represent the pull box

ABBREVIATIONS:

S - START
F - FINISH

STATE OF CALIFORNIA
DEPARTMENT OF TRANSPORTATION

ELECTRICAL SYSTEMS (LOOP DETECTORS)

NO SCALE

RSP ES-5A DATED APRIL 15, 2016 SUPERSEDES STANDARD PLAN ES-5A
DATED OCTOBER 30, 2015 - PAGE 445 OF THE STANDARD PLANS BOOK DATED 2015.

REVISED STANDARD PLAN RSP ES-5A

Dist	COUNTY	ROUTE	POST MILES TOTAL PROJECT	SHEET No.	TOTAL SHEETS
10	SJ	99	0.0/5.7	113	116

Theresa Gabriel
REGISTERED ELECTRICAL ENGINEER

April 15, 2016
PLANS APPROVAL DATE

REGISTERED PROFESSIONAL ENGINEER Theresa Aziz Gabriel No. E15129 Exp. 6-30-16 ELECTRICAL STATE OF CALIFORNIA

THE STATE OF CALIFORNIA OR ITS OFFICERS OR AGENTS SHALL NOT BE RESPONSIBLE FOR THE ACCURACY OR COMPLETENESS OF SCANNED COPIES OF THIS PLAN SHEET.

TO ACCOMPANY PLANS DATED 5-2-16

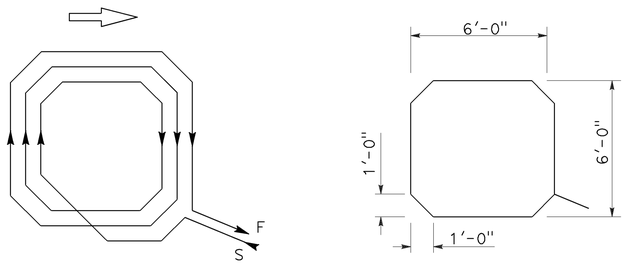

WINDING DETAIL SAW CUT DETAIL

TYPE A LOOP DETECTOR CONFIGURATION

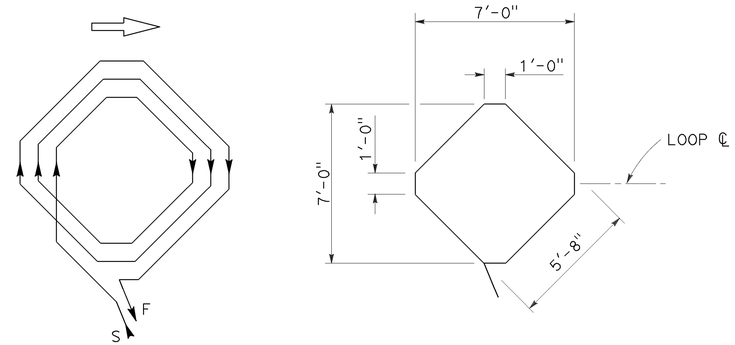

WINDING DETAIL SAW CUT DETAIL

TYPE B LOOP DETECTOR CONFIGURATION

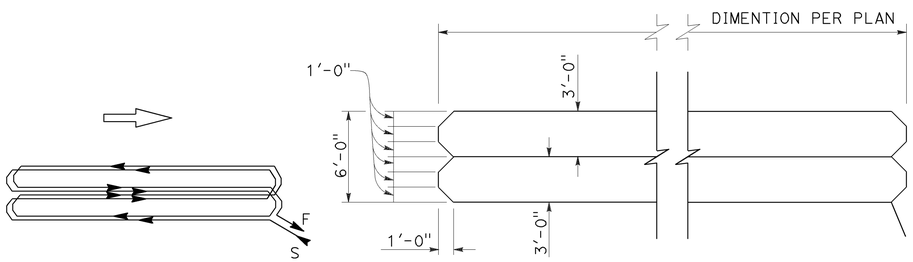

WINDING DETAIL SAW CUT DETAIL

TYPE C LOOP DETECTOR CONFIGURATION

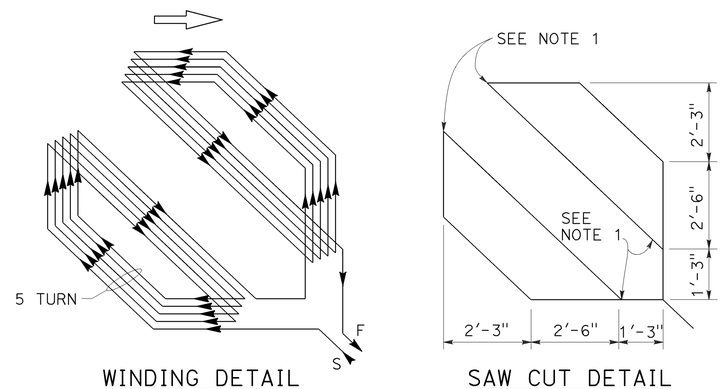

WINDING DETAIL SAW CUT DETAIL

TYPE D LOOP DETECTOR CONFIGURATION

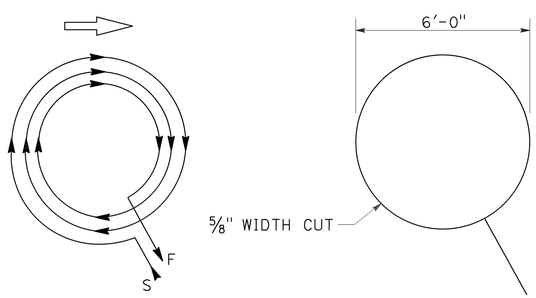

WINDING DETAIL SAW CUT DETAIL

TYPE E LOOP DETECTOR CONFIGURATION

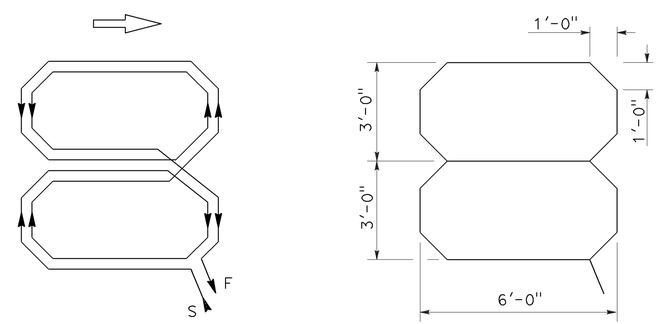

WINDING DETAIL SAW CUT DETAIL

TYPE Q LOOP DETECTOR CONFIGURATION

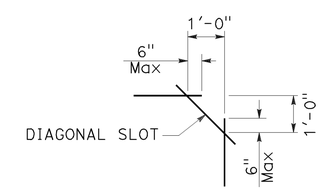

PLAN VIEW OF DIAGONAL SLOT AT CORNERS

NOTES:

1. Round corners of acute angle saw cuts to prevent damage to conductors.
2. Typical distance separating loops from edge to edge is 10' for Type A, B, D and E installation in single lane.
3. Use Type D loops for limit line detection and bicycle lanes.

STATE OF CALIFORNIA
DEPARTMENT OF TRANSPORTATION

ELECTRICAL SYSTEMS (DETECTORS)

NO SCALE

RSP ES-5B DATED APRIL 15, 2016 SUPERSEDES STANDARD PLAN ES-5B DATED OCTOBER 30, 2015 - PAGE 446 OF THE STANDARD PLANS BOOK DATED 2015.

REVISED STANDARD PLAN RSP ES-5B

2015 REVISED STANDARD PLAN RSP ES-5B

1-22-16

Dist	COUNTY	ROUTE	POST MILES TOTAL PROJECT	SHEET No.	TOTAL SHEETS
10	SJ	99	0.0/5.7	114	116

Theresa Gabriel
REGISTERED ELECTRICAL ENGINEER

April 15, 2016
PLANS APPROVAL DATE

REGISTERED PROFESSIONAL ENGINEER Theresa Aziz Gabriel No. E15129 Exp. 6-30-16 ELECTRICAL STATE OF CALIFORNIA

THE STATE OF CALIFORNIA OR ITS OFFICERS OR AGENTS SHALL NOT BE RESPONSIBLE FOR THE ACCURACY OR COMPLETENESS OF SCANNED COPIES OF THIS PLAN SHEET.

TO ACCOMPANY PLANS DATED 5-2-16

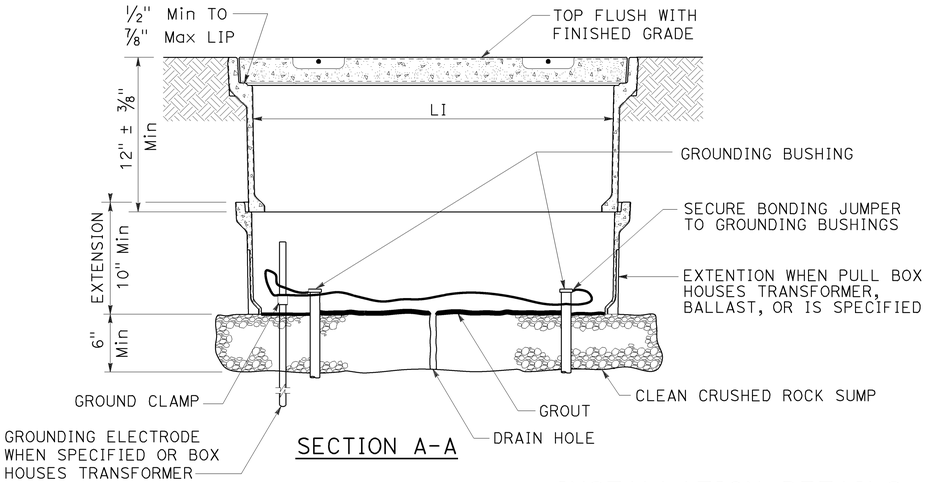

SECTION A-A

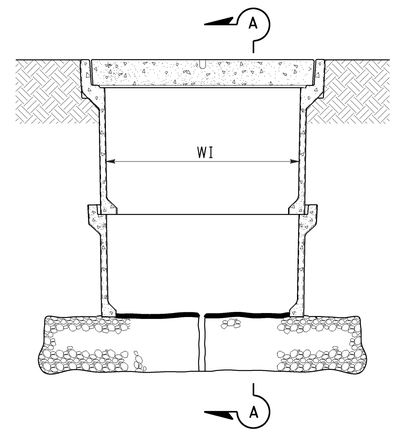

SIDE VIEW

INSTALLATION DETAILS

DETAIL A

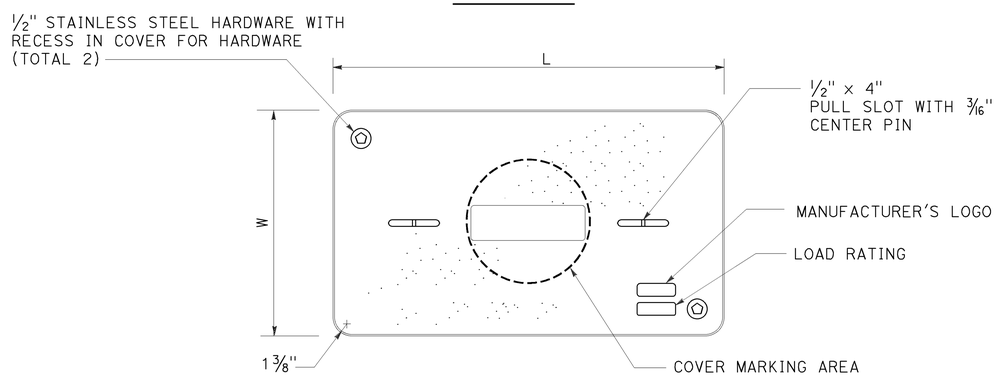

COVER TOP VIEW

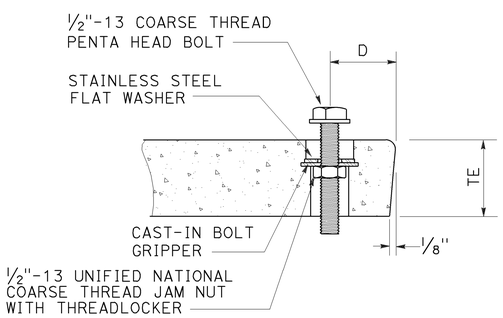

TYPICAL COVER CAPTIVE BOLT

OR SIMILAR

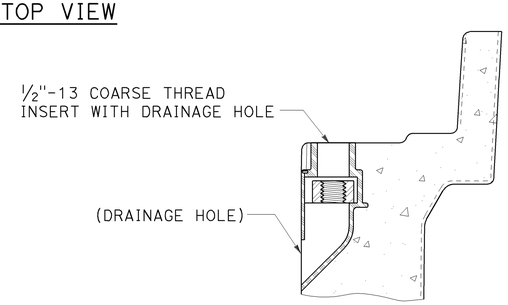

TYPICAL THREADED INSERT

OR SIMILAR

DIMENSION TABLE										
PULL BOX	PULL BOX					COVER				
	MINIMUM DEPTH BOX	MINIMUM DEPTH EXTENSION	MINIMUM WEIGHT	LI Min	WI Min	TE	D	L	W	MINIMUM WEIGHT
No. 3 1/2	12"	N/A	40 lb	1' - 3"	9"	1 3/4"	1 3/4"	1'-3 1/4" - 1'-3 3/8"	10" - 10 1/8"	30 lb
No. 5	12"	10"	55 lb	1' - 8"	11"	2"	1 3/4"	1'-11 1/4"	1'-1 3/4"	60 lb
No. 6	12"	10"	70 lb	2' - 4 1/4"	1' - 3 1/4"	2"	2"	2'-6 1/2"	1'-5 1/2"	85 lb

NOTES:

1. The nominal dimensions of the opening in which the cover sets shall be the same as the cover dimensions except the length and width dimensions shall be 1/8" greater.
2. Covers and boxes shall be interchangeable with California standard male and female gages. When interchanged with a standard male or female gage, the top surfaces shall be flush within 1/8". Top outside radius of covers and pull boxes shall have a 1/8" radius.
3. Dimensions for the cover for non-traffic pull box are nominal values.

STATE OF CALIFORNIA
DEPARTMENT OF TRANSPORTATION

ELECTRICAL SYSTEMS (NON-TRAFFIC PULL BOX)

NO SCALE

RSP ES-8A DATED APRIL 15, 2016 SUPERSEDES STANDARD PLAN ES-8A
DATED OCTOBER 30, 2015 - PAGE 473 OF THE STANDARD PLANS BOOK DATED 2015.

REVISED STANDARD PLAN RSP ES-8A

2015 REVISED STANDARD PLAN RSP ES-8A

1-22-16

Dist	COUNTY	ROUTE	POST MILES TOTAL PROJECT	SHEET No.	TOTAL SHEETS
10	SJ	99	0.0/5.7	115	116

Theresa Gabriel
REGISTERED ELECTRICAL ENGINEER

April 15, 2016
PLANS APPROVAL DATE

REGISTERED PROFESSIONAL ENGINEER
Theresa Aziz Gabriel
No. E15129
Exp. 6-30-16
ELECTRICAL
STATE OF CALIFORNIA

THE STATE OF CALIFORNIA OR ITS OFFICERS OR AGENTS SHALL NOT BE RESPONSIBLE FOR THE ACCURACY OR COMPLETENESS OF SCANNED COPIES OF THIS PLAN SHEET.

TO ACCOMPANY PLANS DATED 5-2-16

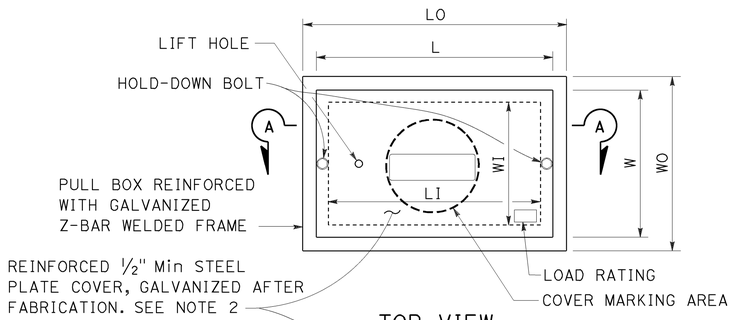

TOP VIEW

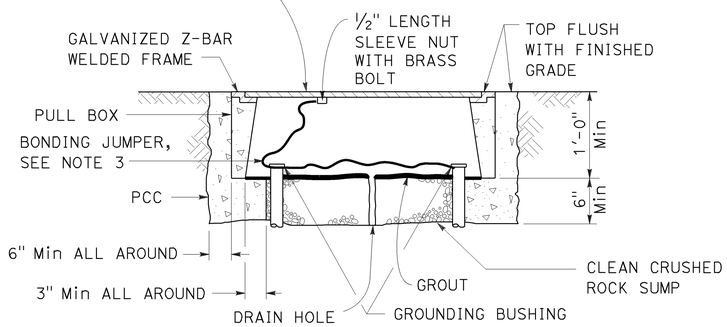

SECTION A-A

No. 3½(T), No. 5(T) AND No. 6(T) TRAFFIC PULL BOX

NOTES:

1. Traffic pull box shall be provided with steel cover and special concrete footing. Steel cover shall have embossed non-skid pattern.
2. Steel reinforcing shall be as regularly used in the standard products of the respective manufacturer.
3. Bonding jumper for metal covers shall be 3' long, minimum.
4. The nominal dimensions of the opening in which the cover sets shall be the same as the cover dimensions except the length and width dimensions shall be ⅛" greater.
5. Covers and boxes shall be interchangeable with California standard male and female gages. When interchanged with a standard male or female gage, the top surfaces shall be flush within ⅛".

DIMENSION TABLE

PULL BOX	PULL BOX						COVER	
	MINIMUM * THICKNESS	MINIMUM DEPTH BOX AND EXTENSION	LO	LI	WO	WI	L **	W **
No. 3½(T)	1½"	1'-0"	1'-10" - 1'-11"	1'-5" - 1'-6½"	1'-3" - 1'-4"	10" - 1'-0"	1'-8" - 1'-8½"	1'-1" - 1'-2"
No. 5(T)	1¾"	1'-0"	2'-5" - 2'-6"	2'-0" - 2'-1"	1'-6" - 1'-7"	1'-1" - 1'-2"	2'-3" - 2'-3½"	1'-4" - 1'-4½"
No. 6(T)	2"	1'-0"	2'-11" - 3'-1"	2'-6" - 2'-7"	1'-10" - 2'-0"	1'-5" - 1'-6"	2'-9" - 2'-9½"	1'-8" - 1'-8½"

* EXCLUDING CONDUIT WEB ** TOP DIMENSION

STATE OF CALIFORNIA
DEPARTMENT OF TRANSPORTATION

ELECTRICAL SYSTEMS (TRAFFIC PULL BOX)

NO SCALE

RSP ES-8B DATED APRIL 15, 2016 SUPERSEDES STANDARD PLAN ES-8B DATED OCTOBER 30, 2015 - PAGE 474 OF THE STANDARD PLANS BOOK DATED 2015.

REVISED STANDARD PLAN RSP ES-8B

2015 REVISED STANDARD PLAN RSP ES-8B

1-22-16

Dist	COUNTY	ROUTE	POST MILES TOTAL PROJECT	SHEET No.	TOTAL SHEETS
10	SJ	99	0.0/5.7	116	116

Theresa Gabriel
REGISTERED ELECTRICAL ENGINEER

April 15, 2016
PLANS APPROVAL DATE

REGISTERED PROFESSIONAL ENGINEER Theresa Aziz Gabriel No. E15129 Exp. 6-30-16 ELECTRICAL STATE OF CALIFORNIA

THE STATE OF CALIFORNIA OR ITS OFFICERS OR AGENTS SHALL NOT BE RESPONSIBLE FOR THE ACCURACY OR COMPLETENESS OF SCANNED COPIES OF THIS PLAN SHEET.

TO ACCOMPANY PLANS DATED 5-2-16

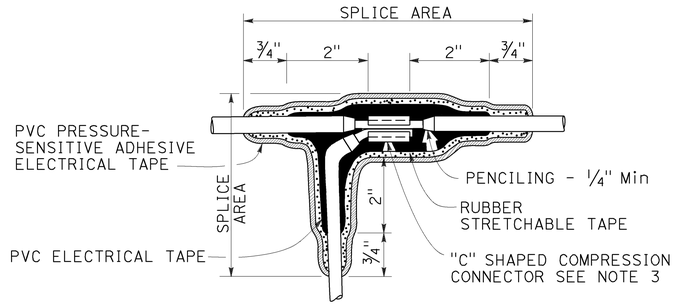

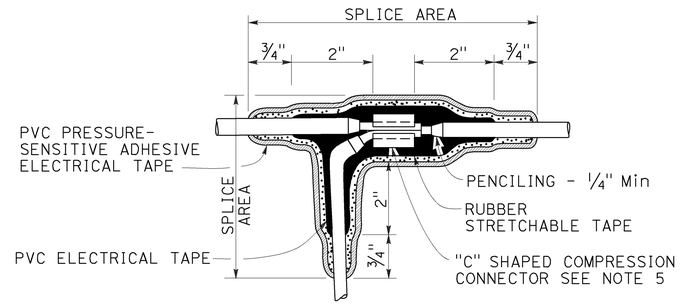

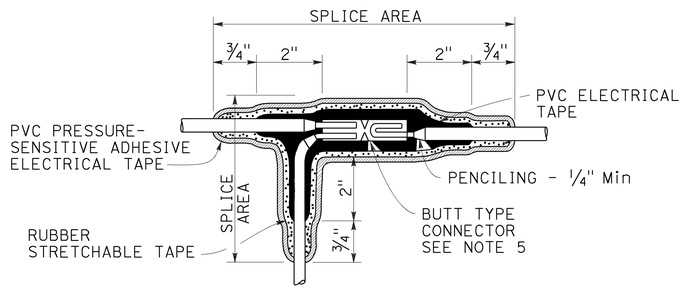

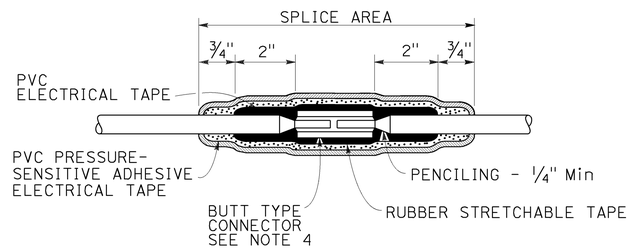

TYPICAL SPLICE INSULATION METHOD B

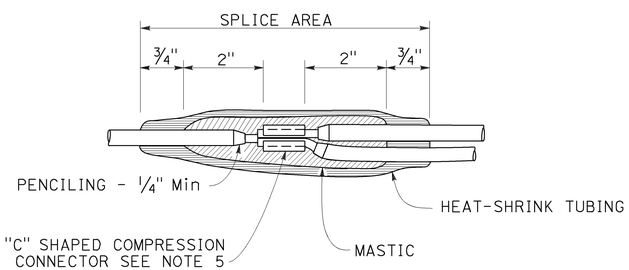

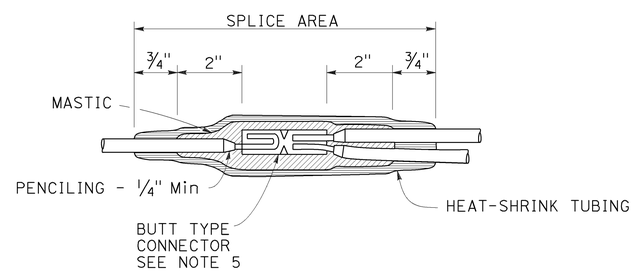

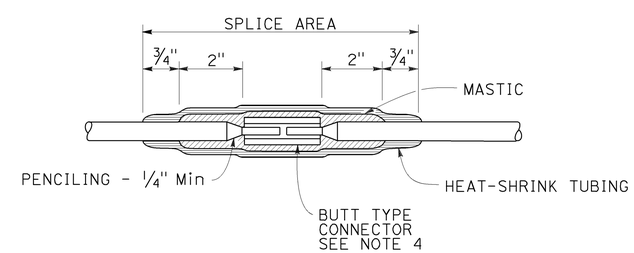

TYPICAL SPLICE INSULATION HEAT-SHRINK TUBING

NOTES:

1. Dimensions are minimum.
2. Rubber tapes shall be rolled after application.
3. Between 1 free-end and 1 through conductor.
4. Between 2 free-end conductors.
5. Between 3 free-end conductors.

STATE OF CALIFORNIA
DEPARTMENT OF TRANSPORTATION

ELECTRICAL SYSTEMS (SPLICE INSULATION METHODS DETAILS)

NO SCALE

RSP ES-13A DATED APRIL 15, 2016 SUPERSEDES STANDARD PLAN ES-13A DATED OCTOBER 30, 2015 - PAGE 484 OF THE STANDARD PLANS BOOK DATED 2015.

REVISED STANDARD PLAN RSP ES-13A

2015 REVISED STANDARD PLAN RSP ES-13A

12-16-15