DIST	COUNTY	ROUTE	POST MILES TOTAL PROJECT	SHEET No.	TOTAL SHEETS
04	SM	101,114	1.3/2.5, 5.0/5.3	501	568

REGISTERED CIVIL ENGINEER 11-10-15 DATE

6-29-16
PLANS APPROVAL DATE

REGISTERED PROFESSIONAL ENGINEER LINAN WANG No. 54714 Exp. 12-31-17 CIVIL STATE OF CALIFORNIA

The State of California or its officers or agents shall not be responsible for the accuracy or completeness of electronic copies of this plan sheet.

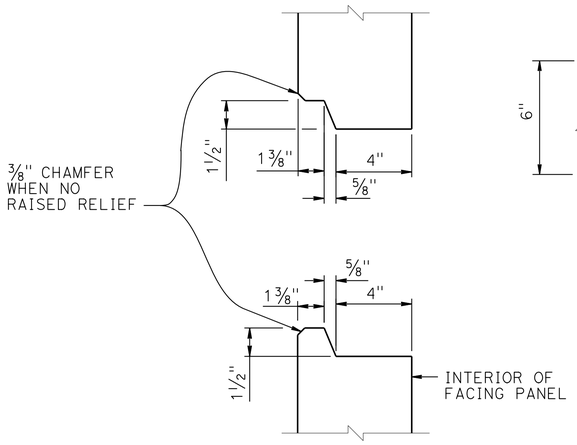

HORIZONTAL JOINT DETAIL

3" = 1'-0"

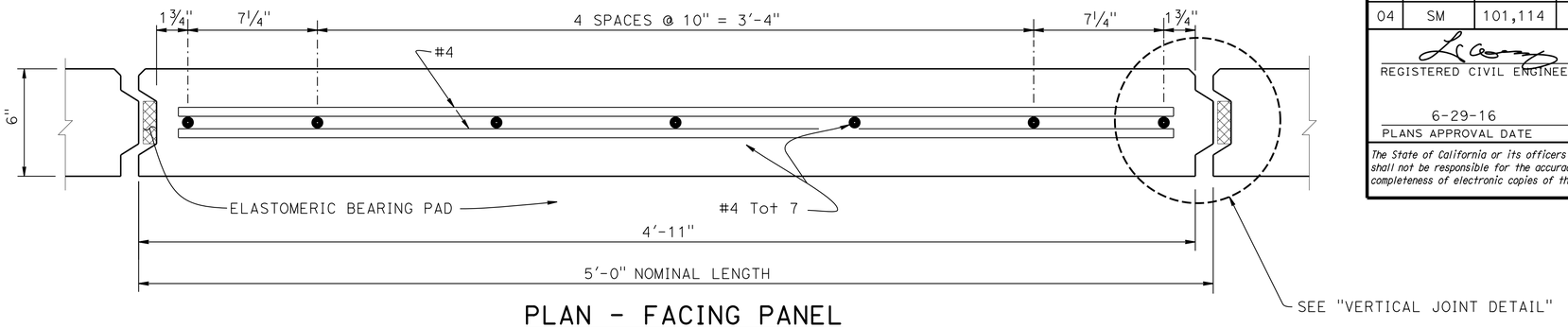

PLAN - FACING PANEL

3" = 1'-0"

NOTES:

1. Architectural treatment not shown
2. Place reinforced elastomeric bearing pads in all of the panel joints between the panels. Place one in each vertical joint where the horizontal joints intersect. Place two per panel in each horizontal joint:
   3/4" x 2 3/8" x 6" for vertical joints
   3/4" x 4" x 6" for horizontal joints
3. Bond a strip of filter fabric, 1'-0" wide, over the full length of all panel joints
4. Top layer of welded wire mats attached parallel to top of panel when top of wall is angled or curved as shown elsewhere in "STRUCTURE PLANS"
5. Eliminate mid level mat when closer than 6" to top mat, continue variable dimension between remaining mats

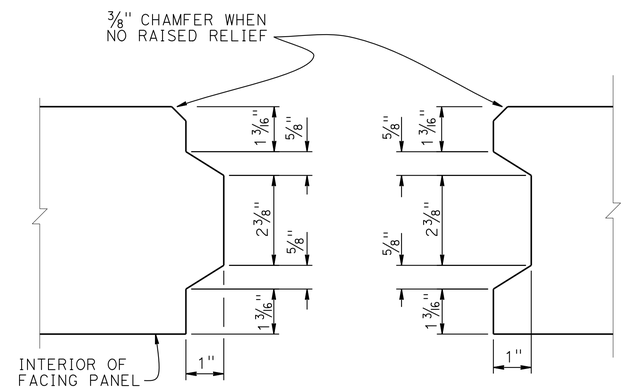

VERTICAL JOINT DETAIL

6" = 1'-0"

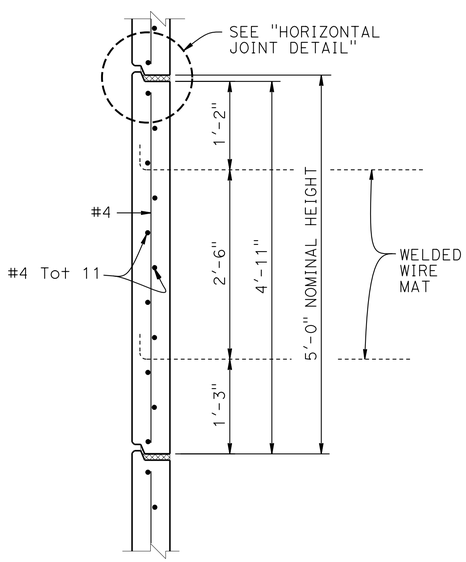

INTERMEDIATE PANEL

1" = 1'-0"

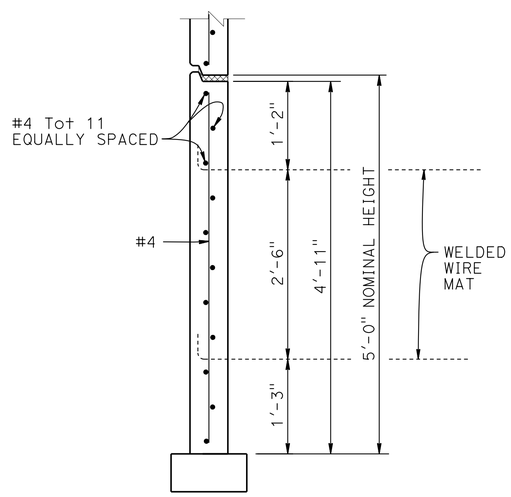

BOTTOM PANEL

1" = 1'-0"

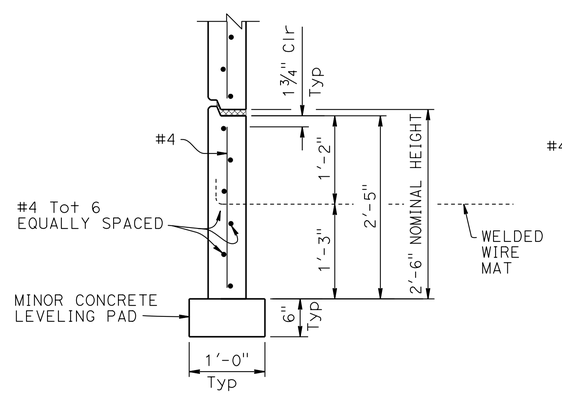

BOTTOM HALF PANEL

1" = 1'-0"

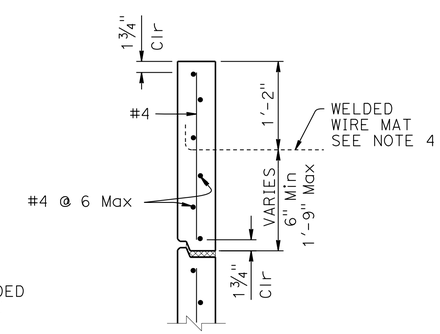

TOP HALF PANEL

1" = 1'-0"

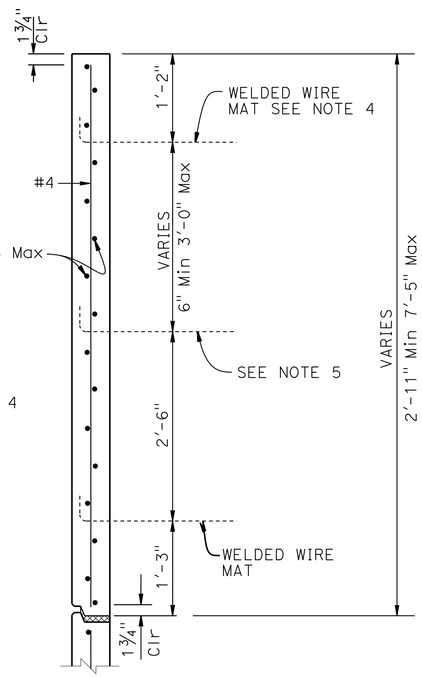

TOP PANEL WITH MULTIPLE MATS

1" = 1'-0"

ROUTE 101/ WILLOW INTERCHANGE

SOUND WALL 1 AND RETAINING WALL 1

MECHANICALLY STABILIZED EMBANKMENT

DETAILS No. 1

STANDARD DRAWING

FILE NO. **xs13-020-1**

APPROVAL DATE July 2014

STATE OF **CALIFORNIA** DEPARTMENT OF TRANSPORTATION

DIVISION OF ENGINEERING SERVICES

BRIDGE NO. 35E0048

POST MILE 1.75-1.82

DS OSD 2147A (ENGLISH STANDARD DRAWING "XS" BORDER REV. (02-02-11)

ORIGINAL SCALE IN INCHES FOR REDUCED PLANS 0 1 2 3

UNIT: 59-3579
PROJECT NUMBER & PHASE: 04000006804
CONTRACT NO.: 04-235654

DISREGARD PRINTS BEARING EARLIER REVISION DATES

REVISION DATES 2-22-15 06-04-15 8-19-15

SHEET 12 OF 18

FILE => 35e0048-x-xs13-020-1.dgn

USERNAME => s132175 DATE PLOTTED => 17-AUG-2016 TIME PLOTTED => 11:31

DIST	COUNTY	ROUTE	POST MILES TOTAL PROJECT	SHEET No.	TOTAL SHEETS
04	SM	101,114	1.3/2.5, 5.0/5.3	502	568

REGISTERED CIVIL ENGINEER 11-10-15 DATE

6-29-16
PLANS APPROVAL DATE

REGISTERED PROFESSIONAL ENGINEER LINAN WANG No. 54714 Exp. 12-31-17 CIVIL STATE OF CALIFORNIA

The State of California or its officers or agents shall not be responsible for the accuracy or completeness of electronic copies of this plan sheet.

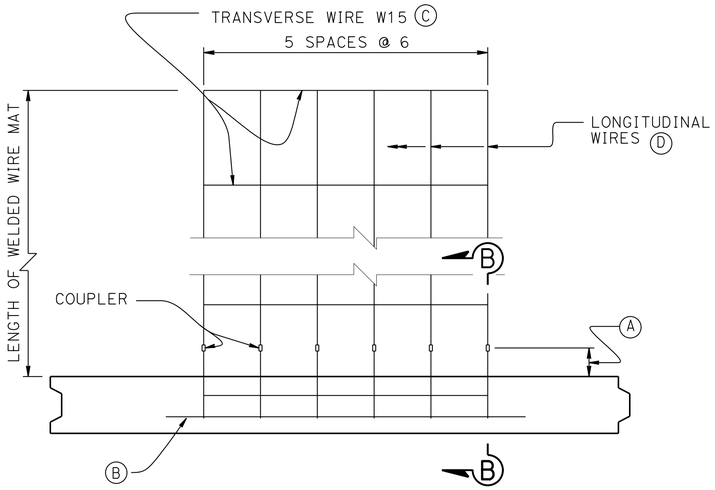

PLAN OF PANEL WITH SIX WIRE MAT

1½" = 1'-0"

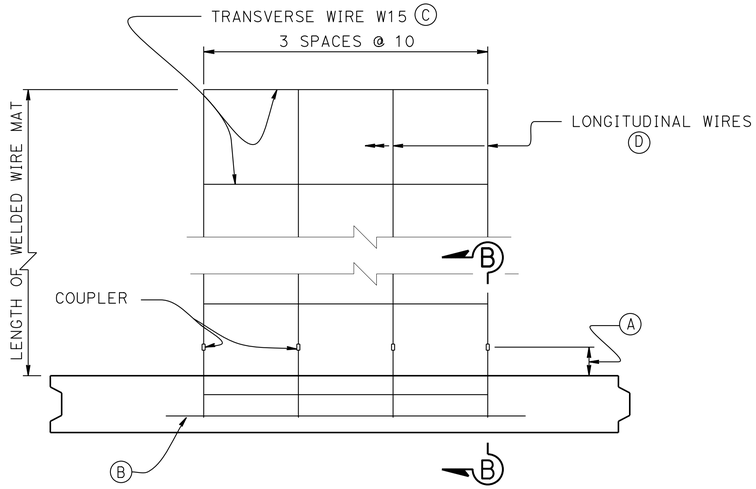

PLAN OF PANEL WITH FOUR WIRE MAT

1½" = 1'-0"

GENERAL NOTES
LOAD & RESISTANCE FACTOR DESIGN

DESIGN: AASHTO LRFD Bridge Design Specifications, 4th Edition with California Amendments

LIVE LOAD: Surcharge = 240 lb/ft^2

SOIL PARAMETERS:

Internal design ϕ = 34°, γ = 120 lb/ft^3

External design ϕ(Retained Backfill) = 30°, γ = 120 lb/ft^3

ϕ(Foundation) = 30°

K_h = 0.2

PRECAST CONCRETE PANELS:

f'c = 4,000 psi (Concrete compressive strength at 28 days)

fy = 60,000 psi (Yield strength of reinforcement)

SOIL REINFORCEMENT:

Welded wire mats: fy = 65,000 psi (Yield strength)

Coupler: fy = 36,000 psi (Yield strength)

Corrosion rate = 1.1 mils/year

REINFORCED CONCRETE:

f'c = 3,600 psi, except as noted

(Concrete compressive strength at 28 days)

fy = 60,000 psi (Yield strength of reinforcement)

MSE = Mechanically Stabilized Embankment

NOTES:

(A) Distance as required to permit coupler to be swaged

(B) Place #4 x 3'-2", centered on connector mat, but not welded to it

(C) All transverse wires size W15 at various spacing as shown elsewhere in plans

(D) Size of longitudinal wires shown elsewhere in plans

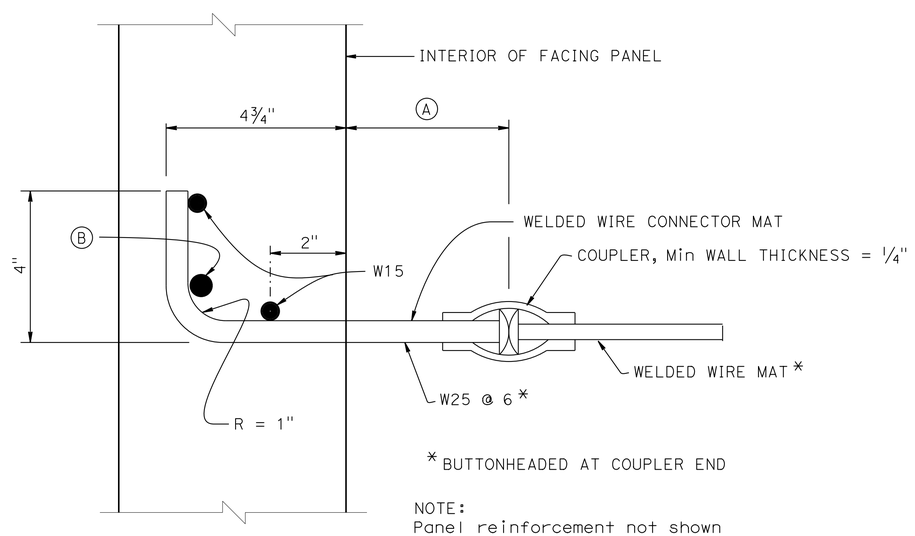

NOTE:
Panel reinforcement not shown

SECTION B-B

6" = 1'-0"

ROUTE 101/ WILLOW INTERCHANGE

SOUND WALL 1 AND RETAINING WALL 1

MECHANICALLY STABILIZED EMBANKMENT

DETAILS No. 2

STANDARD DRAWING

FILE NO. xs13-020-2

APPROVAL DATE July 2014

STATE OF CALIFORNIA DEPARTMENT OF TRANSPORTATION

DIVISION OF ENGINEERING SERVICES

BRIDGE NO. 35E0048

POST MILE 1.75-1.82

DS OSD 2147A (ENGLISH STANDARD DRAWING "XS" BORDER REV. (02-02-11)

ORIGINAL SCALE IN INCHES FOR REDUCED PLANS 0 1 2 3

UNIT: 59-3579

PROJECT NUMBER & PHASE: 04000006804

CONTRACT NO.: 04-235654

DISREGARD PRINTS BEARING EARLIER REVISION DATES

REVISION DATES 2-27-15 06-04-15 08-19-15

SHEET 13 OF 18

FILE => 35e0048-x-xs13-020-2.dgn

USERNAME => s132175 DATE PLOTTED => 17-AUG-2016 TIME PLOTTED => 11:31

DIST	COUNTY	ROUTE	POST MILES TOTAL PROJECT	SHEET No.	TOTAL SHEETS
04	SM	101,114	1.3/2.5, 5.0/5.3	503	568

REGISTERED CIVIL ENGINEER 11-10-15 DATE

6-29-16
PLANS APPROVAL DATE

REGISTERED PROFESSIONAL ENGINEER LINAN WANG No. 54714 Exp. 12-31-17 CIVIL STATE OF CALIFORNIA

The State of California or its officers or agents shall not be responsible for the accuracy or completeness of electronic copies of this plan sheet.

DESIGN DATA

DESIGN: AASHTO LRFD Bridge Design Specifications, 4th Edition with California Amendments.

WS: 33 psf on sound wall

F_t : 54 kips on barrier

EQE: k_h = 0.2

k_v = 0.0 ◇1

REINFORCED CONCRETE: f'c = 3600 psi

fy = 60 ksi

n = 8

NOTES:

1. Low end of subgrade drain shown, at high end install cap at end of 3" slotted pipe. Subgrade drain located at end of Structure Approach slab, see "STRUCTURE PLANS"
2. Not all barrier reinforcement shown
3. For outlet details, see "STRUCTURE PLANS"
4. At acute corners of approach slab, bend reinforcement as required to clear expansion joint
5. Specific concrete barrier to be utilized as shown on "TYPICAL SECTION" elsewhere in "STRUCTURE PLANS". For barrier on slab without Soundwall see "CONCRETE BARRIER SLAB DETAILS" xs12-090

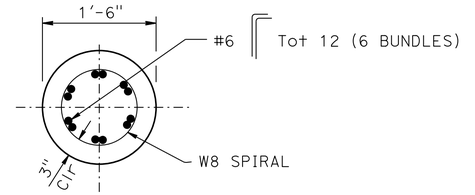

SECTION A-A

1" = 1'-0"

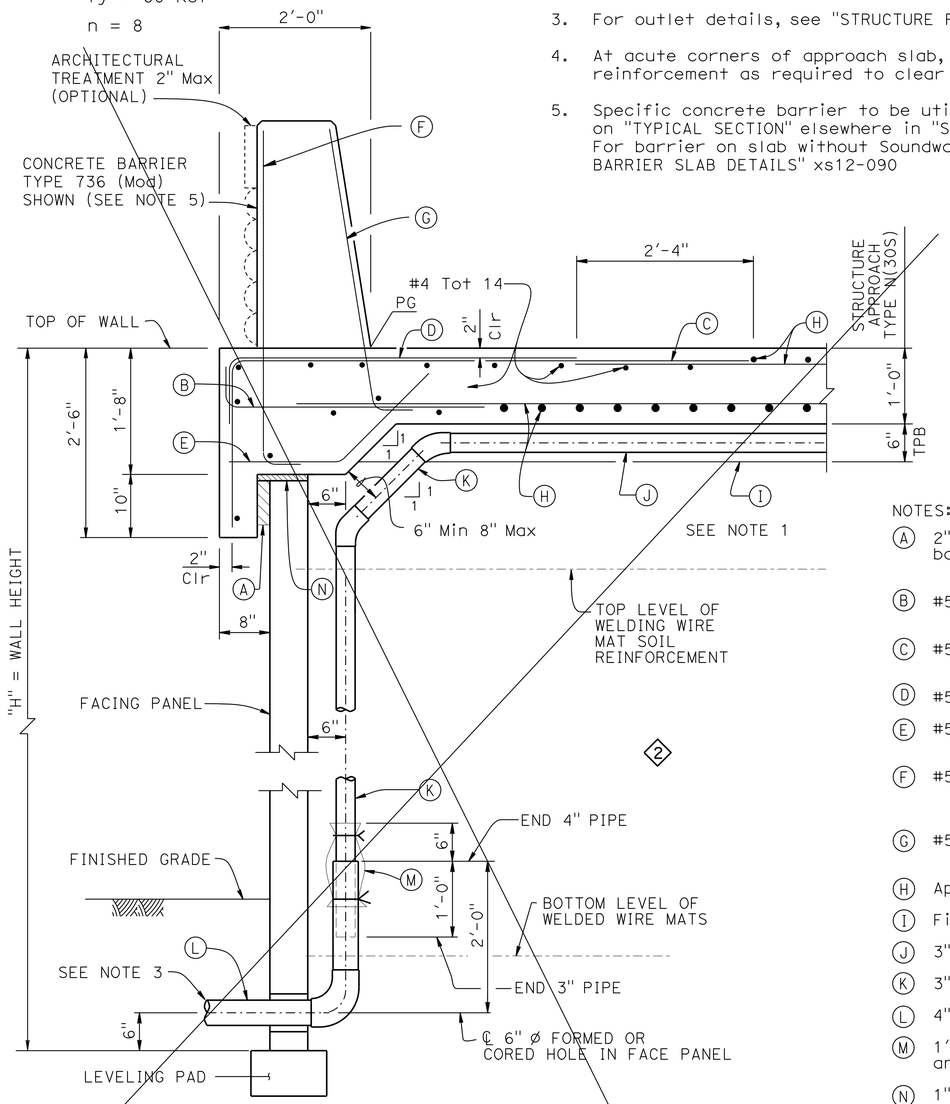

SECTION AT TOP OF MSE WITH STRUCTURE APPROACH SLAB AND CONCRETE BARRIER

1" = 1'-0"

NOTES:

(A) 2" Expanded Polystyrene recessed 2" into barrier slab at front of MSE facing panel

(B) #5 6¼" 3'-4" @ 12

(C) #5 6'-10⅝" @ 12

(D) #5 4'-7" @ 12 bundled with (C) bars

(E) #5 @ 12

(F) #5 6¼" @ 16 (To be in place prior to Approach Slab concrete)

(G) #5 6¼" @ 8 (To be in place prior to Approach Slab concrete)

(H) Approach Slab reinforcement

(I) Filter fabric

(J) 3" Plastic pipe (slotted)

(K) 3" Plastic pipe and fitting (unslotted)

(L) 4" Schedule 80 PVC outlet pipe and fittings (unslotted)

(M) 1'-0" wide x 2'-0" filter fabric wrapped around pipe and secured with nylon ties

(N) 1" Expanded Polystyrene

(O) Place elastomeric bearing pads ¾" x 4" x 6" every 1'-8" Min bonded to top of MSE facing panel

(P) ¾" Expanded Polystyrene

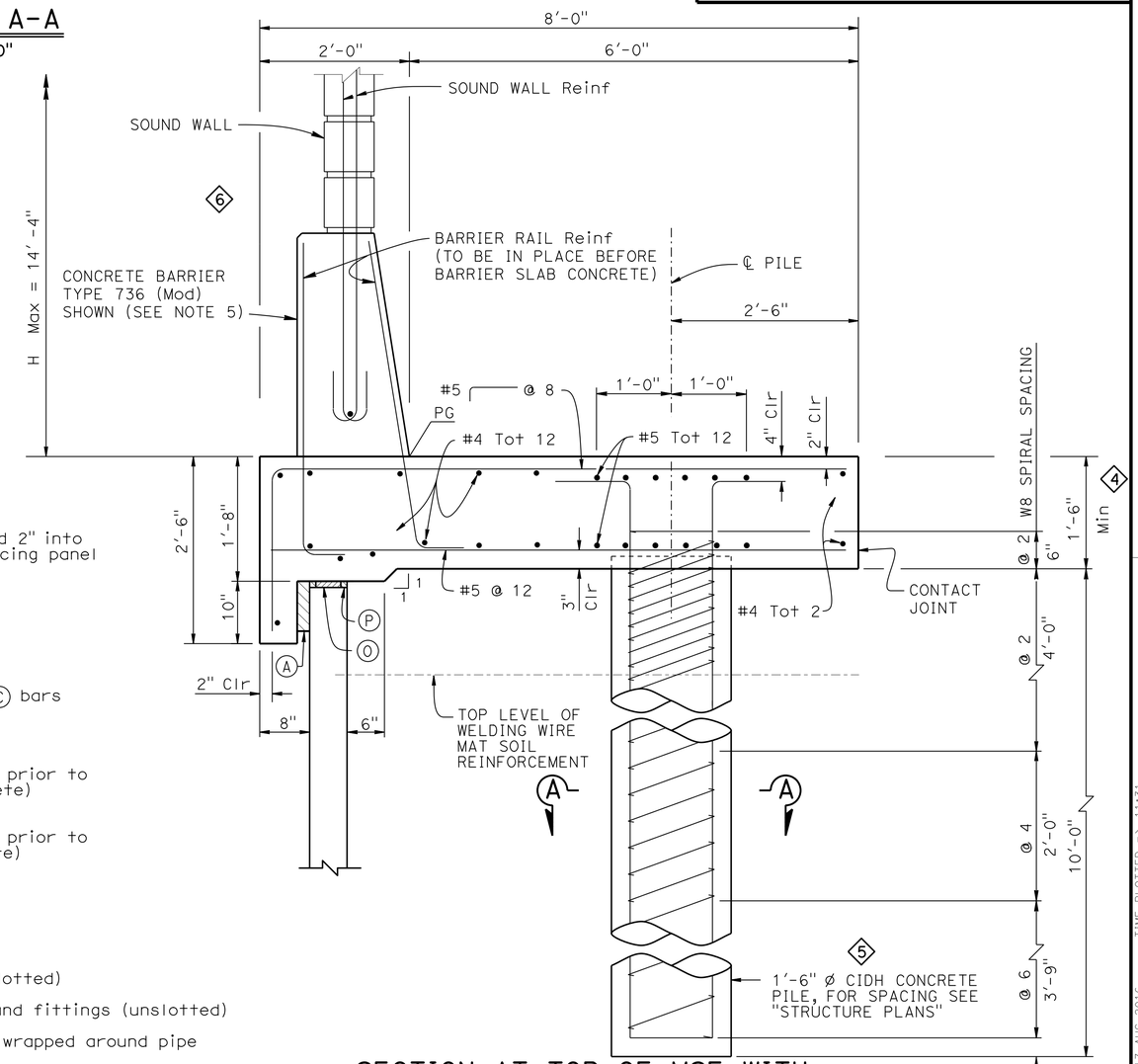

SECTION AT TOP OF MSE WITH SOUND WALL AND CONCRETE BARRIER

1" = 1'-0"

ROUTE 101/ WILLOW INTERCHANGE

SOUND WALL 1 AND RETAINING WALL 1

MECHANICALLY STABILIZED EMBANKMENT

DETAILS No. 3 ◇3

STANDARD DRAWING

FILE NO. xs13-020-5

APPROVAL DATE July 2014

◇1 Add Data ◇2 Delete Detail ◇3 Rearrange Details Number ◇4 Add Note ◇5 REVISE NOTE ◇6 Delete Note & Architectural Treatment

STATE OF CALIFORNIA DEPARTMENT OF TRANSPORTATION

DIVISION OF ENGINEERING SERVICES

BRIDGE NO. 35E0048

POST MILE 1.75-1.82

DS OSD 2147A (ENGLISH STANDARD DRAWING "XS" BORDER REV. (02-02-11)

ORIGINAL SCALE IN INCHES FOR REDUCED PLANS 0 1 2 3

UNIT: 59-3579

PROJECT NUMBER & PHASE: 04000006804

CONTRACT NO.: 04-235654

DISREGARD PRINTS BEARING EARLIER REVISION DATES

REVISION DATES 2-22-15 11-23-15 11-04-15

SHEET 14 OF 18

FILE => 35e0048-x-xs13-020-3.dgn

USERNAME => s132175 DATE PLOTTED => 17-AUG-2016 TIME PLOTTED => 11:31

DIST	COUNTY	ROUTE	POST MILES TOTAL PROJECT	SHEET No.	TOTAL SHEETS
04	SM	101,114	1.3/2.5, 5.0/5.3	504	568

REGISTERED CIVIL ENGINEER 11-10-15 DATE

6-29-16
PLANS APPROVAL DATE

REGISTERED PROFESSIONAL ENGINEER LINAN WANG No. 54714 Exp. 12-31-17 CIVIL STATE OF CALIFORNIA

The State of California or its officers or agents shall not be responsible for the accuracy or completeness of electronic copies of this plan sheet.

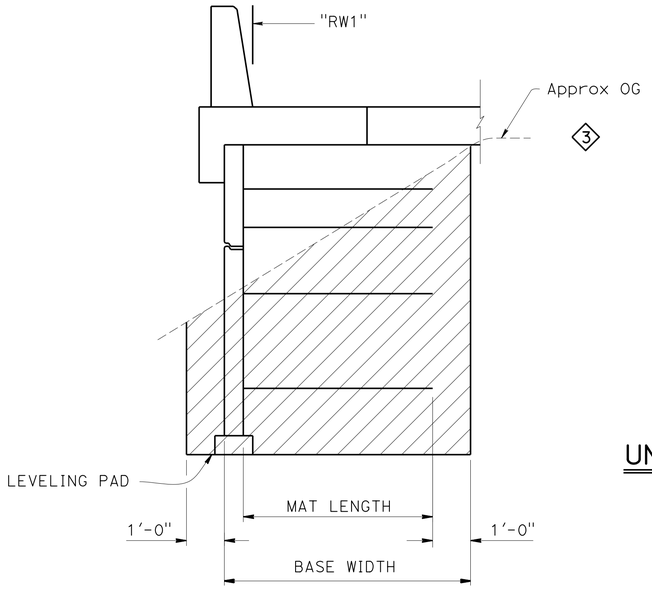

LIMITS OF EXCAVTION

½" = 1'-0"

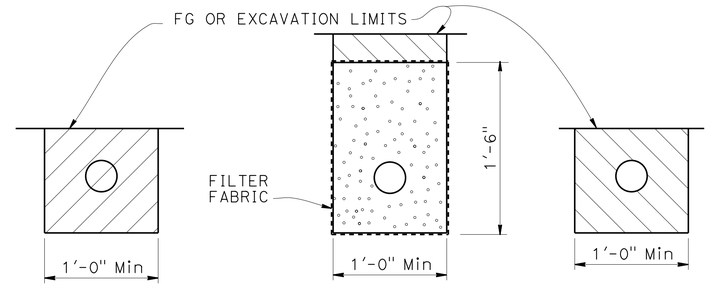

OUTLET PIPE CLEANOUT PIPE

EXCAVATION BACKFILL

UNPERFORATED OUTLET OR CLEAN OUT PIPE FOR UNDERDRAIN

NO SCALE

NOTES:

1. Limits to FG except to GP when in roadway section
2. Locate underdrain behind bottom level of welded wire mats wherever possible, or at elevation needed to drain, as shown elsewhere on plans
3. Place perforated pipe underdrain of diameter shown elsewhere on plans or minimum 4" Ø smoothed wall PVC or minimum 8" Ø corrugated HDPE
4. Maximum spacing of outlet pipe is 200 feet
5. At sags in profile of underdrain, install outlet pipe for each direction of flow

LEGEND:

- Limits of Structure Excavation
- Limits of Structure Backfill
- Limits of Permeable Material

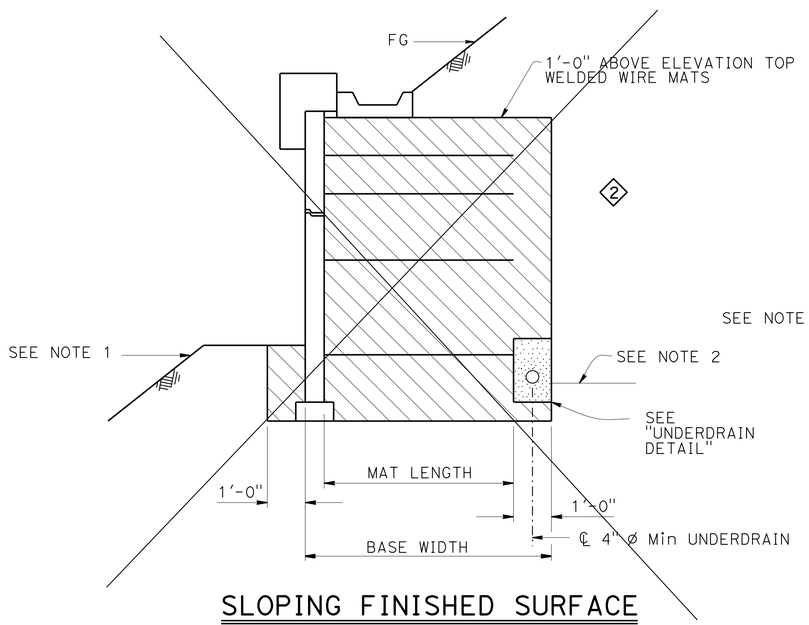

SLOPING FINISHED SURFACE

½" = 1'-0"

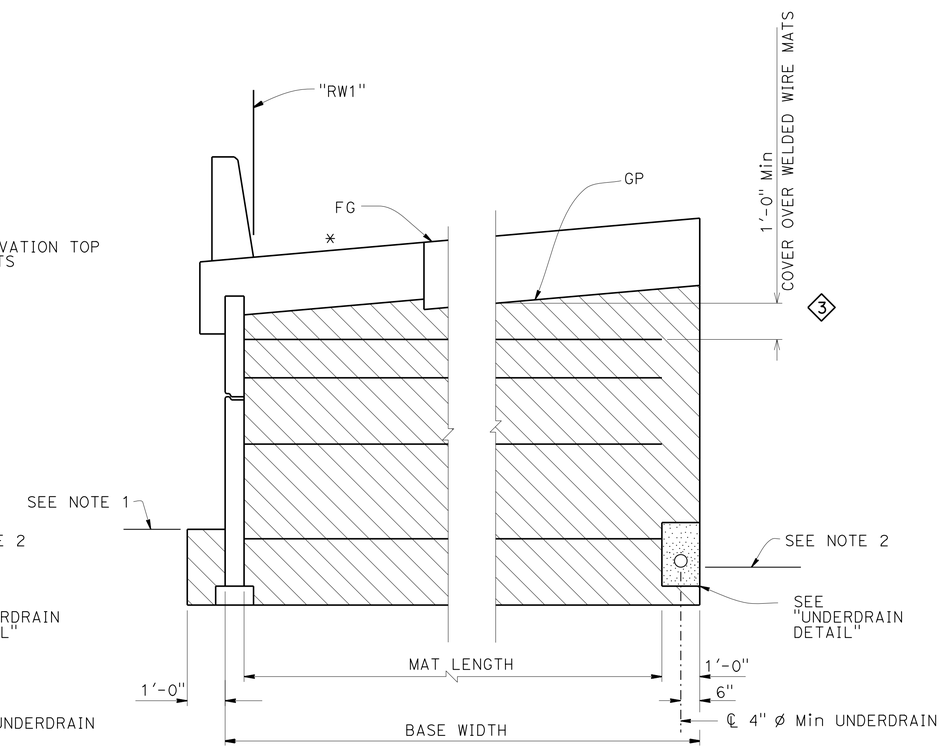

ROADWAY SECTION

½" = 1'-0"

* Match Roadway Cross Slope

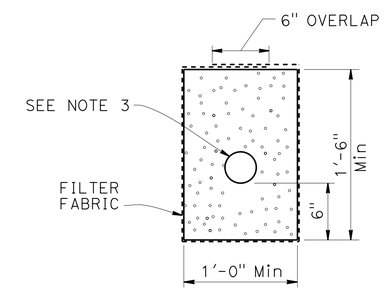

UNDERDRAIN DETAIL

LIMITS OF BACKFILL

STANDARD DRAWING				
FILE NO. xs13-020-6	APPROVAL DATE July 2014	1 Rearrange Details Number	3 Revised Detail	
		2 Delete Detail		

STATE OF CALIFORNIA DEPARTMENT OF TRANSPORTATION

DIVISION OF ENGINEERING SERVICES

BRIDGE NO. 35E0048

POST MILE 1.75-1.82

ROUTE 101/ WILLOW INTERCHANGE

SOUND WALL 1 AND RETAINING WALL 1

MECHANICALLY STABILIZED EMBANKMENT

DETAILS No. 4 1

DS OSD 2147A (ENGLISH STANDARD DRAWING "XS" BORDER REV. (02-02-11))

ORIGINAL SCALE IN INCHES FOR REDUCED PLANS 0 1 2 3

UNIT: 59-3579
PROJECT NUMBER & PHASE: 04000006804
CONTRACT NO.: 04-235654

DISREGARD PRINTS BEARING EARLIER REVISION DATES

REVISION DATES: 2-22-15 10-27-15 11-05-15

SHEET 15 OF 18

FILE => 35e0048-x-xs13-020-4.dgn

USERNAME => s132775 DATE PLOTTED => 17-AUG-2016 TIME PLOTTED => 11:31

DIST	COUNTY	ROUTE	POST MILES TOTAL PROJECT	SHEET No.	TOTAL SHEETS
04	SM	101,114	1.3/2.5, 5.0/5.3	505	568

REGISTERED CIVIL ENGINEER 11-10-15 DATE

6-29-16
PLANS APPROVAL DATE

REGISTERED PROFESSIONAL ENGINEER
LINAN WANG
No. 54714
Exp. 12-31-17
CIVIL
STATE OF CALIFORNIA

The State of California or its officers or agents shall not be responsible for the accuracy or completeness of electronic copies of this plan sheet.

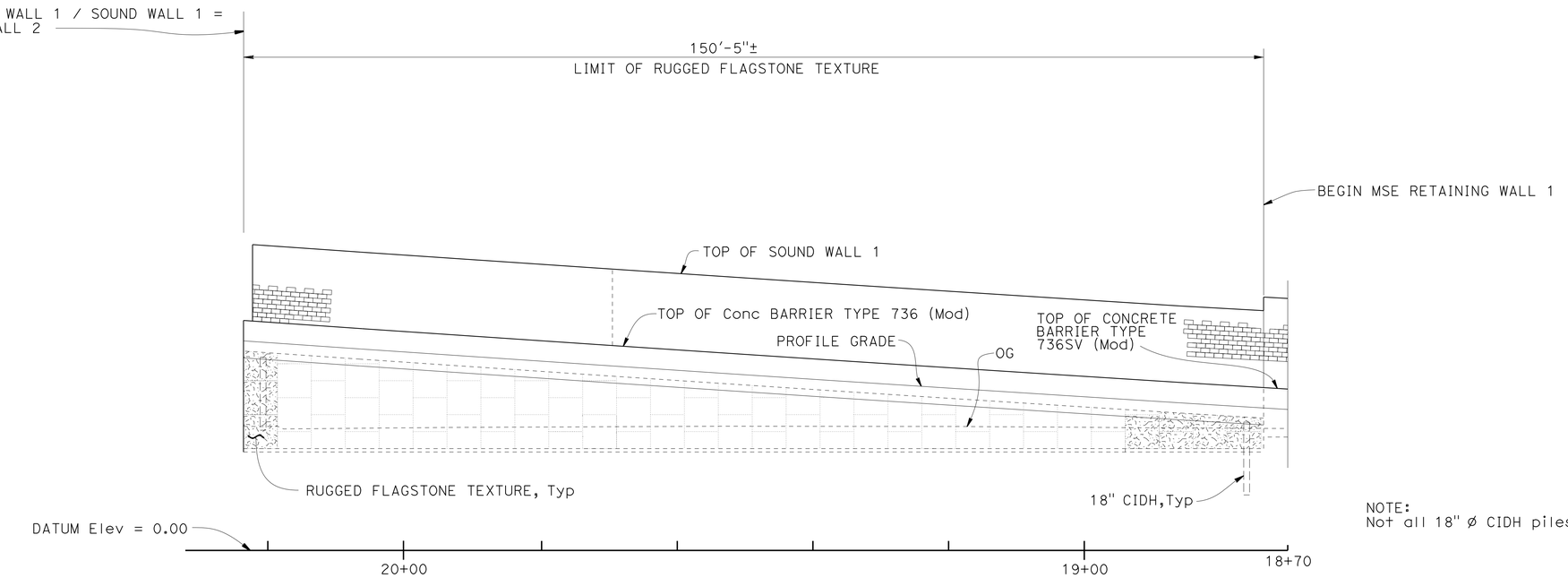

NOTE:
Not all 18" Ø CIDH piles not shown.

DEVELOPED AND MIRRORED ELEVATION
RUGGED FLAGSTONE TEXTURE

1" = 10'

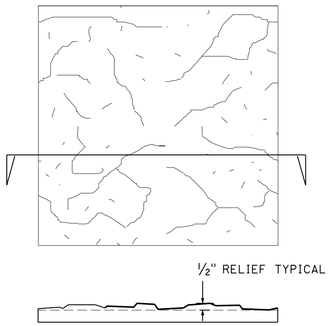

RUGGED FLAGSTONE TEXTURE
NO SCALE

NOTE:
THE CONTRACTOR MUST VERIFY ALL CONTROLLING FIELD DIMENSIONS BEFORE ORDERING OR FABRICATING ANY MATERIAL.

	BY	CHECKED
DESIGN	Li Barnard	Linan Wang
DETAILS	Wei Zhang	Linan Wang
QUANTITIES	Li Barnard	Linan Wang

STATE OF CALIFORNIA
DEPARTMENT OF TRANSPORTATION

DIVISION OF ENGINEERING SERVICES
STRUCTURE DESIGN
DESIGN BRANCH 4

BRIDGE NO. 35E0048
POST MILE 1.75-1.82

ROUTE 101/ WILLOW INTERCHANGE
SOUND WALL 1 AND RETAINING WALL 1
ARCHITECTURAL DETAILS

STRUCTURES DESIGN DETAIL SHEET (ENGLISH) (REV. 09-01-10)

ORIGINAL SCALE IN INCHES FOR REDUCED PLANS 0 1 2 3

UNIT: 59-3579
PROJECT NUMBER & PHASE: 0400000680 4
CONTRACT NO.: 04-235654

DISREGARD PRINTS BEARING EARLIER REVISION DATES

REVISION DATES: 11-18-15

SHEET 16 OF 18

FILE => 35e0048-y-aesthdt01.dgn

USERNAME => s132775 DATE PLOTTED => 17-AUG-2016 TIME PLOTTED => 11:31

DIST	COUNTY	ROUTE	POST MILES TOTAL PROJECT	SHEET No.	TOTAL SHEETS
04	SM	101,114	1.3/2.5, 5.0/5.3	506	568

REGISTERED CIVIL ENGINEER — DATE 10-20-15

6-29-16
APPROVAL DATE

PROFESSIONAL GEOLOGIST — Matthew Gaffney No. 8045 Exp. 6-30-16 — STATE OF CALIFORNIA

The State of California or its officers or agents shall not be responsible for the accuracy or completeness of electronic copies of this plan sheet.

This LOTB sheet was prepared in accordance with the Caltrans Soil & Rock Logging, Classification, & Presentation Manual (2010 Edition).

See 2010 Standard Plans A10F and A10G for Soil Legend, and A10H for Rock Legend.

BENCH MARK

HV 12
Fnd HV-12 (unknown monument)
9.57 FT Rt "D2" LINE ROUTE 101
Sta 223+55.98
N 1,997,459.76
E 6,081,283.65
Elev = 41.97

HV 10142
Fnd WP10102 PK
1311.66 Ft Lt "D2" LINE ROUTE 101
Sta 216+59.97
N 1,998,932.13
E 6,081,532.78
Elev = 14.09

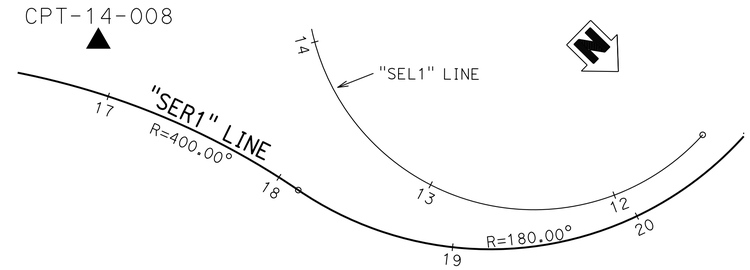

PLAN
1" = 40'

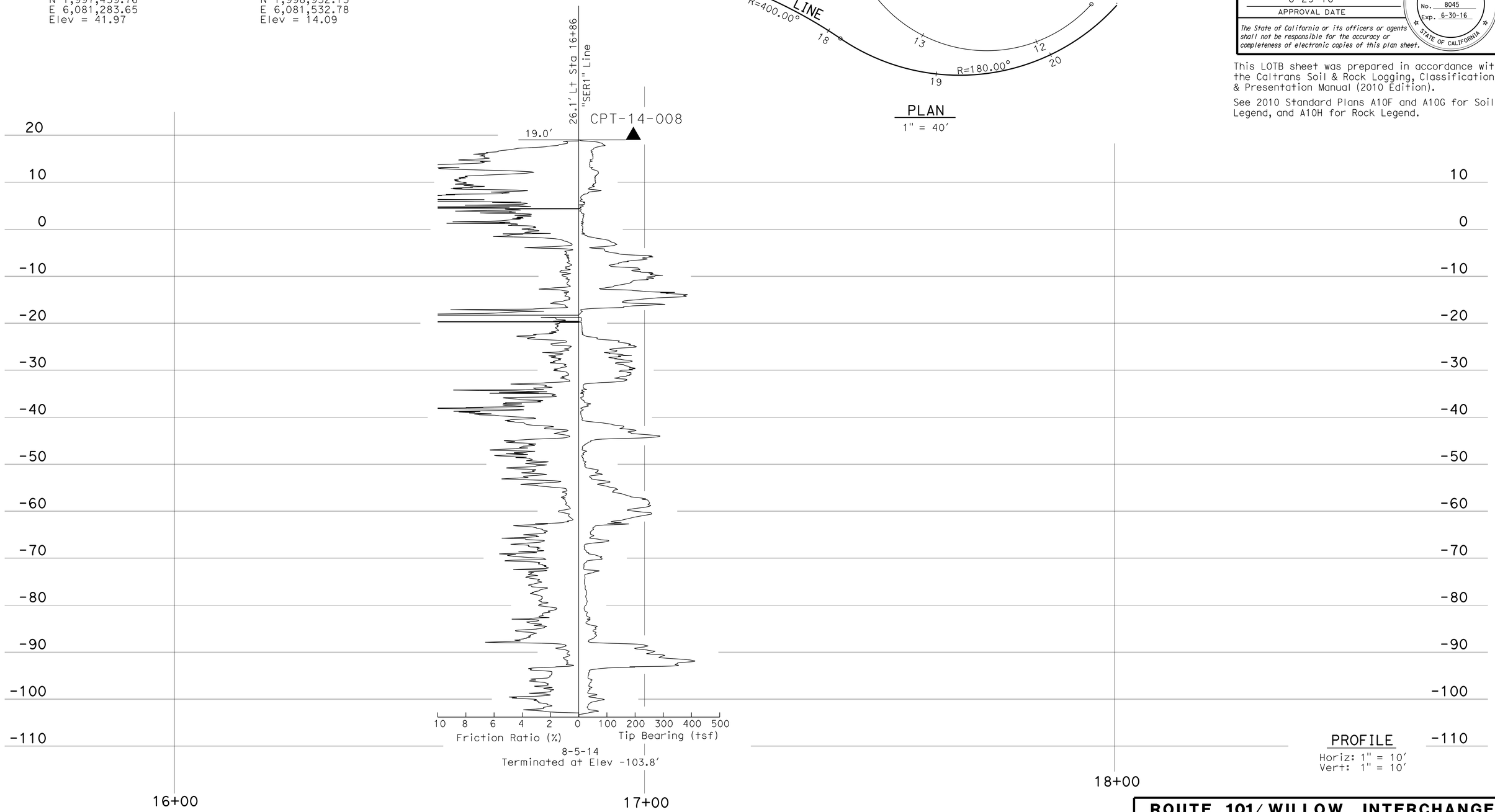

PROFILE
Horiz: 1" = 10'
Vert: 1" = 10'

ENGINEERING SERVICES	MATERIALS AND GEOTECHNICAL SERVICES	STATE OF CALIFORNIA DEPARTMENT OF TRANSPORTATION	DIVISION OF ENGINEERING SERVICES STRUCTURE DESIGN DESIGN BRANCH 4	BRIDGE NO. 35E0048 POST MILE 1.75-1.82	ROUTE 101/ WILLOW INTERCHANGE SOUND WALL 1 AND RETAINING WALL 1 LOG OF TEST BORINGS RETAINING WALL 1
FUNCTIONAL SUPERVISOR NAME: C. Risden	DRAWN BY: I. G-Remmen CHECKED BY: D. Nesbitt	FIELD INVESTIGATION BY: M. Gaffney, R. Nashed			

OGS CIVIL LOG OF TEST BORINGS SHEET

ORIGINAL SCALE IN INCHES FOR REDUCED PLANS 0 1 2 3

UNIT: 59-3579
PROJECT NUMBER & PHASE: 04000006804
CONTRACT NO.: 04-235654

DISREGARD PRINTS BEARING EARLIER REVISION DATES

REVISION DATES 08-25-15

SHEET 17 OF 18

FILE => 35e0048-z-1tb01.dgn

USERNAME => s132175 DATE PLOTTED => 17-AUG-2016 TIME PLOTTED => 11:31

DIST	COUNTY	ROUTE	POST MILES TOTAL PROJECT	SHEET No.	TOTAL SHEETS
04	SM	101,114	1.3/2.5, 5.0/5.3	507	568

REGISTERED CIVIL ENGINEER — DATE 10-20-15

6-29-16
PLANS APPROVAL DATE

PROFESSIONAL GEOLOGIST — Matthew Gaffney — No. 8045 — Exp. 6-30-16 — STATE OF CALIFORNIA

The State of California or its officers or agents shall not be responsible for the accuracy or completeness of electronic copies of this plan sheet.

This LOTB sheet was prepared in accordance with the Caltrans Soil & Rock Logging, Classification, & Presentation Manual (2010 Edition).

See 2010 Standard Plans A10F and A10G for Soil Legend, and A10H for Rock Legend.

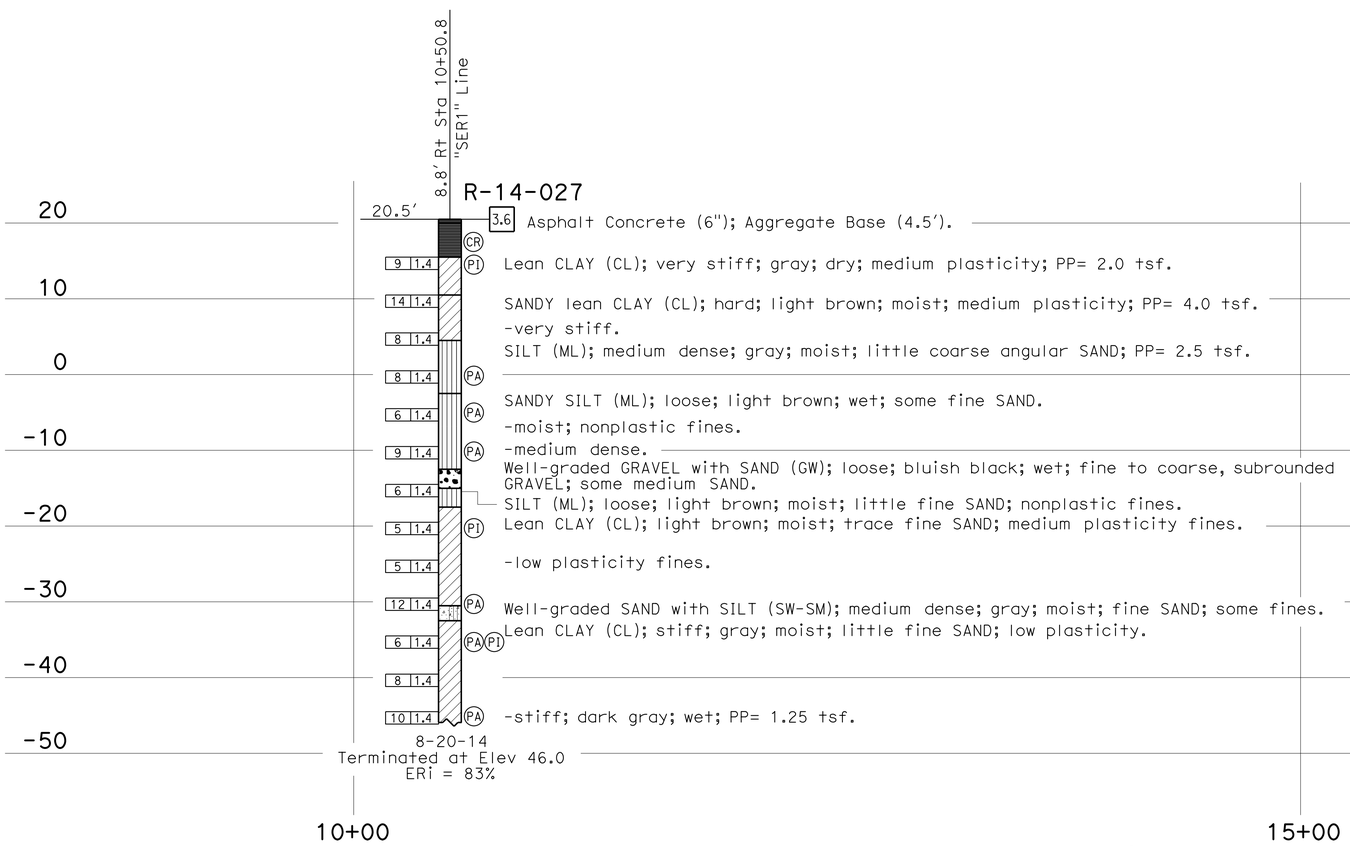

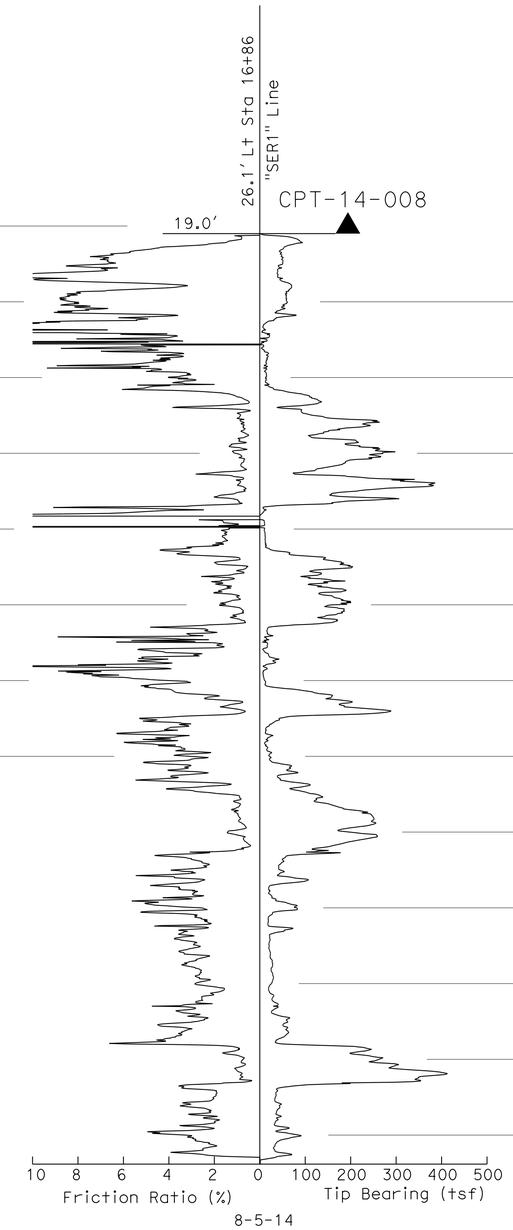

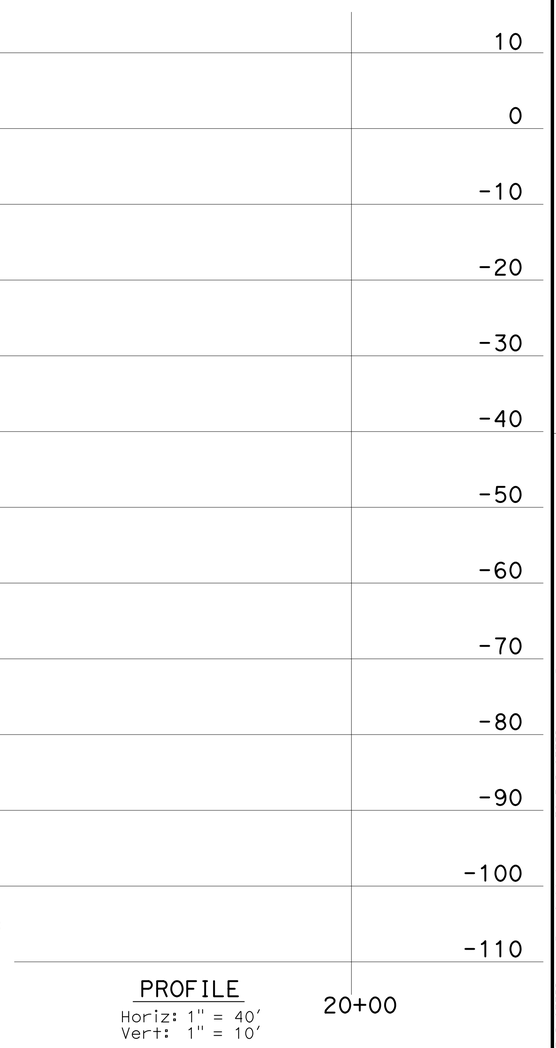

PROFILE
Horiz: 1" = 40'
Vert: 1" = 10'

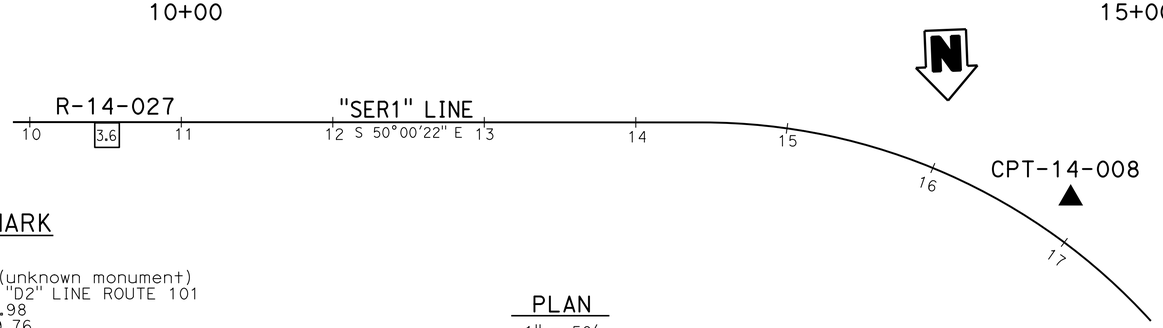

PLAN
1" = 50'

BENCH MARK

HV 12
Fnd HV-12 (unknown monument)
9.57 FT Rt "D2" LINE ROUTE 101
Sta 223+55.98
N 1,997,459.76
E 6,081,283.65
Elev = 41.97

HV 10142
Fnd WP10102 PK
1311.66 Ft Lt "D2" LINE ROUTE 101
Sta 216+59.97
N 1,998,932.13
E 6,081,532.78
Elev = 14.09

ROUTE 101/ WILLOW INTERCHANGE
SOUND WALL 1 AND RETAINING WALL 1
LOG OF TEST BORINGS SOUND WALL 1

ENGINEERING SERVICES	MATERIALS AND GEOTECHNICAL SERVICES	STATE OF CALIFORNIA DEPARTMENT OF TRANSPORTATION	DIVISION OF ENGINEERING SERVICES STRUCTURE DESIGN DESIGN BRANCH 4	BRIDGE NO. / POST MILE
FUNCTIONAL SUPERVISOR NAME: C. Risden	DRAWN BY: I. G-Remmen; CHECKED BY: D. Nesbitt	FIELD INVESTIGATION BY: M. Gaffney, R. Nashed		

OGS CIVIL LOG OF TEST BORINGS SHEET

ORIGINAL SCALE IN INCHES FOR REDUCED PLANS 0 1 2 3

UNIT: 59-3579
PROJECT NUMBER & PHASE: 04000006804
CONTRACT NO.: 04-235654

DISREGARD PRINTS BEARING EARLIER REVISION DATES

REVISION DATES: ~~08-25-15~~ 10-19-15

SHEET 18 OF 18

FILE => 35e0048-z-1tb02.dgn

USERNAME => s132175 DATE PLOTTED => 17-AUG-2016 TIME PLOTTED => 11:31

DIST	COUNTY	ROUTE	POST MILES TOTAL PROJECT	SHEET No.	TOTAL SHEETS
04	SM	101,114	1.3/2.5, 5.0/5.3	508	568

REGISTERED CIVIL ENGINEER 11-10-15 DATE

6-29-16
PLANS APPROVAL DATE

REGISTERED PROFESSIONAL ENGINEER LINAN WANG No. 54714 Exp. 12-31-17 CIVIL STATE OF CALIFORNIA

The State of California or its officers or agents shall not be responsible for the accuracy or completeness of scanned copies of this plan sheet.

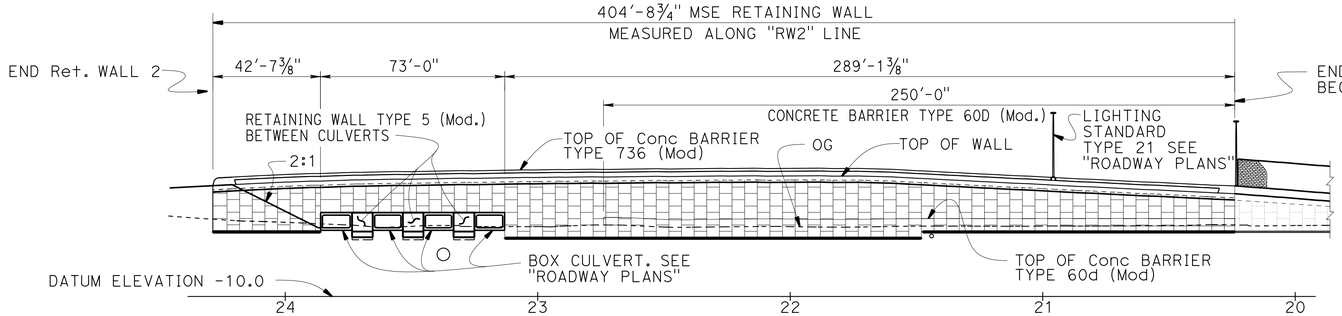

DEVELOPED MIRROR ELEVATION

1" = 30'

CURVE DATA				
	R	Δ	T	L
①	1000.00'	2°04'22.00"	18.09'	36.18'
②	1000.00'	3°38'55"	31.85'	63.68'
③	230.48'	31°02'57.50"	64.03'	124.90'
④	233.07'	32°21'13.91"	67.61'	131.61'
⑤	136.22'	25°48'22.30"	31.21'	61.35'

QUANTITIES

REMOVE SOUND WALL (PORTION), LOCATION B	LUMP	SUM
REMOVE CONCRETE BARRIER (PORTION), LOCATION B	LUMP	SUM
STRUCTURE EXCAVATION (RETAINING WALL)	92	CY
STRUCTURE BACKFILL (RETAINING WALL)	136	CY
MECHANICALLY STABILIZED EMBANKMENT, LOCATION B	7,695	SQFT
STRUCTURAL CONCRETE, RETAINING WALL	48	CY
STRUCTURAL CONCRETE, BARRIER SLAB	208	CY
CONCRETE SURFACE TEXTURE (SEQUOIA TREE MOTIF)	185	SQFT
BAR REINFORCING STEEL (RETAINING WALL)	9,080	LB
CONCRETE BARRIER (TYPE 60D MODIFIED)	250	LF
CONCRETE BARRIER (TYPE 736 MODIFIED)	405	LF

NOTE:
Structure beyond R/W Line

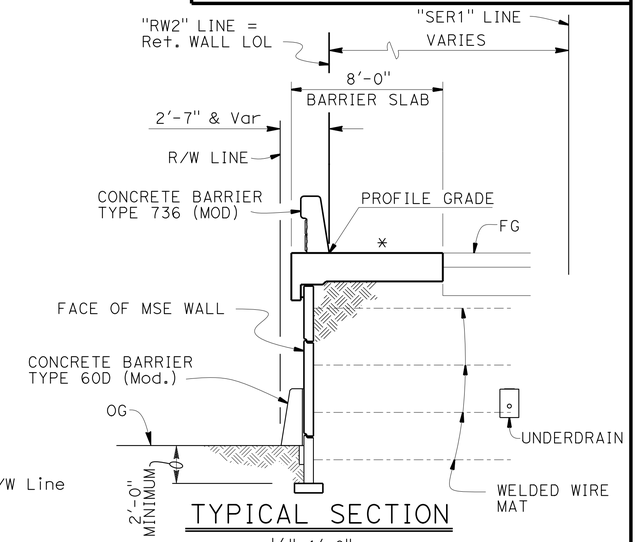

TYPICAL SECTION

¼"=1'-0"

* Match Roadway Cross Slope

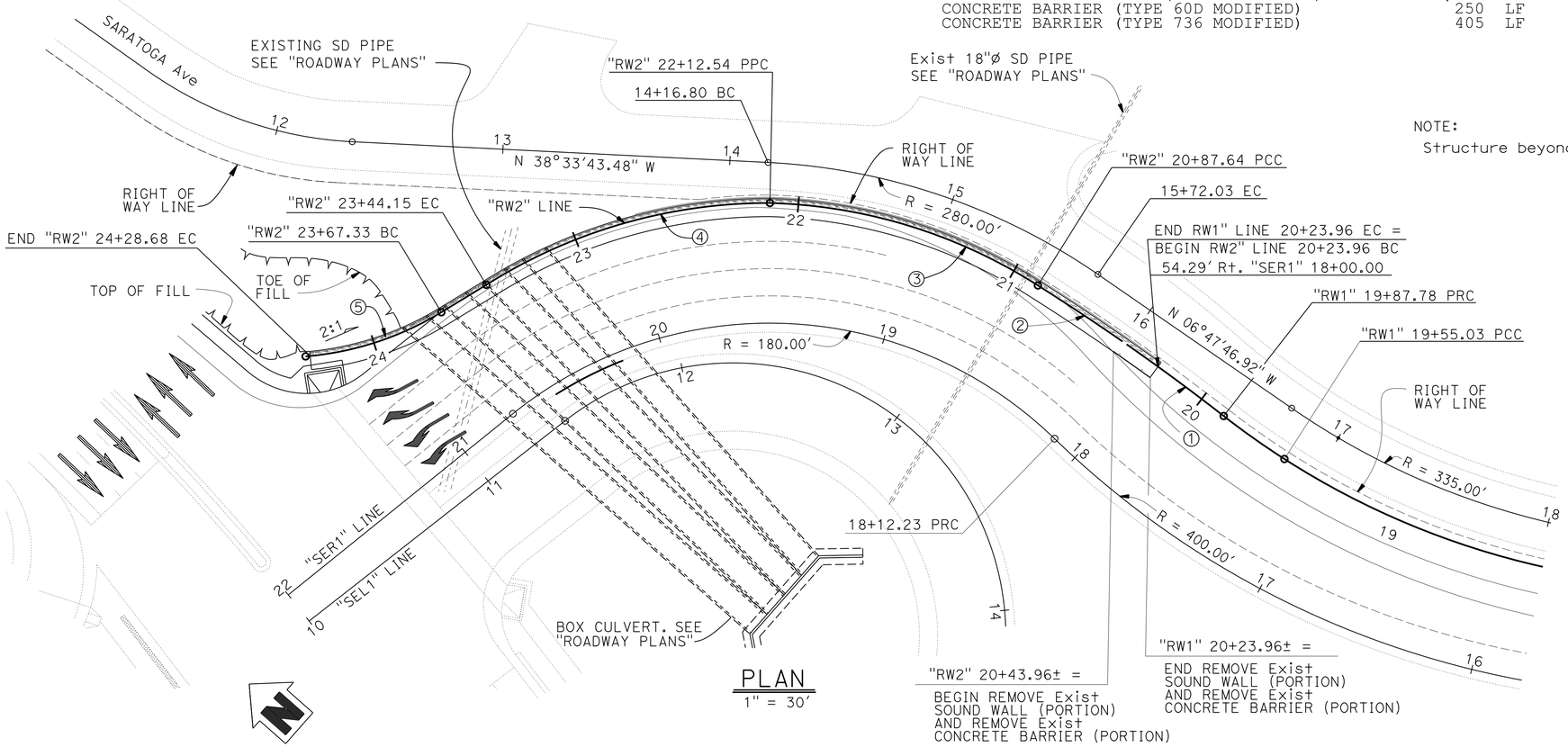

PLAN

1" = 30'

Standard Plan Sheet No.

Detail No.

INDEX TO PLANS

SHT NO.	TITLE
1.	GENERAL PLAN
2.	STRUCTURE PLAN NO. 1
3.	STRUCTURE PLAN NO. 2
4.	FOUNDATION PLAN
5.	MISCELLANEOUS DETAILS
6.	CONCRETE BARRIER SLAB DETAILS
7.	UNDERDRAIN DETAILS
8.	MECHANICALLY STABILIZED EMBANKMENT DETAILS NO. 1
9.	MECHANICALLY STABILIZED EMBANKMENT DETAILS NO. 2
10.	MECHANICALLY STABILIZED EMBANKMENT DETAILS NO. 3
11.	MECHANICALLY STABILIZED EMBANKMENT DETAILS NO. 4
12.	ARCHITECTURAL DETAILS NO. 1
13.	ARCHITECTURAL DETAILS NO. 2
14.	ARCHITECTURAL DETAILS NO. 3
15.	ARCHITECTURAL DETAILS NO. 4
16.	LOG OF TEST BORINGS

STANDARD PLANS DATED 2010

SHT NO.	TITLE
A10A	ABBREVIATIONS (SHEET 1 OF 2)
A10B	ABBREVIATIONS (SHEET 2 OF 2)
RSP A10F	LEGEND - SOIL (SHEET 1 OF 2)
RSP A10G	LEGEND - SOIL (SHEET 2 OF 2)
RSP A76A	CONCRETE BARRIER TYPE 60
B11-56	CONCRETE BARRIER TYPE 736
RSP ES-6A	ELECTRICAL SYSTEMS (LIGHTING STANDARD, TYPES 15 AND 21)

ROUTE 101/ WILLOW INTERCHANGE
RETAINING WALL 2
GENERAL PLAN

DESIGN	BY Peter Soin	CHECKED Rafael Salazar	LOAD & RESISTANCE FACTOR DESIGN	LIVE LOADING: HL93 W/"LOW-BOY"; PERMIT DESIGN VEHICLE
DETAILS	BY A. Onodera / W. Zhang	CHECKED Rafael Salazar	LAYOUT	BY Peter Soin / CHECKED Linan Wang
QUANTITIES	BY Peter Soin	CHECKED Rafael Salazar	SPECIFICATIONS	BY Sirisha Nelapatia / PLANS AND SPECS COMPARED Linan Wang

X
DESIGN ENGINEER

ORIGINAL SCALE IN INCHES FOR REDUCED PLANS 0 1 2 3

STATE OF CALIFORNIA
DEPARTMENT OF TRANSPORTATION

DIVISION OF ENGINEERING SERVICES
STRUCTURE DESIGN
DESIGN BRANCH 4

BRIDGE NO. 35E0049
POST MILE 1.82-1.90

UNIT: 59-3579
PROJECT NUMBER & PHASE: 04000006804
CONTRACT NO.: 04-235654

DISREGARD PRINTS BEARING EARLIER REVISION DATES
REVISION DATES 11-06-15 11-16-15 10-28-15
SHEET 1 OF 16

USERNAME => s132175 DATE PLOTTED => 17-AUG-2016 TIME PLOTTED => 11:31

STRUCTURES DESIGN GENERAL PLAN SHEET (ENGLISH) (REV.09-01-10)

FILE => 35e0049-a-gp01.dgn

DIST	COUNTY	ROUTE	POST MILES TOTAL PROJECT	SHEET No.	TOTAL SHEETS
04	SM	101,114	1.3/2.5, 5.0/5.3	509	568

REGISTERED CIVIL ENGINEER 11-10-15 DATE

6-29-16
PLANS APPROVAL DATE

REGISTERED PROFESSIONAL ENGINEER LINAN WANG No. 54714 Exp. 12-31-17 CIVIL STATE OF CALIFORNIA

The State of California or its officers or agents shall not be responsible for the accuracy or completeness of scanned copies of this plan sheet.

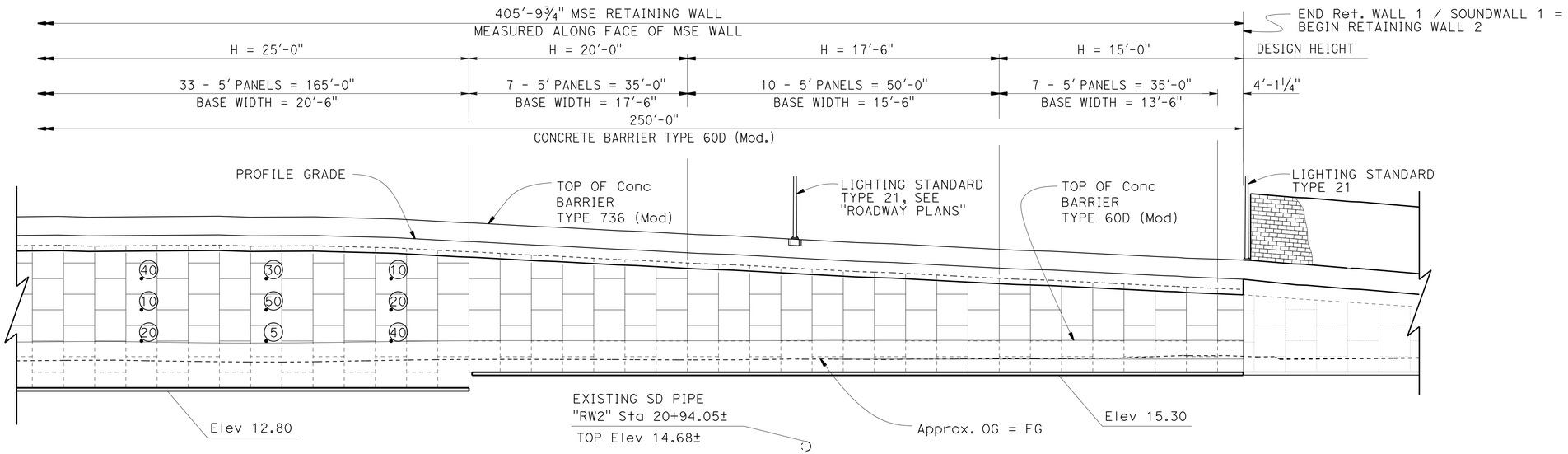

DEVELOPED MIRROR PART ELEVATION

1" = 10'

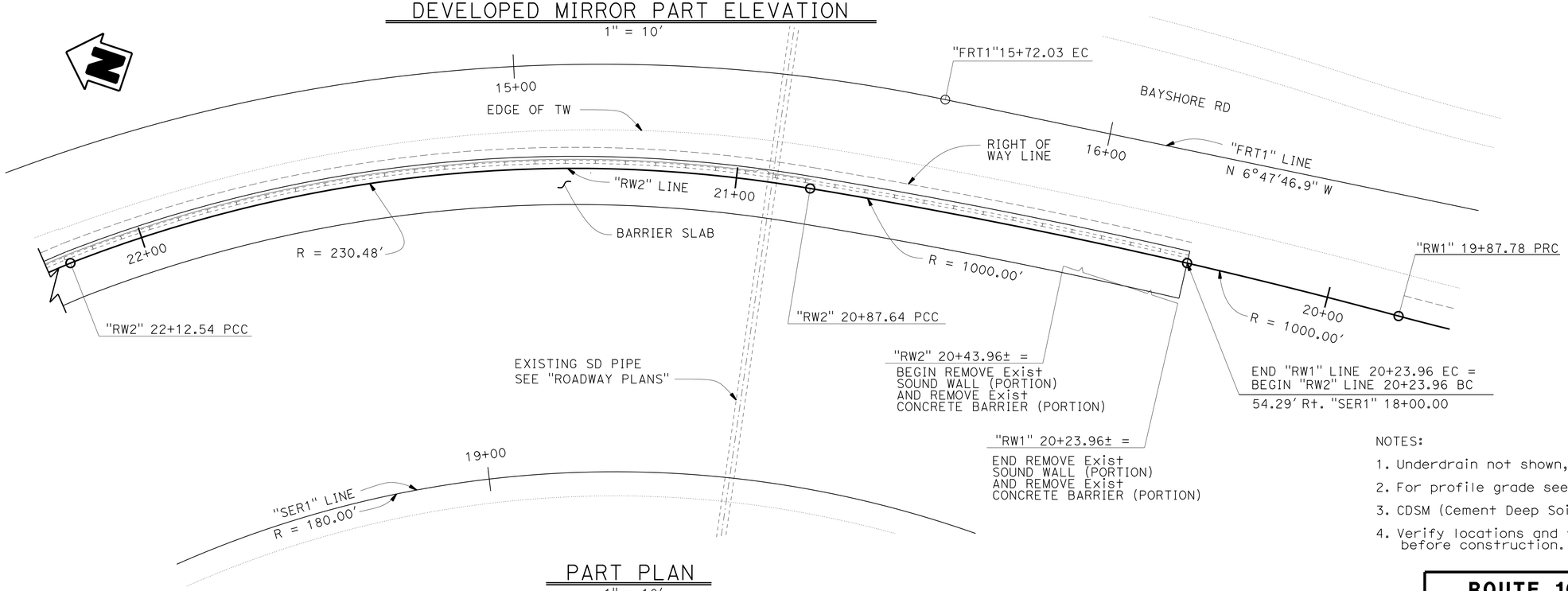

PART PLAN

1" = 10'

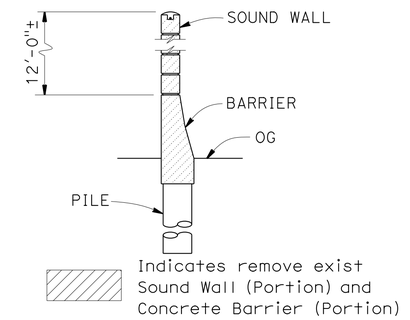

EXISTING SOUND WALL AND CONCRETE BARRIER TO BE REMOVED (PORTION)

⅜" = 1'

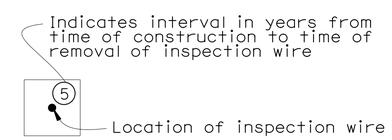

PANEL LEGEND

No Scale

NOTES:

1. Underdrain not shown, see "UNDERDRAIN DETAILS" sheet,
2. For profile grade see "ROADWAY PLANS",
3. CDSM (Cement Deep Soil Mixing) limits, see "ROADWAY PLANS".
4. Verify locations and top elevations of all utility pipes before construction.

	BY	CHECKED
DESIGN	Peter Soin	Rafael Salazar
DETAILS	Jeff Thorne / W. Zhang	Rafael Salazar
QUANTITIES	Peter Soin	Rafael Salazar

STATE OF CALIFORNIA
DEPARTMENT OF TRANSPORTATION

DIVISION OF ENGINEERING SERVICES
STRUCTURE DESIGN
DESIGN BRANCH 4

BRIDGE NO. 35E0049
POST MILE 1.82-1.90

ROUTE 101/ WILLOW INTERCHANGE
RETAINING WALL 2
STRUCTURE PLAN NO. 1

STRUCTURES DESIGN DETAIL SHEET (ENGLISH) (REV. 09-01-10)

ORIGINAL SCALE IN INCHES FOR REDUCED PLANS 0 1 2 3

UNIT: 59-3579
PROJECT NUMBER & PHASE: 04000006804
CONTRACT NO.: 04-235654

DISREGARD PRINTS BEARING EARLIER REVISION DATES

REVISION DATES 11-16-15 11-09-15 10-16-15

SHEET 2 OF 16

FILE => 35e0049-c-sp01.dgn

USERNAME => s132775 DATE PLOTTED => 17-AUG-2016 TIME PLOTTED => 11:31

DIST	COUNTY	ROUTE	POST MILES TOTAL PROJECT	SHEET No.	TOTAL SHEETS
04	SM	101,114	1.3/2.5, 5.0/5.3	510	568

REGISTERED CIVIL ENGINEER 11-10-15 DATE

6-29-16
PLANS APPROVAL DATE

REGISTERED PROFESSIONAL ENGINEER LINAN WANG No. 54714 Exp. 12-31-17 CIVIL STATE OF CALIFORNIA

The State of California or its officers or agents shall not be responsible for the accuracy or completeness of scanned copies of this plan sheet.

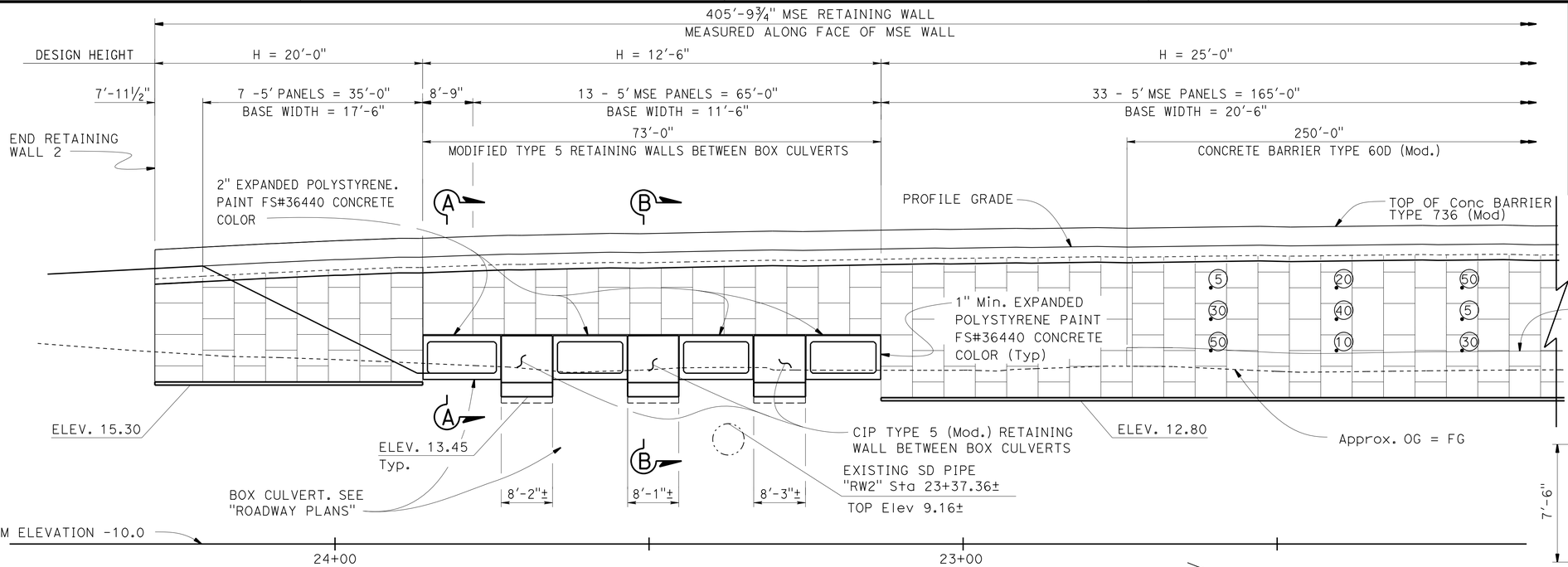

DEVELOPED MIRROR PART ELEVATION

1" = 10'

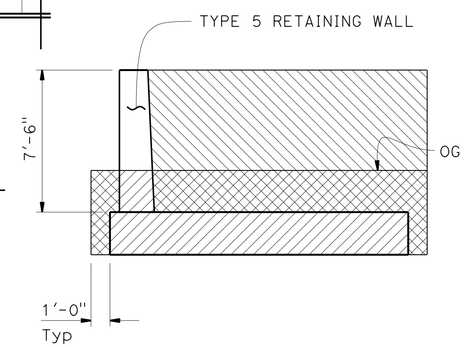

LIMITS OF EXCAVATION AND BACKFILL

NO SCALE

Indicates structure excavation (Retaining Wall)

Indicates structure backfill (Retaining Wall)

Indicates interval in years from time of construction to time of removal of inspection wire

Location of inspection wire

PANEL LEGEND

No Scale

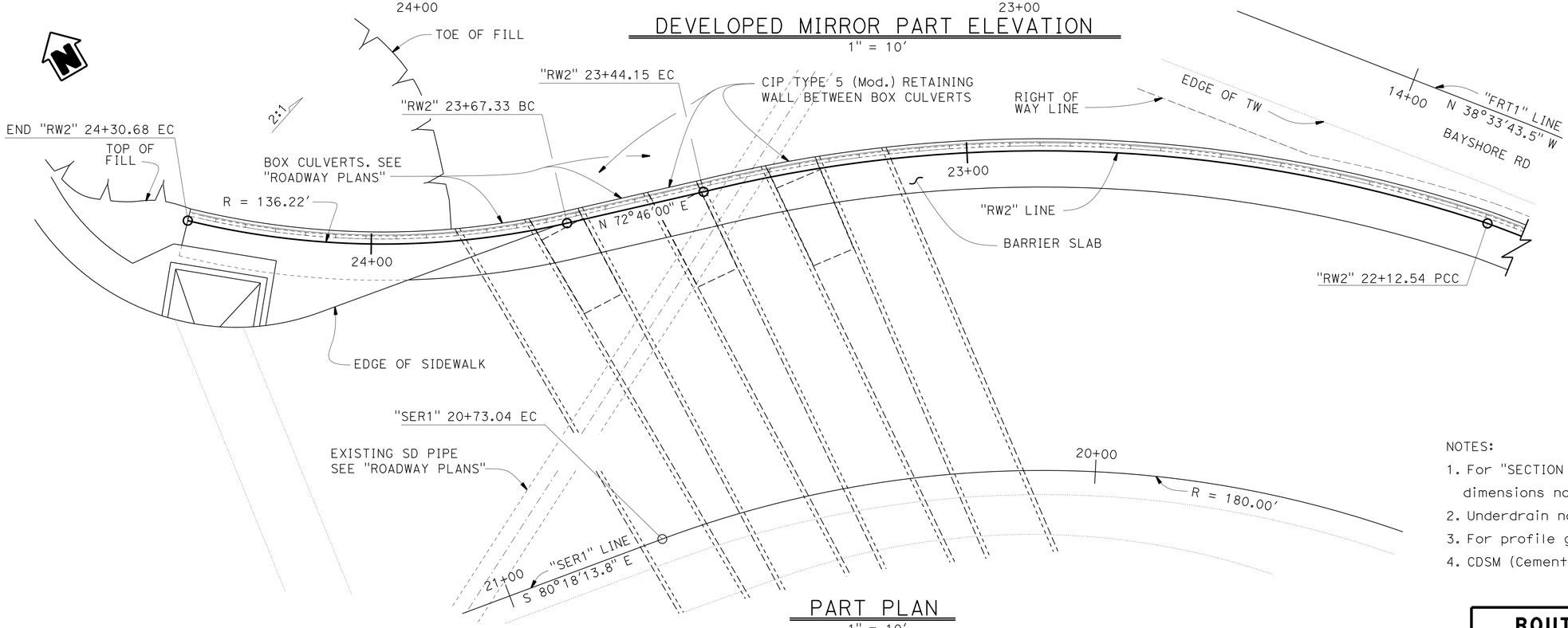

PART PLAN

1" = 10'

NOTES:

1. For "SECTION A-A" and "SECTION B-B" and details and dimensions not shown, see "MISCELLANEOUS DETAILS" sheet.
2. Underdrain not shown, see "UNDERDRAIN DETAILS" sheet,
3. For profile grade see "ROADWAY PLANS",
4. CDSM (Cement Deep Soil Mixing) limites, see "ROADWAY PLANS".

	BY	CHECKED
DESIGN	Peter Soin	Rafael Salazar
DETAILS	Jeff Thorne / W. Zhang	Rafael Salazar
QUANTITIES	Peter Soin	Rafael Salazar

STATE OF CALIFORNIA
DEPARTMENT OF TRANSPORTATION

DIVISION OF ENGINEERING SERVICES
STRUCTURE DESIGN
DESIGN BRANCH 4

BRIDGE NO. 35E0049
POST MILE 1.82-1.90

ROUTE 101/ WILLOW INTERCHANGE
RETAINING WALL 2
STRUCTURE PLAN NO. 2

STRUCTURES DESIGN DETAIL SHEET (ENGLISH) (REV. 09-01-10)

ORIGINAL SCALE IN INCHES FOR REDUCED PLANS 0 1 2 3

UNIT: 59-3579
PROJECT NUMBER & PHASE: 04000006804
CONTRACT NO.: 04-235654

DISREGARD PRINTS BEARING EARLIER REVISION DATES

REVISION DATES: 11-05-15 11-16-15 10-16-15

SHEET 3 OF 16

FILE => 35e0049-c-sp02.dgn

USERNAME => s132775 DATE PLOTTED => 17-AUG-2016 TIME PLOTTED => 11:31

DIST	COUNTY	ROUTE	POST MILES TOTAL PROJECT	SHEET No.	TOTAL SHEETS
04	SM	101,114	1.3/2.5, 5.0/5.3	511	568

REGISTERED CIVIL ENGINEER 11-10-15 DATE

6-29-16
PLANS APPROVAL DATE

REGISTERED PROFESSIONAL ENGINEER LINAN WANG No. 54714 Exp. 12-31-17 CIVIL STATE OF CALIFORNIA

The State of California or its officers or agents shall not be responsible for the accuracy or completeness of electronic copies of this plan sheet.

CURVE DATA

No. ®	R	Δ	T	L
12	335.00	35°16′25″	106.50	206.24
13	280.00	31°45′56″	79.67	155.24
16	170.00	32°31′05″	49.58	96.48
4	400.00	52°44′04″	198.28	368.16
5	180.00	83°01′55″	159.34	260.85
6	1000.00	03°39′15″	31.90	63.68
7	230.48	30°39′17″	64.03	124.90
8	233.07	32°21′14″	67.61	131.61
9	136.22	25°48′22″	31.21	61.35
17	120.00	102°49′55″	150.41	215.37
18	120.00	102°49′55″	150.41	215.37
19	1000.00	02°04′22″	18.09	36.18
20	354.00	39°30′33″	127.13	244.11

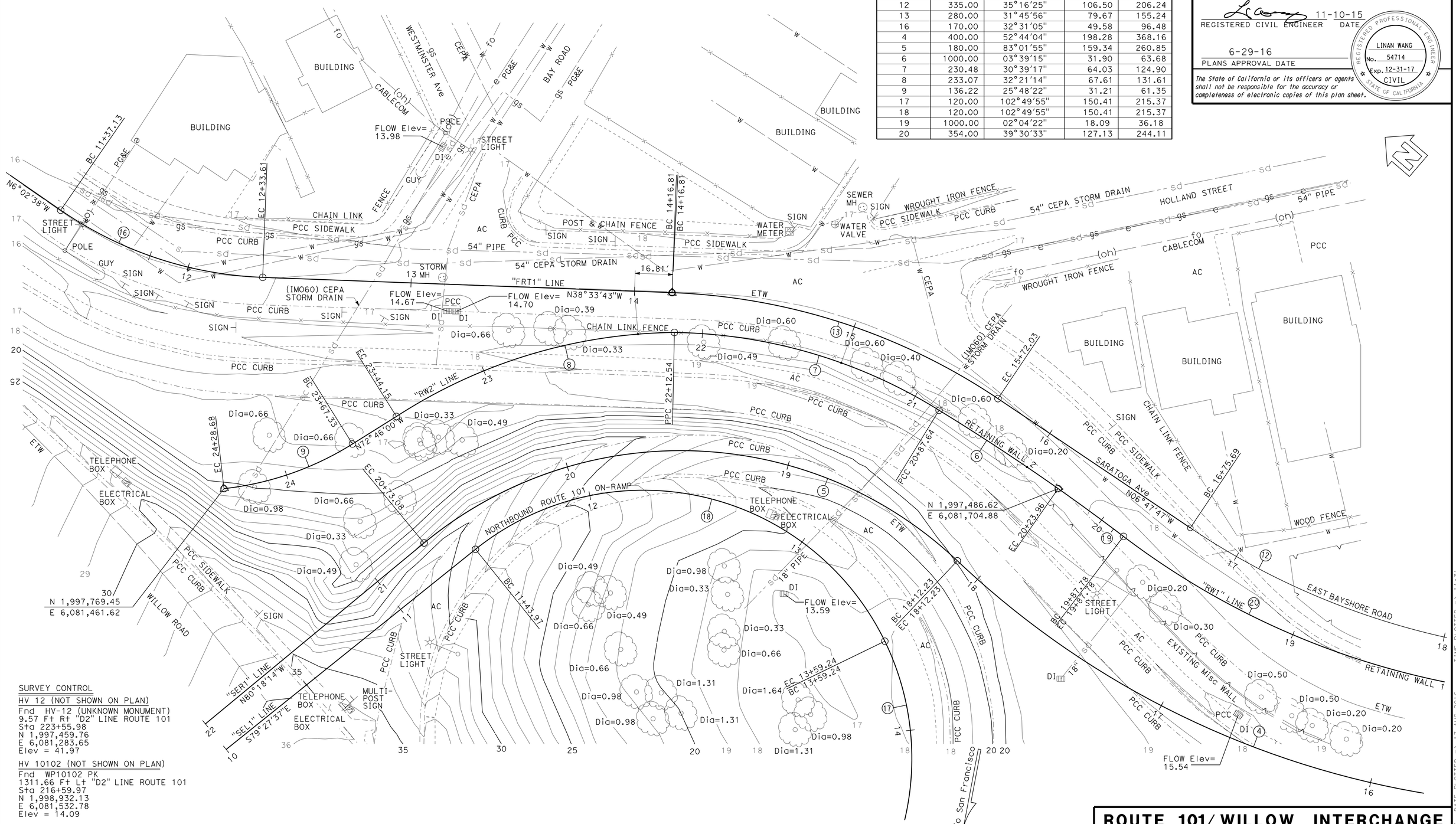

SURVEY CONTROL

HV 12 (NOT SHOWN ON PLAN)
Fnd HV-12 (UNKNOWN MONUMENT)
9.57 Ft Rt "D2" LINE ROUTE 101
Sta 223+55.98
N 1,997,459.76
E 6,081,283.65
Elev = 41.97

HV 10102 (NOT SHOWN ON PLAN)
Fnd WP10102 PK
1311.66 Ft Lt "D2" LINE ROUTE 101
Sta 216+59.97
N 1,998,932.13
E 6,081,532.78
Elev = 14.09

ROUTE 101/ WILLOW INTERCHANGE
RETAINING WALL 2
FOUNDATION PLAN

PRELIMINARY INVESTIGATION SECTION

SCALE 1"=20′	VERT.DATUM NGVD29	PHOTOGRAMMETRY AS OF: X		
	HORZ.DATUM NAD83 (1991.35)	SURVEYED	BY DISTRICT	CHECKED BY C. FASSETT 01/2015
ALIGNMENT TIES Dist TRAVERSE SHEET		DRAFTED	BY T. ZOLNIKOV 01/2015	CHECKED BY L. LEW 01/2015

DESIGN	BY Peter Soin	CHECKED Rafael Salazar
DETAILS	BY Jeff Thorne / W. Zhang	CHECKED Rafael Salazar
QUANTITIES	BY Peter Soin	CHECKED Rafael Salazar

STATE OF CALIFORNIA
DEPARTMENT OF TRANSPORTATION

DIVISION OF ENGINEERING SERVICES
STRUCTURE DESIGN
DESIGN BRANCH 4

BRIDGE NO. 35E0049
POST MILE 1.60-2.20

STRUCTURES FOUNDATION PLAN SHEET (ENGLISH) (REV. 09-01-10)

ORIGINAL SCALE IN INCHES FOR REDUCED PLANS 0 1 2 3

UNIT: 3646
PROJECT NUMBER & PHASE: 0400000680 4 CONTRACT NO.: 04-235654

SUBMITTAL DATE	REVISION DATES				SHEET	OF
03/24/15	11/16/15				4	16

FILE => 35e0049-e-fpl01.dgn

USERNAME => s132175 DATE PLOTTED => 17-AUG-2016 TIME PLOTTED => 11:31

DIST	COUNTY	ROUTE	POST MILES TOTAL PROJECT	SHEET No.	TOTAL SHEETS
04	SM	101,114	1.3/2.5, 5.0/5.3	512	568

REGISTERED CIVIL ENGINEER 11-10-15 DATE

6-29-16
PLANS APPROVAL DATE

REGISTERED PROFESSIONAL ENGINEER LINAN WANG No. 54714 Exp. 12-31-17 CIVIL STATE OF CALIFORNIA

The State of California or its officers or agents shall not be responsible for the accuracy or completeness of scanned copies of this plan sheet.

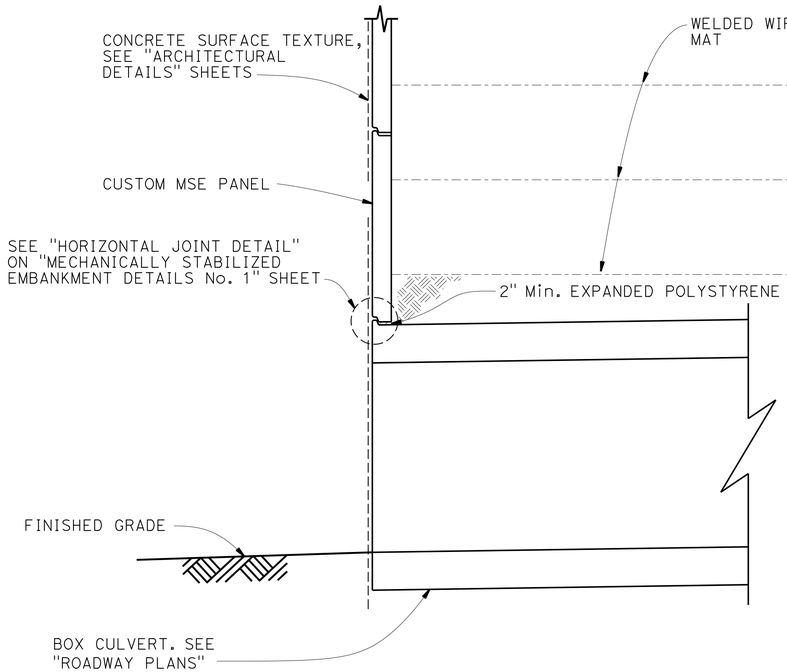

SECTION A-A
1/2" = 1'-0"

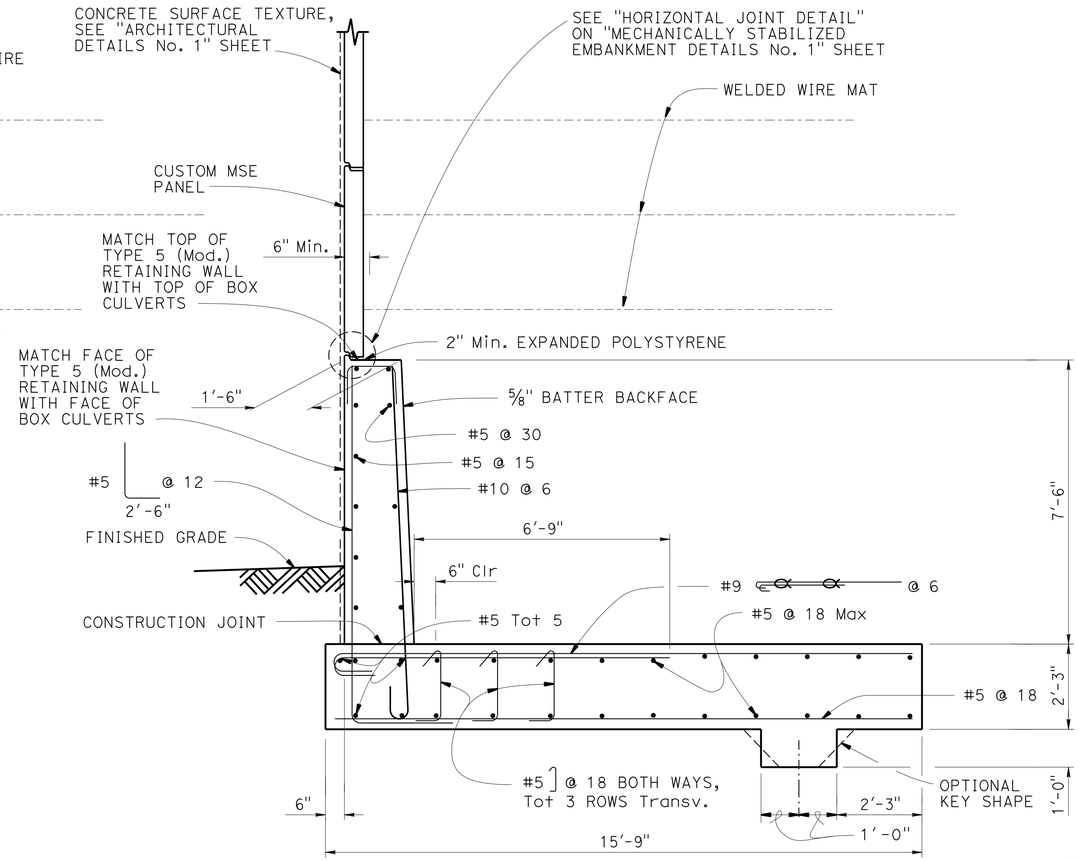

SECTION B-B
1/2" = 1'-0"

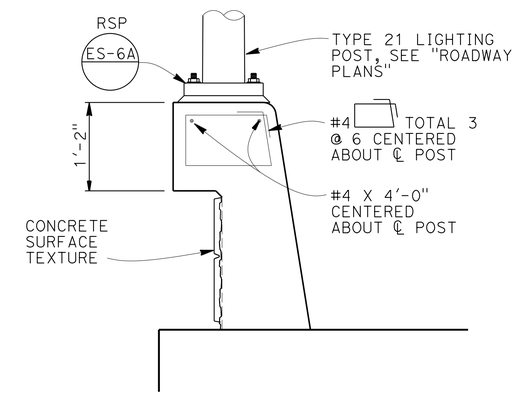

SECTION C-C

Note: The reinforcing shown is additional to the rebars in Concrete Barrier Type 736 (Mod).

STEEL SOIL REINFORCEMENT FOR CASE LOAD 1

DESIGN HIGHT (H)	12'-6"	15'-0"	17'-6"	20'-0"	25'-0"
BASE WIDTH (L)	11'-6"	13'-6"	15'-6"	17'-6"	20'-6"
	Top 4-W15xW15@6	Top 4-W15xW15@6	Top 4-W15xW15@6	Top 4-W15xW15@6	Top 4-W15xW15@6
	3 of 4-W15xW15@6	3 of 4-W15xW15@6	4 of 4-W15xW15@6	4 of 4-W15xW15@18	4 of 4-W15xW15@18
	Bot. 4-W20xW15@9	1 of 4-W20xW15@9	1 of 4-W20xW15@9	2 of 4-W20xW15@24	3 of 4-W20xW15@24
		Bot. 4-W20xW15@9	Bot. 4-W20xW15@9	Bot. 4-W20xW15@24	1 of 6-W25xW15@24
					Bot. 6-W25xW15@24

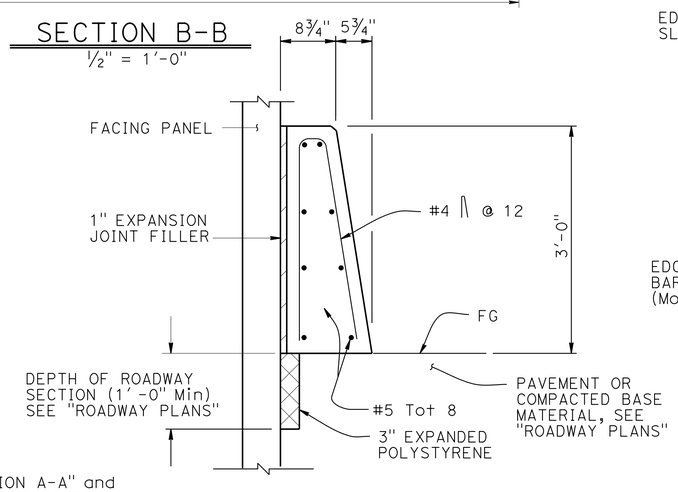

CONCRETE BARRIER TYPE 60D (MOD) AT FACE OF MSE
1" = 1'-0"

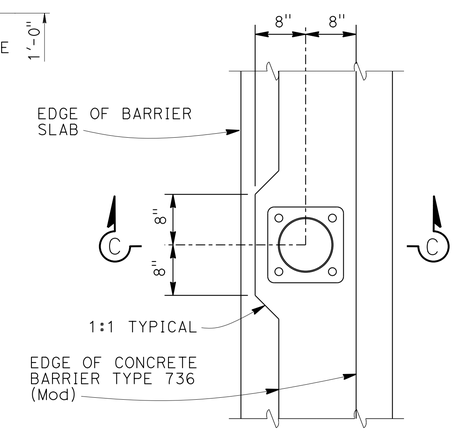

PLAN

PEDESTAL DETAILS
1" = 1'-0"

NOTE

For locations of "SECTION A-A" and "SECTION B-B", see "STRUCTURE PLAN NO. 2" SHEET.

	BY	CHECKED
DESIGN	Peter Soin	Rafael Salazar
DETAILS	Jeff Thorne	Rafael Salazar
QUANTITIES	Peter Soin	Rafael Salazar

STATE OF CALIFORNIA
DEPARTMENT OF TRANSPORTATION

DIVISION OF ENGINEERING SERVICES
STRUCTURE DESIGN
DESIGN BRANCH 4

BRIDGE NO. 35E0049
POST MILE 1.82-1.90

ROUTE 101/ WILLOW INTERCHANGE
RETAINING WALL 2
MISCELLANEOUS DETAILS

STRUCTURES DESIGN DETAIL SHEET (ENGLISH) (REV. 09-01-10)

ORIGINAL SCALE IN INCHES FOR REDUCED PLANS 0 1 2 3

UNIT: 59-3579
PROJECT NUMBER & PHASE: 04000006804
CONTRACT NO.: 04-235654

DISREGARD PRINTS BEARING EARLIER REVISION DATES

REVISION DATES 11-05-15 11-16-15 10-5-15

SHEET 5 OF 16

FILE => 35e0049-u-mscdts01.dgn

USERNAME => s132175 DATE PLOTTED => 17-AUG-2016 TIME PLOTTED => 11:31

DIST	COUNTY	ROUTE	POST MILES TOTAL PROJECT	SHEET No.	TOTAL SHEETS
04	SM	101,114	1.3/2.5, 5.0/5.3	513	568

REGISTERED CIVIL ENGINEER 11-10-15 DATE

6-29-16
PLANS APPROVAL DATE

REGISTERED PROFESSIONAL ENGINEER LINAN WANG No. 54714 Exp. 12-31-17 CIVIL STATE OF CALIFORNIA

The State of California or its officers or agents shall not be responsible for the accuracy or completeness of electronic copies of this plan sheet.

DESIGN DATA

DESIGN: AASHTO LRFD Bridge Design Specifications, 4th Edition with California Amendments.

WS: 33 psf on sound wall

F_t : 54 kips on barrier

EQE: $k_h = 0.2$
$k_v = 0.0$

REINFORCED CONCRETE: f'c = 3600 psi

fy = 60 ksi

n = 8

NOTES:

1. Clearance to reinforcing steel in concrete barrier to be 1".
2. Not all barrier reinforcement shown.
3. No expansion joints in concrete barrier or barrier slab within wall limits.
4. ◇1 Use Concrete Barrier Type 736 (Mod)
5. Sound Wall not permitted on MSE walls unless supported by a CIDH pile foundation. (See "Mechanically Stabilized Embankment Detail No. 5" sheet).
6. Install cable railing or chain link railing when indicated in Project Plans. Refer to Standard Plans B11-7 and B11-47 for anchorage details to top of concrete barrier.
7. Minimum slab length: 40 ft

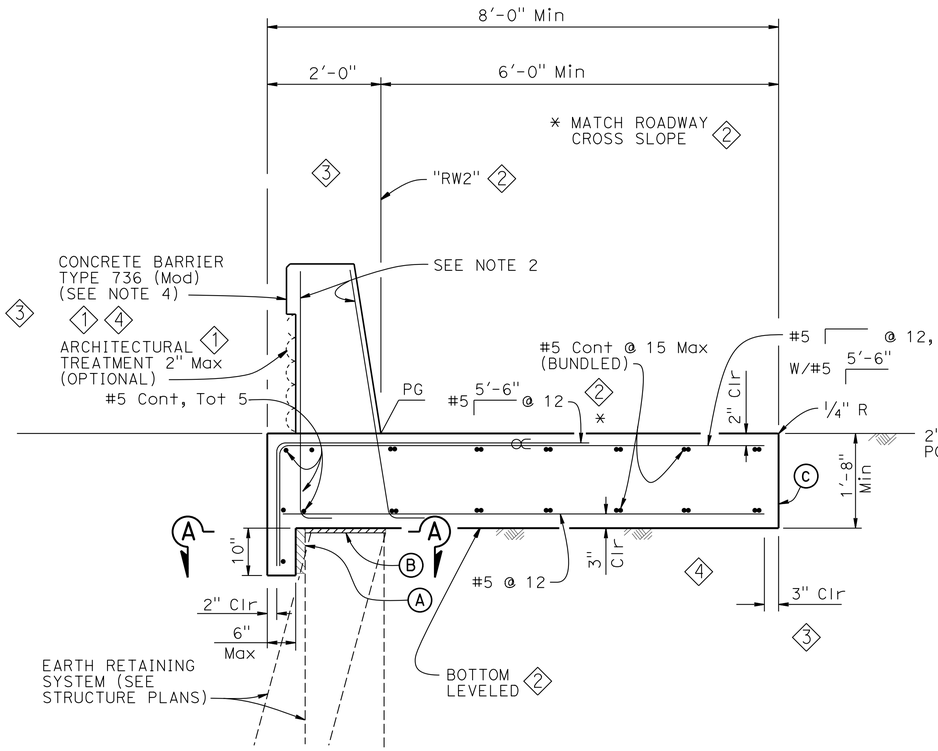

CONCRETE BARRIER SLAB

3/4" = 1'-0"

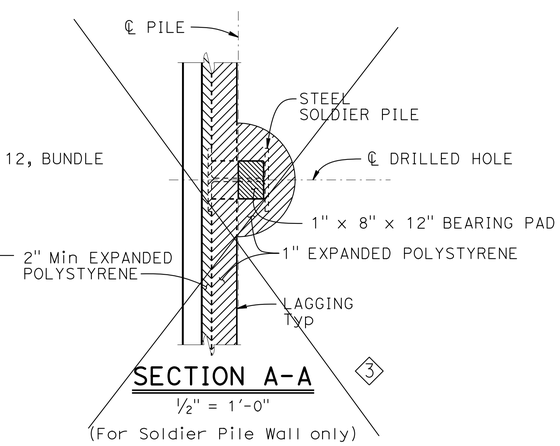

SECTION A-A

1/2" = 1'-0"

(For Soldier Pile Wall only)

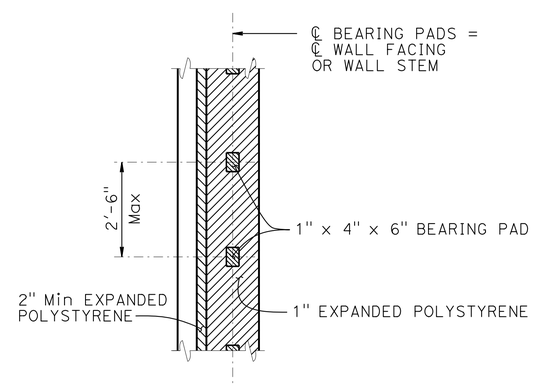

SECTION A-A

1/2" = 1'-0"

(For all other Earth Retaining Systems)

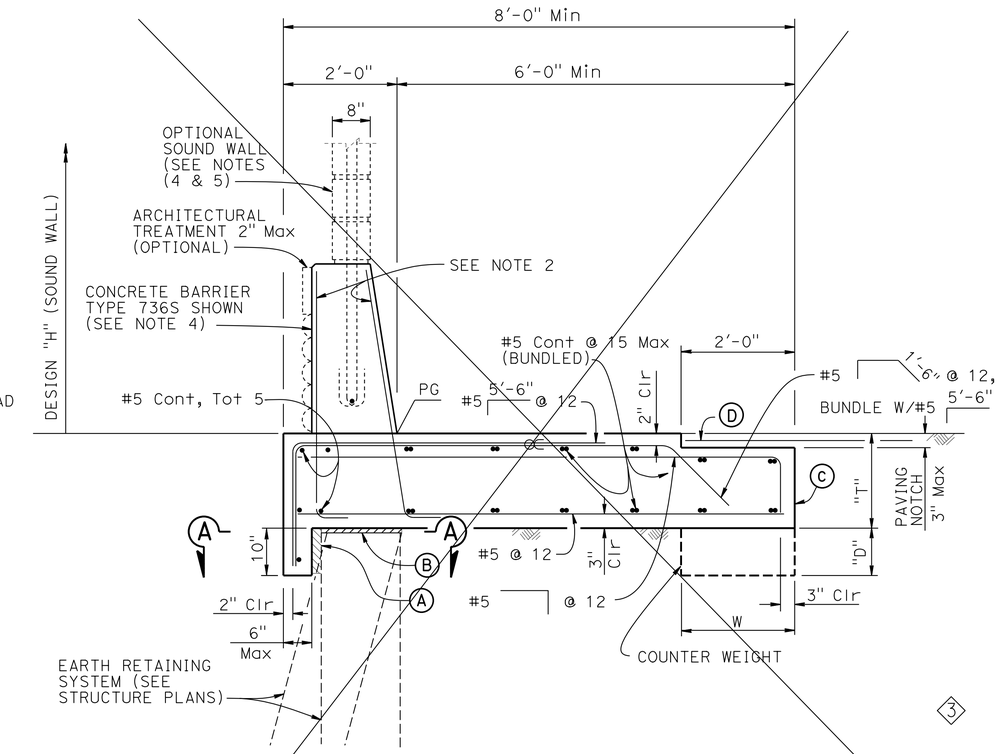

CONCRETE BARRIER SLAB WITH PAVING NOTCH

3/4" = 1'-0"

BARRIER SLAB DIMENSIONS ◇3

DESIGN "H" OF SOUND WALL	NO SW	12'-4"	14'-4"	16'-4"
BARRIER TYPE	732 736 742	736 S	736 S	736 S
T	1'-8"	1'-8"	2'-0"	2'-0"
W	N/A	N/A	N/A	2'-0"
D	N/A	N/A	N/A	0'-9"

NOTES:

(A) 2" Min Expanded polystyrene

◇3 (B) 1" Expanded Polystyrene on MSE and concrete stem walls, See "SECTION A-A". ~~for Soldier Pile Walls~~

(C) Contact joint

◇5 ~~(D) 4'-0" wide pavement reinforcing fabric~~

∝ Indicates bundled bars

STANDARD DRAWING

FILE NO. xs12-090

APPROVAL DATE July 2014

◇1 Revised Note ◇3 Deleted Detail ◇5 Deleted Note
◇2 Added Note ◇4 Revised Detail

STATE OF CALIFORNIA DEPARTMENT OF TRANSPORTATION

DIVISION OF ENGINEERING SERVICES

BRIDGE NO. 35E0049
POST MILE 1.82-1.90

ROUTE 101/ WILLOW INTERCHANGE
RETAINING WALL 2
CONCRETE BARRIER SLAB DETAILS

DS OSD 2147A (ENGLISH STANDARD DRAWING "XS" BORDER REV. (02-02-11)

ORIGINAL SCALE IN INCHES FOR REDUCED PLANS 0 1 2 3

UNIT: 59-3579
PROJECT NUMBER & PHASE: 04000006804
CONTRACT NO.: 04-235654

DISREGARD PRINTS BEARING EARLIER REVISION DATES

REVISION DATES 6-24-14 8-24-15

SHEET 6 OF 16

FILE => 35e0049-w-xs12-090.dgn

USERNAME => s132175 DATE PLOTTED => 17-AUG-2016 TIME PLOTTED => 11:31

DIST	COUNTY	ROUTE	POST MILES TOTAL PROJECT	SHEET No.	TOTAL SHEETS
04	SM	101,114	1.3/2.5, 5.0/5.3	514	568

REGISTERED CIVIL ENGINEER 11-10-15 DATE

6-29-16
PLANS APPROVAL DATE

REGISTERED PROFESSIONAL ENGINEER LINAN WANG No. 54714 Exp. 12-31-17 CIVIL STATE OF CALIFORNIA

The State of California or its officers or agents shall not be responsible for the accuracy or completeness of scanned copies of this plan sheet.

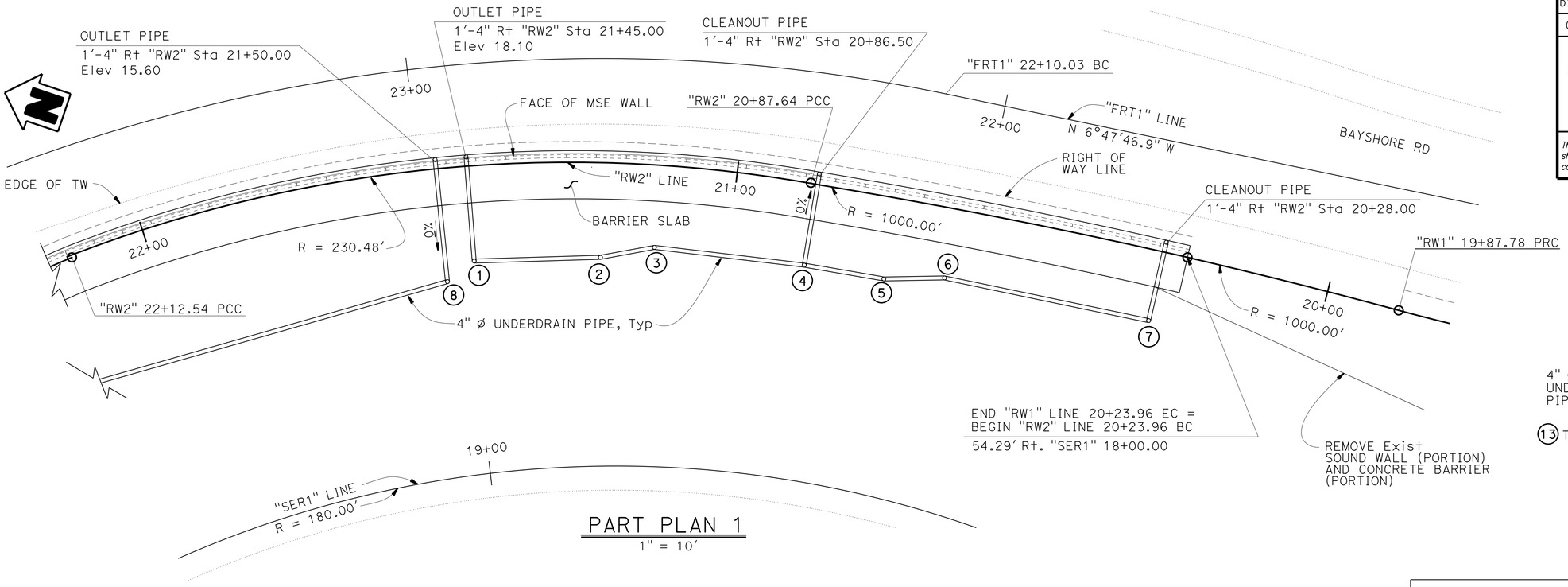

PART PLAN 1
1" = 10'

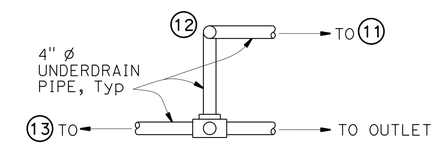

DETAIL "A"
NO SCALE

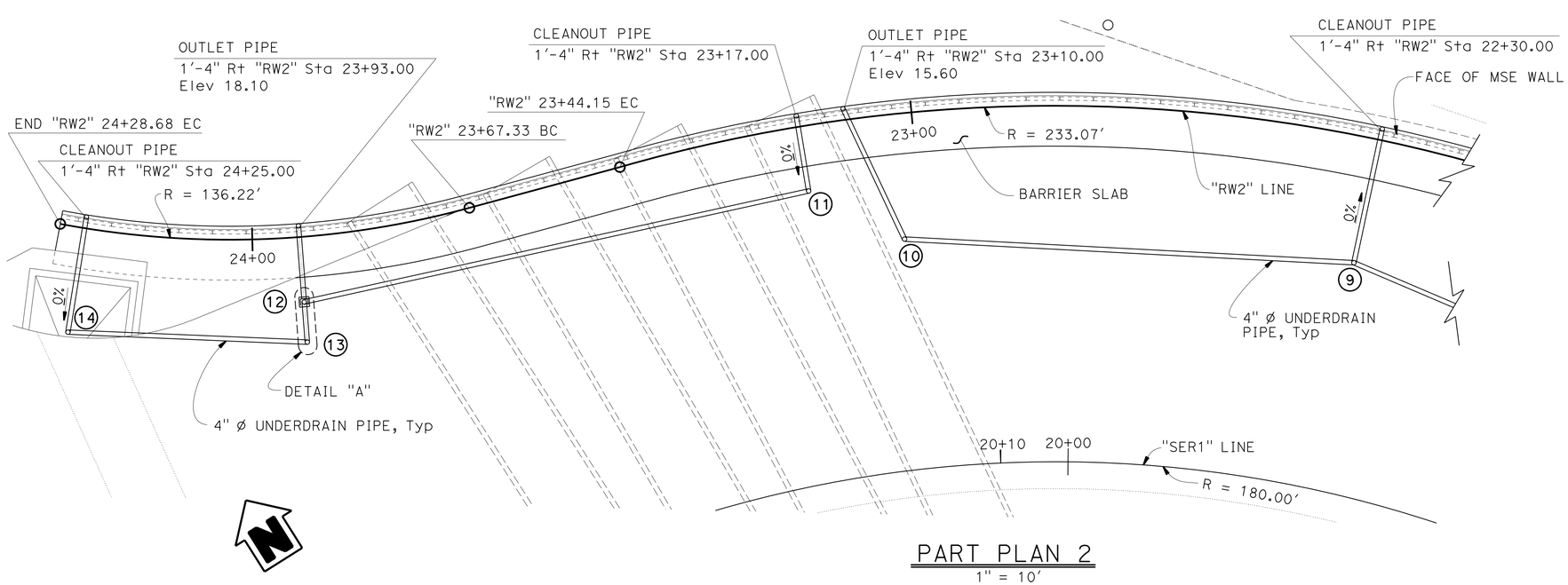

PART PLAN 2
1" = 10'

UNDERDRAIN DATA		
NOTE	OFFSET	ELEVATION
1	15'-8" Lt "RW2" Sta 21+45.00	18.60
2	15'-8" Lt "RW2" Sta 21+22.46	19.30
3	13'-8" Lt "RW2" Sta 21+13.00	19.60
4	13'-8" Lt "RW2" Sta 20+86.50	20.40
5	13'-8" Lt "RW2" Sta 20+73.00	19.90
6	11'-8" Lt "RW2" Sta 20+63.00	19.60
7	11'-8" Lt "RW2" Sta 20+28.00	18.50
8	18'-8" Lt "RW2" Sta 21+50.00	16.20
9	18'-8" Lt "RW2" Sta 22+30.00	18.70
10	18'-8" Lt "RW2" Sta 23+02.97	16.30
11	9'-8" Lt "RW2" Sta 23+17.00	25.80
12	9'-8" Lt "RW2" Sta 23+93.00	23.52
13	15'-8" Lt "RW2" Sta 23+93.00	18.60
14	15'-8" Lt "RW2" Sta 24+25.00	19.60

NOTES:
1. For soil reinforcement, see "MISCELLANEOUS DETAILS" sheet.
2. For CDSM (Cement Deep Soil Mixing) Limits, see "ROADWAY PLANS'.

	BY	CHECKED
DESIGN	Peter Soin	Rafael Salazar
DETAILS	Wei Zhang	Rafael Salazar
QUANTITIES	Peter Soin	Rafael Salazar

STATE OF CALIFORNIA
DEPARTMENT OF TRANSPORTATION

DIVISION OF ENGINEERING SERVICES
STRUCTURE DESIGN
DESIGN BRANCH 4

BRIDGE NO. 35E0049
POST MILE 1.82-1.90

ROUTE 101/WILLOW INTERCHANGE
RETAINING WALL 2
UNDERDRAIN DETAILS

STRUCTURES DESIGN DETAIL SHEET (ENGLISH) (REV. 09-01-10)

ORIGINAL SCALE IN INCHES FOR REDUCED PLANS 0 1 2 3

UNIT: 59-3579
PROJECT NUMBER & PHASE: 04000006804
CONTRACT NO.: 04-235654

DISREGARD PRINTS BEARING EARLIER REVISION DATES

REVISION DATES: 11-16-15 | 9-30-15 | 11-05-15

SHEET 7 OF 16

FILE => 35e0049-x-ddet01.dgn

USERNAME => s132775 DATE PLOTTED => 17-AUG-2016 TIME PLOTTED => 11:31

DIST	COUNTY	ROUTE	POST MILES TOTAL PROJECT	SHEET No.	TOTAL SHEETS
04	SM	101,114	1.3/2.5, 5.0/5.3	515	568

REGISTERED CIVIL ENGINEER 11-10-15 DATE

6-29-16
PLANS APPROVAL DATE

The State of California or its officers or agents shall not be responsible for the accuracy or completeness of electronic copies of this plan sheet.

REGISTERED PROFESSIONAL ENGINEER — LINAN WANG No. 54714 Exp. 12-31-17 CIVIL — STATE OF CALIFORNIA

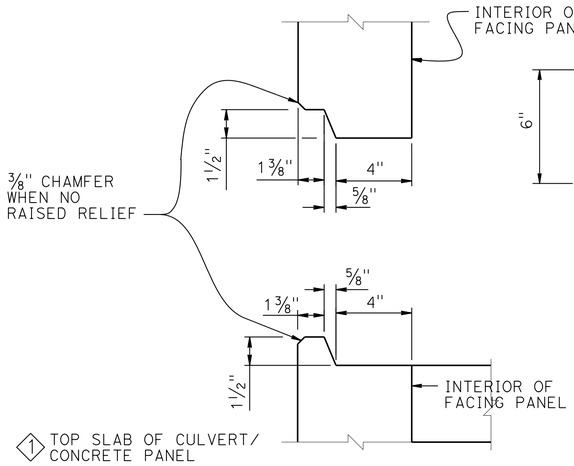

HORIZONTAL JOINT DETAIL

3" = 1'-0"

1 NOTE:
For Concrete Culvert details, see "ROADWAY PLANS".

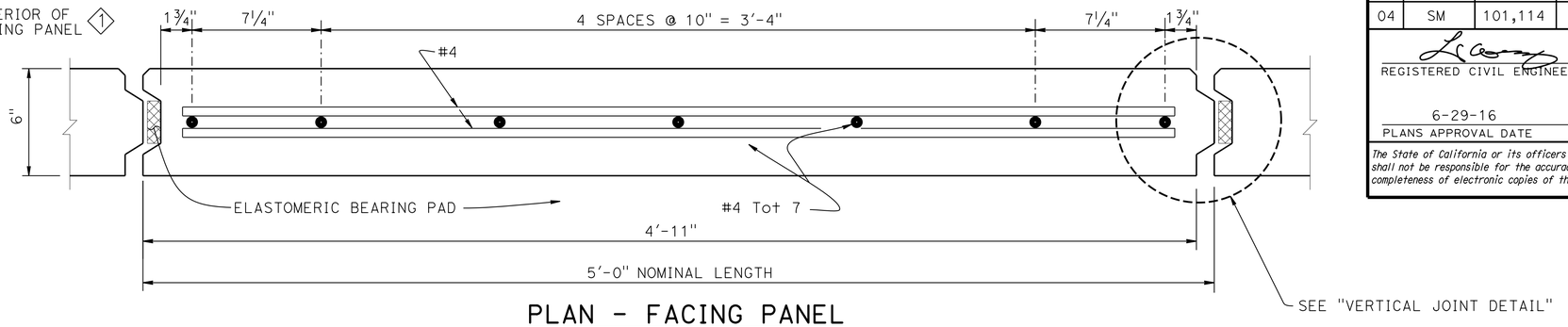

PLAN - FACING PANEL

3" = 1'-0"

NOTES:

1. Architectural treatment not shown
2. Place reinforced elastomeric bearing pads in all of the panel joints between the panels. Place one in each vertical joint where the horizontal joints intersect. Place two per panel in each horizontal joint:
   3/4" x 2 3/8" x 6" for vertical joints
   3/4" x 4" x 6" for horizontal joints
3. Bond a strip of filter fabric, 1'-0" wide, over the full length of all panel joints
4. Top layer of welded wire mats attached parallel to top of panel when top of wall is angled or curved as shown elsewhere in "STRUCTURE PLANS"
5. Eliminate mid level mat when closer than 6" to top mat, continue variable dimension between remaining mats

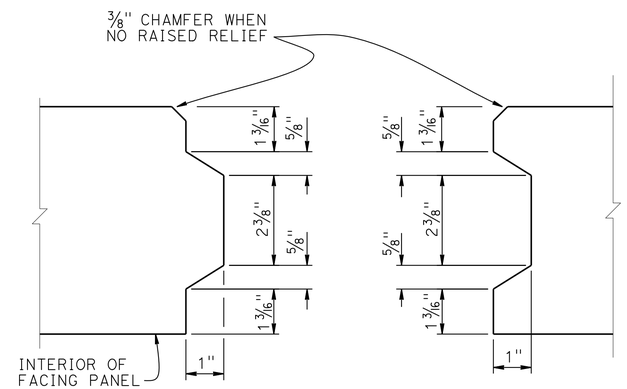

VERTICAL JOINT DETAIL

6" = 1'-0"

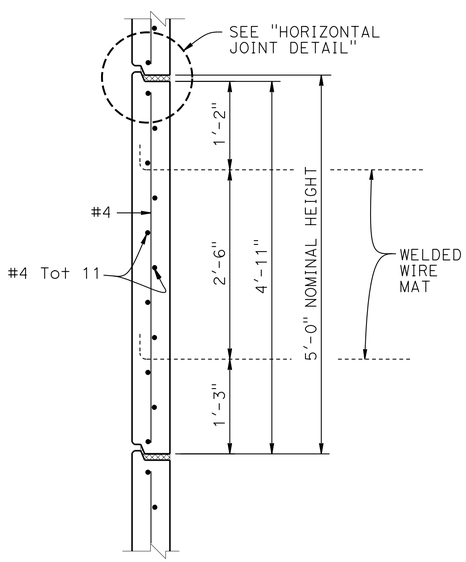

INTERMEDIATE PANEL

1" = 1'-0"

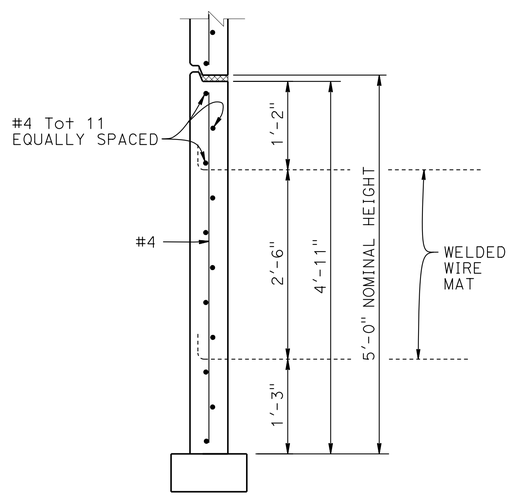

BOTTOM PANEL

1" = 1'-0"

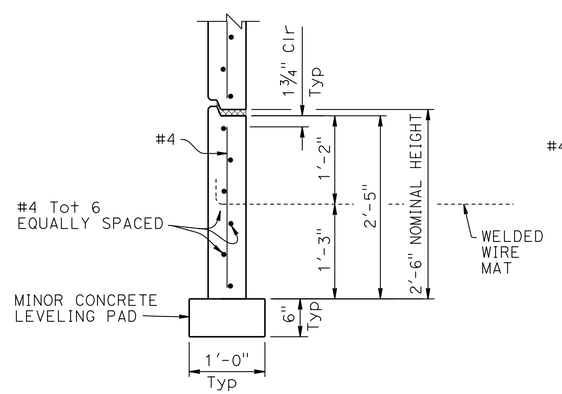

BOTTOM HALF PANEL

1" = 1'-0"

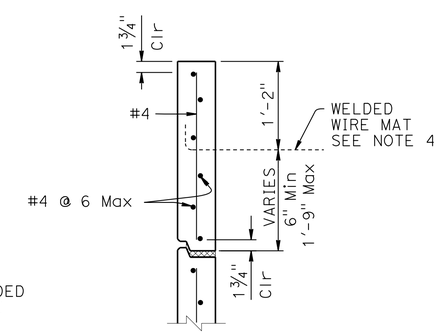

TOP HALF PANEL

1" = 1'-0"

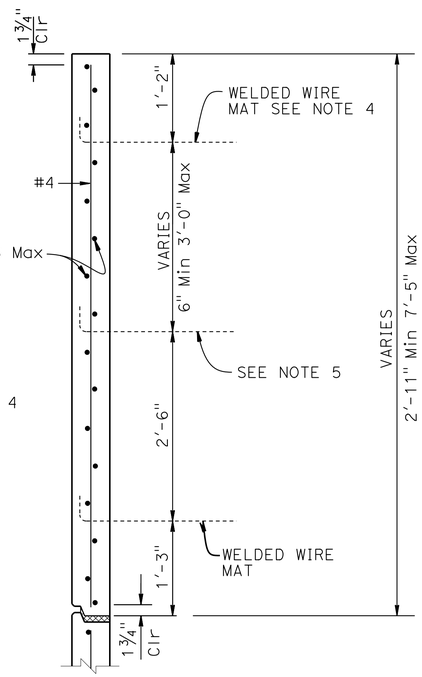

TOP PANEL WITH MULTIPLE MATS

1" = 1'-0"

STANDARD DRAWING

FILE NO. xs13-020-1

APPROVAL DATE July 2014

1 Added Note

STATE OF CALIFORNIA DEPARTMENT OF TRANSPORTATION

DIVISION OF ENGINEERING SERVICES

BRIDGE NO. 35E0049

POST MILE 1.82-1.90

ROUTE 101/ WILLOW INTERCHANGE
RETAINING WALL 2
MECHANICALLY STABILIZED EMBANKMENT
DETAILS No. 1

DS OSD 2147A (ENGLISH STANDARD DRAWING "XS" BORDER REV. (02-02-11)

ORIGINAL SCALE IN INCHES FOR REDUCED PLANS 0 1 2 3

UNIT: 59-3579
PROJECT NUMBER & PHASE: 04000006804
CONTRACT NO.: 04-235654

DISREGARD PRINTS BEARING EARLIER REVISION DATES

REVISION DATES: 2-22-15, 11-05-15

SHEET 8 OF 16

FILE => 35e0049-x-xs13-020-1.dgn

USERNAME => s132175 DATE PLOTTED => 17-AUG-2016 TIME PLOTTED => 11:31

DIST	COUNTY	ROUTE	POST MILES TOTAL PROJECT	SHEET No.	TOTAL SHEETS
04	SM	101,114	1.3/2.5, 5.0/5.3	516	568

REGISTERED CIVIL ENGINEER 11-10-15 DATE

6-29-16
PLANS APPROVAL DATE

REGISTERED PROFESSIONAL ENGINEER
LINAN WANG
No. 54714
Exp. 12-31-17
CIVIL
STATE OF CALIFORNIA

The State of California or its officers or agents shall not be responsible for the accuracy or completeness of electronic copies of this plan sheet.

GENERAL NOTES
LOAD & RESISTANCE FACTOR DESIGN

DESIGN: AASHTO LRFD Bridge Design Specifications, 4th Edition with California Amendments

LIVE LOAD: Surcharge = 240 lb/ft^2

SOIL PARAMETERS:

Internal design ϕ = 34°, γ = 120 lb/ft^3

External design ϕ(Retained Backfill) = 30°, γ = 120 lb/ft^3

ϕ(Foundation) = 30°

K_h = 0.2

PRECAST CONCRETE PANELS:

f'c = 4,000 psi (Concrete compressive strength at 28 days)

fy = 60,000 psi (Yield strength of reinforcement)

SOIL REINFORCEMENT:

Welded wire mats: fy = 65,000 psi (Yield strength)

Coupler: fy = 36,000 psi (Yield strength)

Corrosion rate = 1.1 mils/year

REINFORCED CONCRETE:

f'c = 3,600 psi, except as noted

(Concrete compressive strength at 28 days)

fy = 60,000 psi (Yield strength of reinforcement)

MSE = Mechanically Stabilized Embankment

NOTES:

(A) Distance as required to permit coupler to be swaged

(B) Place #4 x 3'-2", centered on connector mat, but not welded to it

(C) All transverse wires size W15 at various spacing as shown elsewhere in plans

(D) Size of longitudinal wires shown elsewhere in plans

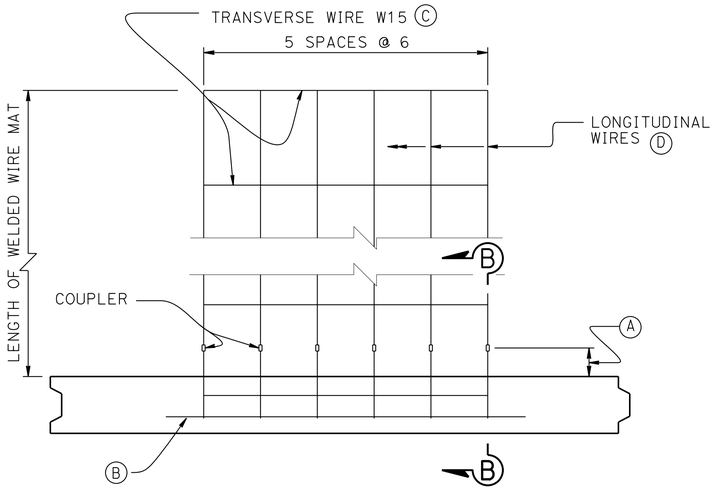

PLAN OF PANEL WITH SIX WIRE MAT

1½" = 1'-0"

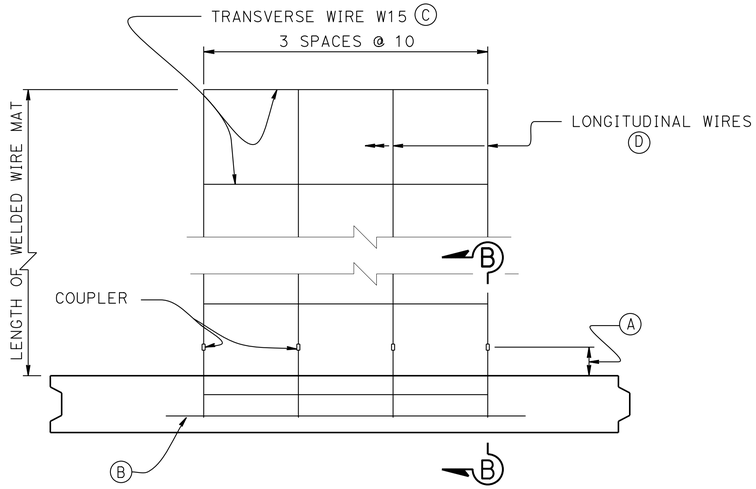

PLAN OF PANEL WITH FOUR WIRE MAT

1½" = 1'-0"

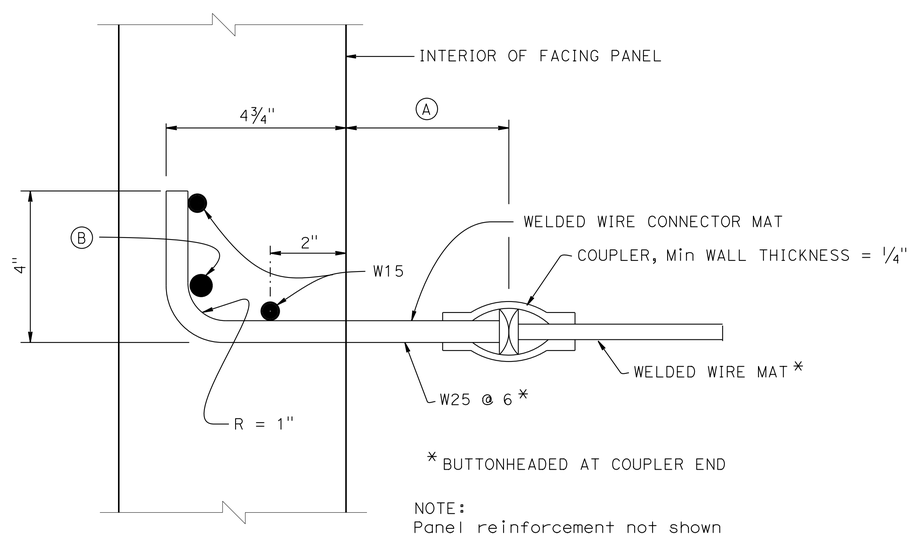

* BUTTONHEADED AT COUPLER END

NOTE:
Panel reinforcement not shown

SECTION B-B

6" = 1'-0"

ROUTE 101/ WILLOW INTERCHANGE

RETAINING WALL 2

MECHANICALLY STABILIZED EMBANKMENT

DETAILS No. 2

STANDARD DRAWING

FILE NO. xs13-020-2

APPROVAL DATE July 2014

STATE OF CALIFORNIA
DEPARTMENT OF TRANSPORTATION

DIVISION OF ENGINEERING SERVICES

BRIDGE NO. 35E0049

POST MILE 1.82-1.90

DS OSD 2147A (ENGLISH STANDARD DRAWING "XS" BORDER REV. (02-02-11)

ORIGINAL SCALE IN INCHES FOR REDUCED PLANS 0 1 2 3

UNIT: 59-3579
PROJECT NUMBER & PHASE: 04000006804
CONTRACT NO.: 04-235654

DISREGARD PRINTS BEARING EARLIER REVISION DATES

REVISION DATES 2-27-15

SHEET 9 OF 16

FILE => 35e0049-x-xs13-020-2.dgn

USERNAME => s132175 DATE PLOTTED => 17-AUG-2016 TIME PLOTTED => 11:31

DIST	COUNTY	ROUTE	POST MILES TOTAL PROJECT	SHEET No.	TOTAL SHEETS
04	SM	101,114	1.3/2.5, 5.0/5.3	517	568

REGISTERED CIVIL ENGINEER 11-10-15 DATE

6-29-16
PLANS APPROVAL DATE

REGISTERED PROFESSIONAL ENGINEER LINAN WANG No. 54714 Exp. 12-31-17 CIVIL STATE OF CALIFORNIA

The State of California or its officers or agents shall not be responsible for the accuracy or completeness of electronic copies of this plan sheet.

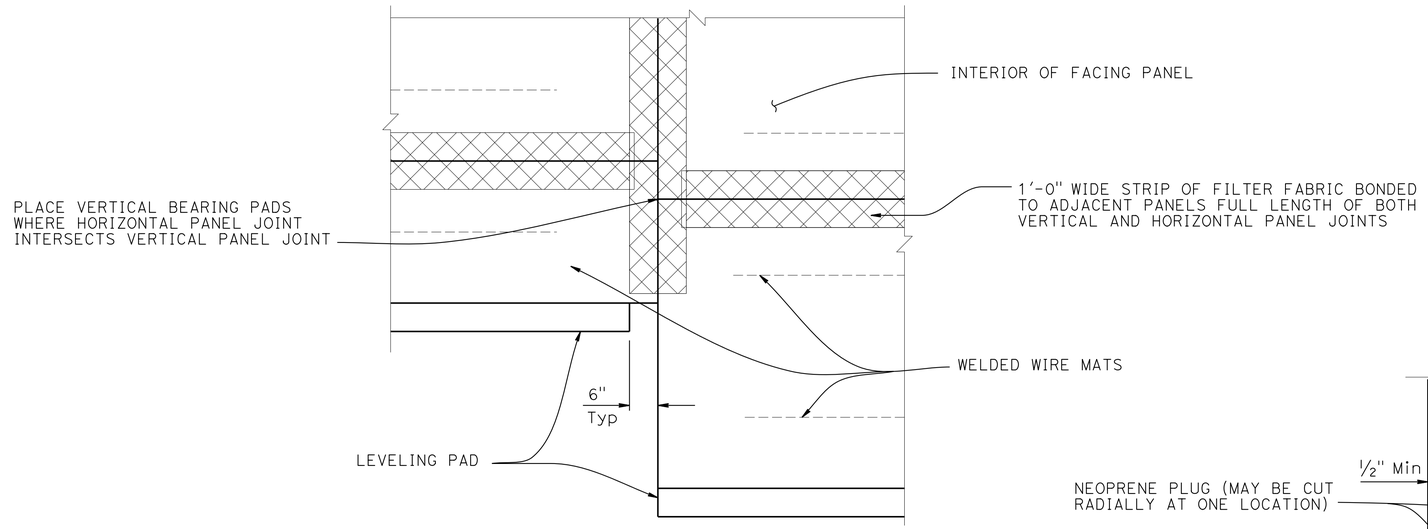

PART ELEVATION

3/4" = 1'-0"

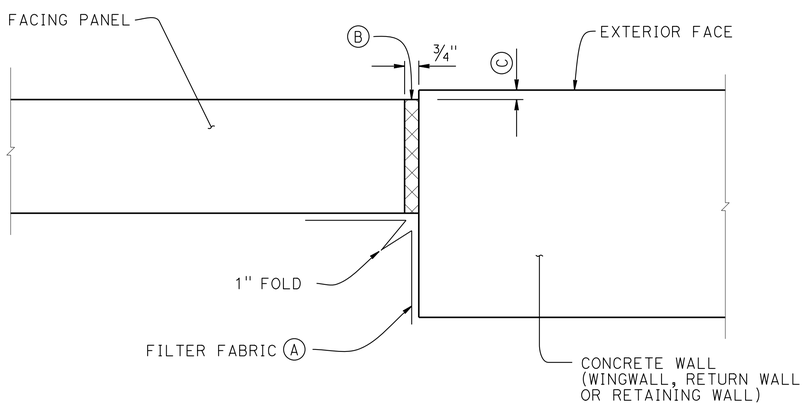

MSE FACING PANEL-TO-CONCRETE WALL JOINT DETAIL

3" = 1'-0"

NOTES:

(A) Bond a strip of filter fabric, 1'-6" wide, to back of MSE panels and the adjacent concrete wall for entire length of vertical joint

(B) Bond expansion joint material to the concrete wall

(C) Offset between face of MSE facing panel and face of the concrete wall as dictated by location of layout lines shown elsewhere in "STRUCTURE PLANS"

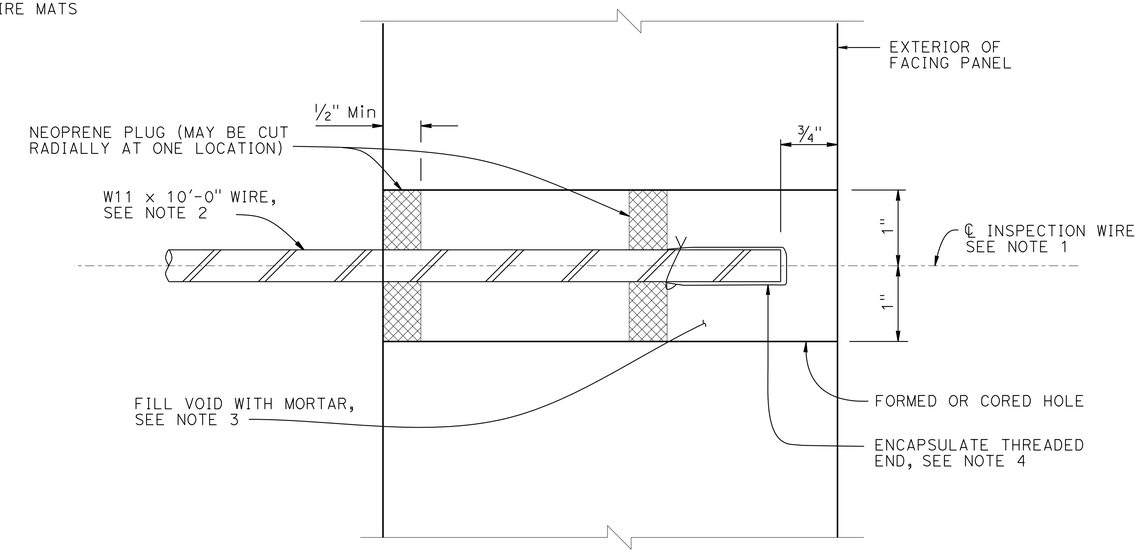

SECTION THRU INSPECTION WIRE

NO SCALE

NOTES:

1. Center inspection wire in facing panel.
2. Fabricated inspection wire from W11 wire representative of the welded wire mats, with 3/8" ø 16 UNC threads for at least 1 1/2" of one end.
3. Place inspection wire horizontal and perpendicular to the wall panel prior to backfilling.
4. Encapsulate threaded end with corrosion inhibiting mastic, vinyl covering, and secure with plastic tie.

UNC = Unified Coarse Threads

ROUTE 101/ WILLOW INTERCHANGE

RETAINING WALL 2

MECHANICALLY STABILIZED EMBANKMENT

DETAILS No. 3

STANDARD DRAWING

FILE NO. xs13-020-3

APPROVAL DATE July 2014

STATE OF CALIFORNIA DEPARTMENT OF TRANSPORTATION

DIVISION OF ENGINEERING SERVICES

BRIDGE NO. 35E0049

POST MILE 1.82-1.90

DS OSD 2147A (ENGLISH STANDARD DRAWING "XS" BORDER REV. (02-02-11)

ORIGINAL SCALE IN INCHES FOR REDUCED PLANS 0 1 2 3

UNIT: 59-3579
PROJECT NUMBER & PHASE: 04000006804
CONTRACT NO.: 04-235654

DISREGARD PRINTS BEARING EARLIER REVISION DATES 2-27-15

REVISION DATES

SHEET 10 OF 16

FILE => 35e0049-x-xs13-020-3.dgn

USERNAME => s132175 DATE PLOTTED => 17-AUG-2016 TIME PLOTTED => 11:31

DIST	COUNTY	ROUTE	POST MILES TOTAL PROJECT	SHEET No.	TOTAL SHEETS
04	SM	101,114	1.3/2.5, 5.0/5.3	518	568

REGISTERED CIVIL ENGINEER 11-10-15 DATE

6-29-16
PLANS APPROVAL DATE

The State of California or its officers or agents shall not be responsible for the accuracy or completeness of electronic copies of this plan sheet.

REGISTERED PROFESSIONAL ENGINEER LINAN WANG No. 54714 Exp. 12-31-17 CIVIL STATE OF CALIFORNIA

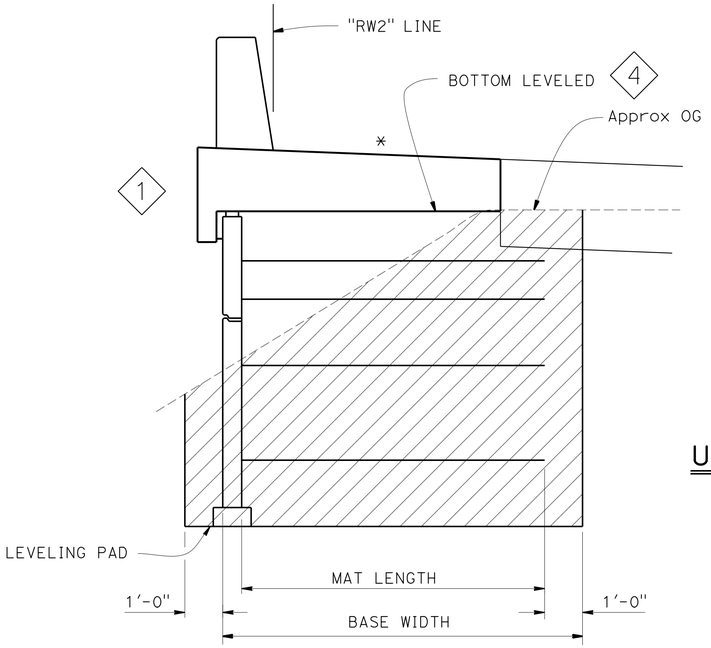

1 LIMITS OF EXCAVTION
½" = 1'-0"

4 * Match Roadway Cross Slope

2

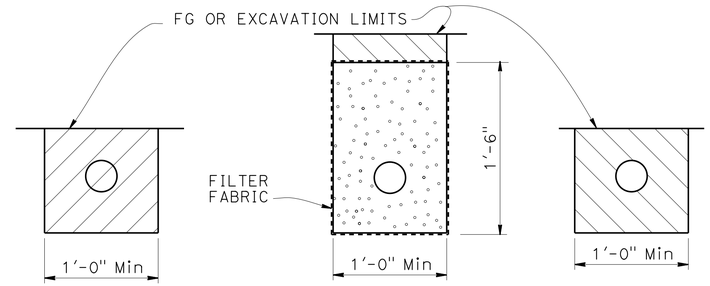

OUTLET PIPE CLEANOUT PIPE

EXCAVATION BACKFILL

UNPERFORATED OUTLET OR CLEAN OUT PIPE FOR UNDERDRAIN

NO SCALE

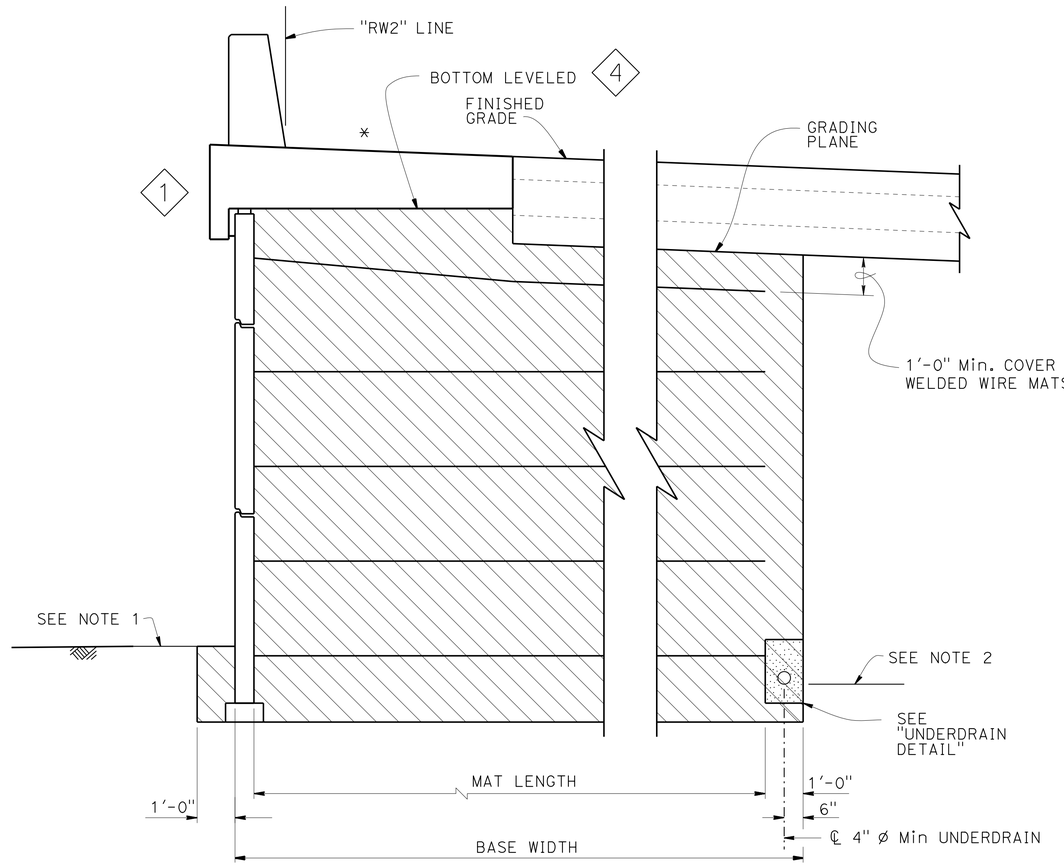

LIMITS OF BACKFILL

1 ROADWAY SECTION
½" = 1'-0"

NOTES:

1. Limits to FG except to GP when in roadway section
2. Locate underdrain behind bottom level of welded wire mats wherever possible, or at elevation needed to drain, as shown elsewhere on plans
3. Place perforated pipe underdrain of diameter shown elsewhere on plans or minimum 4" ø smoothed wall PVC or minimum 8" ø corrugated HDPE
4. Maximum spacing of outlet pipe is 200 feet
5. At sags in profile of underdrain, install outlet pipe for each direction of flow

LEGEND:

- Limits of Structure Excavation
- Limits of Structure Backfill
- Limits of Permeable Material

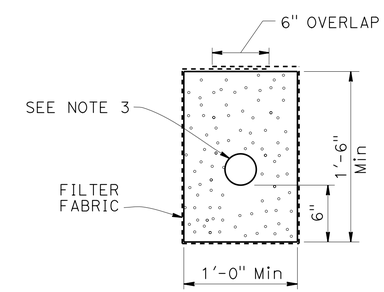

UNDERDRAIN DETAIL

SPECIAL DETAILS

ROUTE 101/ WILLOW INTERCHANGE

RETAINING WALL 2

MECHANICALLY STABILIZED EMBANKMENT

DETAILS No. 4 3

REVISED STANDARD DRAWING

FILE NO. xs13-020-6

APPROVAL DATE July 2014

1 Revised Detail.
2 Deleted Detail
3 Rearrange Details Number
3 Added Note

STATE OF CALIFORNIA DEPARTMENT OF TRANSPORTATION

DIVISION OF ENGINEERING SERVICES

BRIDGE NO. 35E0049
POST MILE 1.82-1.90

DS OSD 2147A (ENGLISH STANDARD DRAWING "XS" BORDER REV. (02-02-11)

ORIGINAL SCALE IN INCHES FOR REDUCED PLANS 0 1 2 3

UNIT: 59-3579
PROJECT NUMBER & PHASE: 04000006804
CONTRACT NO.: 04-235654

DISREGARD PRINTS BEARING EARLIER REVISION DATES

REVISION DATES: 2-22-15 6-3-15 10-29-15 11-05-15

SHEET 11 OF 16

FILE => 35e0049-x-xs13-020-6.dgn

USERNAME => s132775 DATE PLOTTED => 17-AUG-2016 TIME PLOTTED => 11:31

DIST	COUNTY	ROUTE	POST MILES TOTAL PROJECT	SHEET No.	TOTAL SHEETS
04	SM	101,114	1.3/2.5, 5.0/5.3	519	568

REGISTERED CIVIL ENGINEER 11-10-15 DATE

6-29-16
PLANS APPROVAL DATE

REGISTERED PROFESSIONAL ENGINEER LINAN WANG No. 54714 Exp. 12-31-17 CIVIL STATE OF CALIFORNIA

The State of California or its officers or agents shall not be responsible for the accuracy or completeness of scanned copies of this plan sheet.

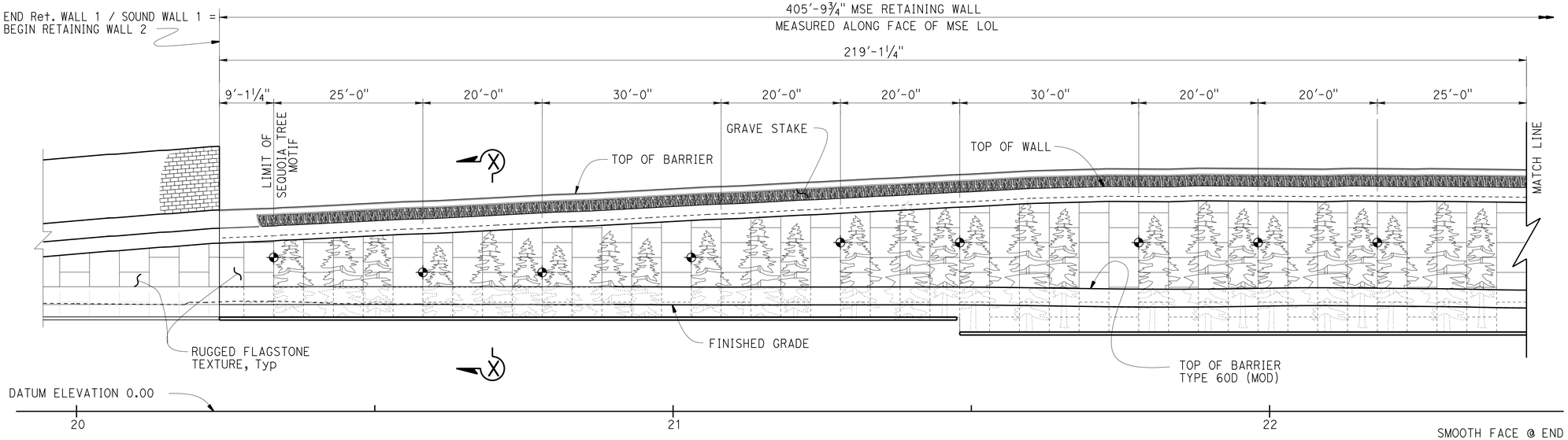

NOTES

For Barrier Architectural Treatment details and dimensions not shown, see "ARCHITECTURAL DETAILS NO. 4" sheet.

PART ELEVATION 1
SEQUOIA TREE MOTIF - LAYOUT ON FACE OF MSE WALL

1" = 10'

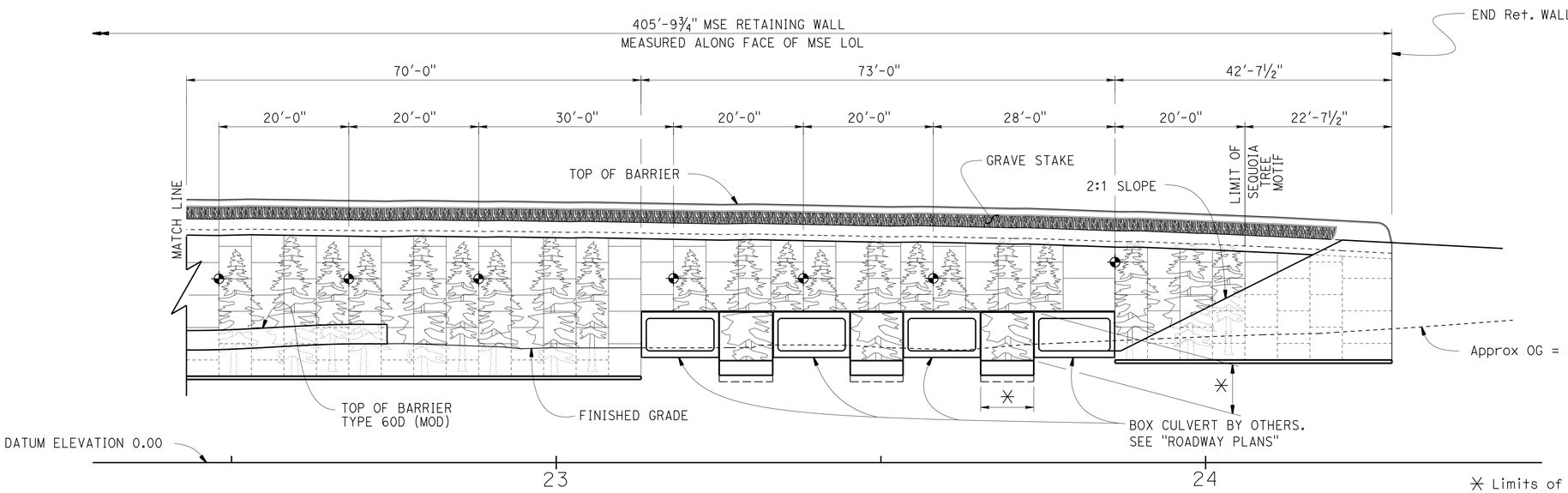

✳ Limits of Concrete Surface Texture (Sequoia Tree Motif), Type 5 Retaining Wall, Typ

PART ELEVATION 2
SEQUOIA TREE MOTIF - LAYOUT ON FACE OF MSE WALL AND TYPE 5 RETAINING WALL

1" = 10'

NOTE

✦ Indicates control point for Sequoia Motif.

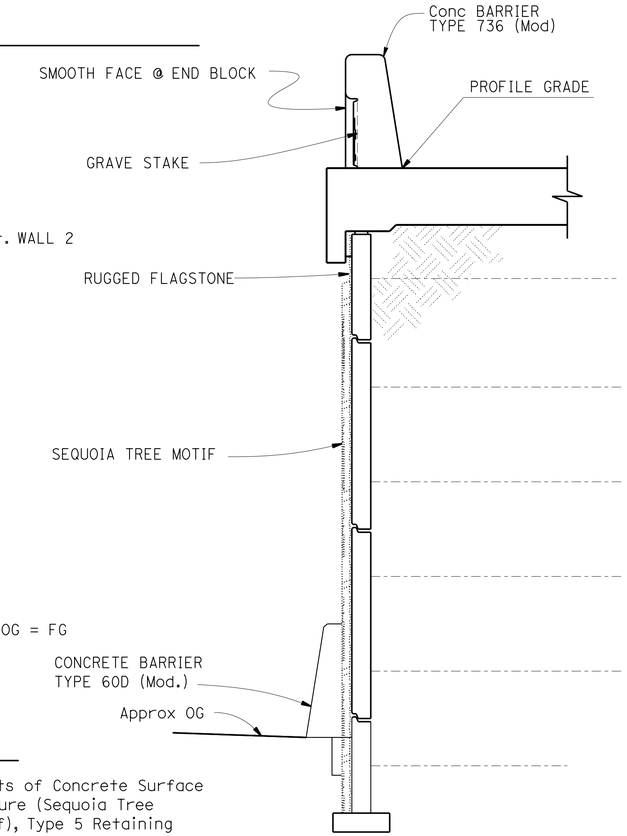

SECTION X-X

½" = 1'-0"

DESIGN	BY Peter Soin	CHECKED Rafael Salazar	
DETAILS	BY Jeff Thorne	CHECKED Rafael Salazar	
QUANTITIES	BY Peter Soin	CHECKED Rafael Salazar	

STATE OF CALIFORNIA
DEPARTMENT OF TRANSPORTATION

DIVISION OF ENGINEERING SERVICES
STRUCTURE DESIGN
DESIGN BRANCH 4

BRIDGE NO. 35E0049
POST MILE 1.82-1.90

ROUTE 101/ WILLOW INTERCHANGE
RETAINING WALL 2
ARCHITECTURAL DETAILS NO. 1

STRUCTURES DESIGN DETAIL SHEET (ENGLISH) (REV. 09-01-10)

ORIGINAL SCALE IN INCHES FOR REDUCED PLANS 0 1 2 3

UNIT: 59-3579
PROJECT NUMBER & PHASE: 04000006804
CONTRACT NO.: 04-235654

DISREGARD PRINTS BEARING EARLIER REVISION DATES

REVISION DATES 8-1-15 10-28-15 11-04-15

SHEET 12 OF 16

FILE => 35e0049-y-aesthdts01.dgn

USERNAME => s132775 DATE PLOTTED => 17-AUG-2016 TIME PLOTTED => 11:31

DIST	COUNTY	ROUTE	POST MILES TOTAL PROJECT	SHEET No.	TOTAL SHEETS
04	SM	101,114	1.3/2.5, 5.0/5.3	520	568

REGISTERED CIVIL ENGINEER 11-10-15 DATE

6-29-16
PLANS APPROVAL DATE

REGISTERED PROFESSIONAL ENGINEER
LINAN WANG
No. 54714
Exp. 12-31-17
CIVIL
STATE OF CALIFORNIA

The State of California or its officers or agents shall not be responsible for the accuracy or completeness of scanned copies of this plan sheet.

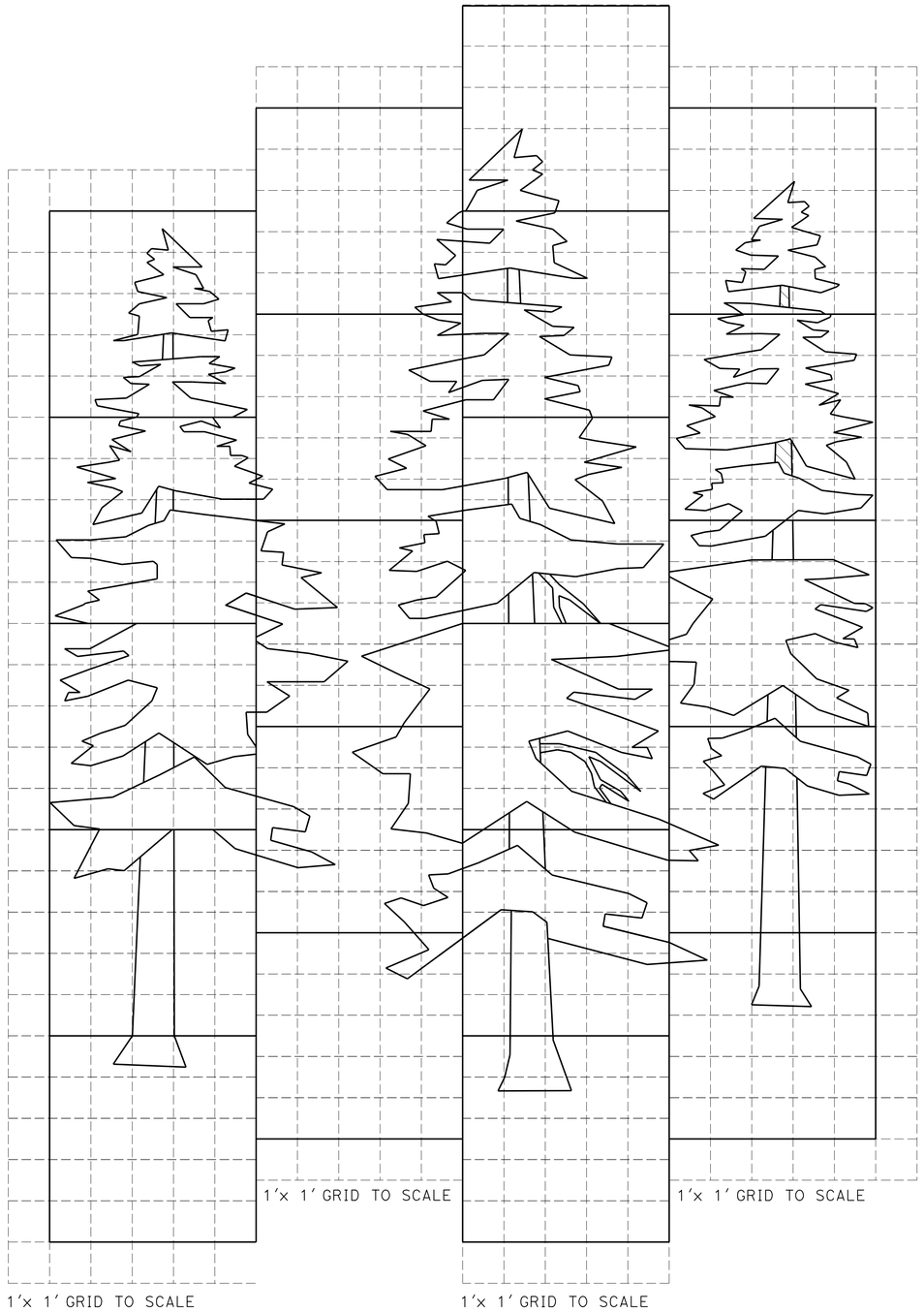

SEQUOIA TREE MOTIF - ON FACE OF MSE WALL

No Scale

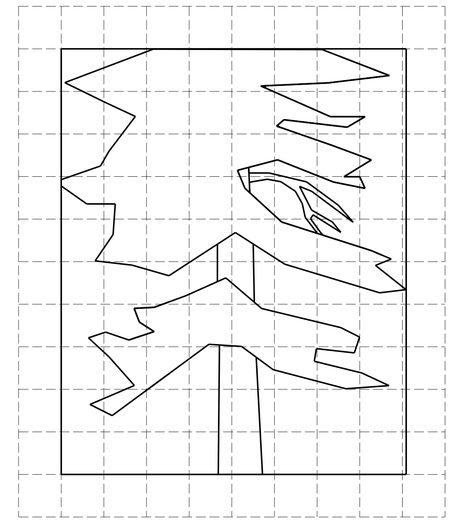

SEQUOIA TREE MOTIF - TYPE 5 RETAINING WALL

No Scale

DESIGN	BY Peter Soin	CHECKED Rafael Salazar
DETAILS	BY Jeff Thorne	CHECKED Rafael Salazar
QUANTITIES	BY Peter Soin	CHECKED Rafael Salazar

STATE OF CALIFORNIA
DEPARTMENT OF TRANSPORTATION

DIVISION OF ENGINEERING SERVICES
STRUCTURE DESIGN
DESIGN BRANCH 4

BRIDGE NO. 35E0049
POST MILE 1.82-1.90

ROUTE 101/ WILLOW INTERCHANGE
RETAINING WALL 2
ARCHITECTURAL DETAILS NO. 2

STRUCTURES DESIGN DETAIL SHEET (ENGLISH) (REV. 09-01-10)

ORIGINAL SCALE IN INCHES FOR REDUCED PLANS 0 1 2 3

UNIT: 59-3579
PROJECT NUMBER & PHASE: 04000006804
CONTRACT NO.: 04-235654

DISREGARD PRINTS BEARING EARLIER REVISION DATES

REVISION DATES: 8-1-15 | 10-28-15 | 11-16-15

SHEET 13 OF 16

FILE => 35e0049-y-aesthdts02.dgn

USERNAME => s132775 DATE PLOTTED => 17-AUG-2016 TIME PLOTTED => 11:31

DIST	COUNTY	ROUTE	POST MILES TOTAL PROJECT	SHEET No.	TOTAL SHEETS
04	SM	101,114	1.3/2.5, 5.0/5.3	521	568

REGISTERED CIVIL ENGINEER 11-10-15 DATE

6-29-16
PLANS APPROVAL DATE

REGISTERED PROFESSIONAL ENGINEER LINAN WANG No. 54714 Exp. 12-31-17 CIVIL STATE OF CALIFORNIA

The State of California or its officers or agents shall not be responsible for the accuracy or completeness of scanned copies of this plan sheet.

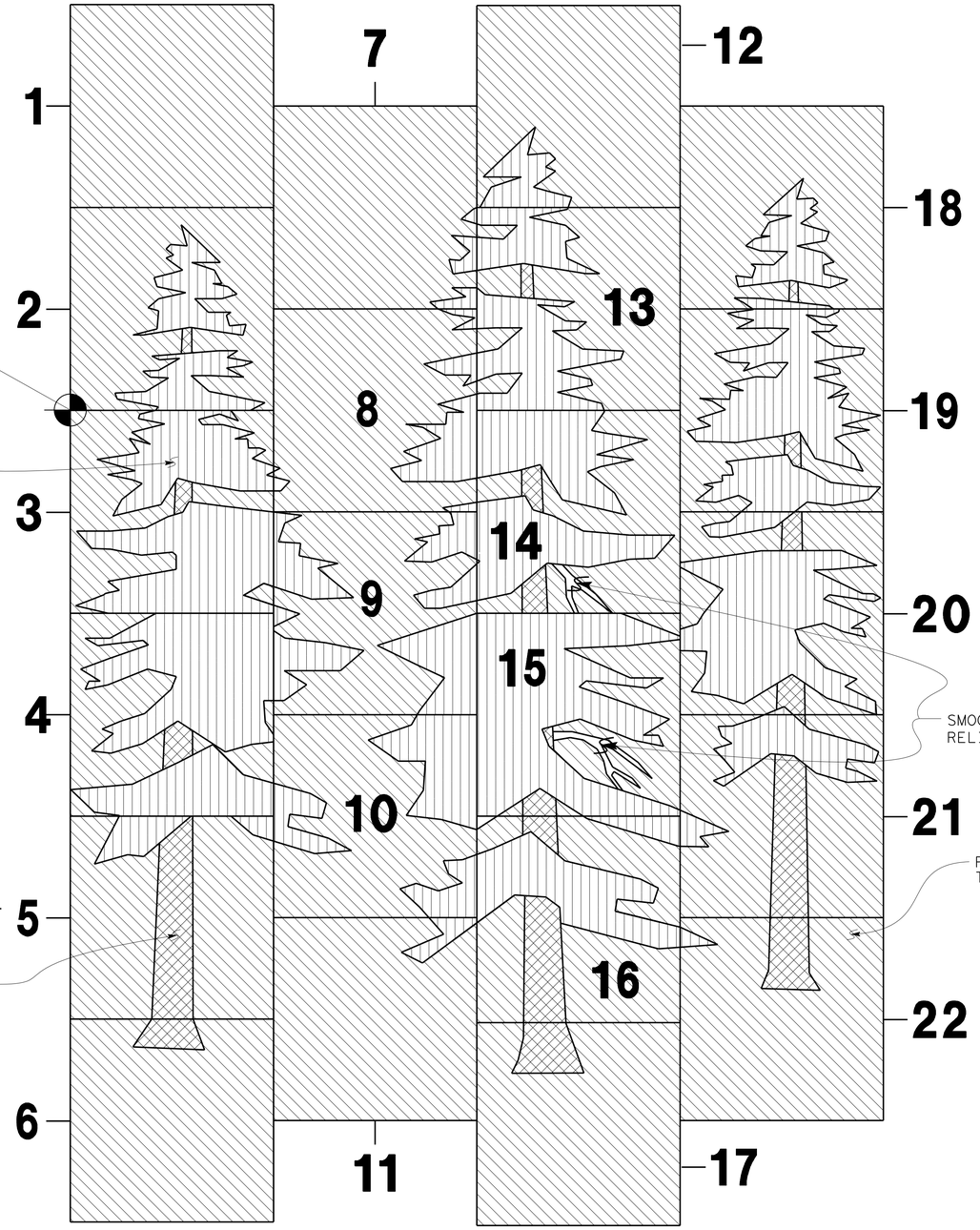

SEQUOIA TREE MOTIF - ON FACE OF MSE WALL

No Scale

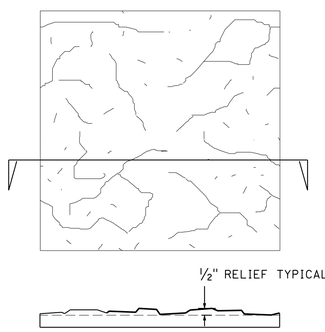

RUGGED FLAGSTONE TEXTURE

NO SCALE

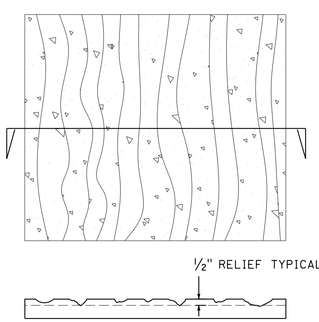

STONE GROUND FRACTURED GRANITE

NO SCALE

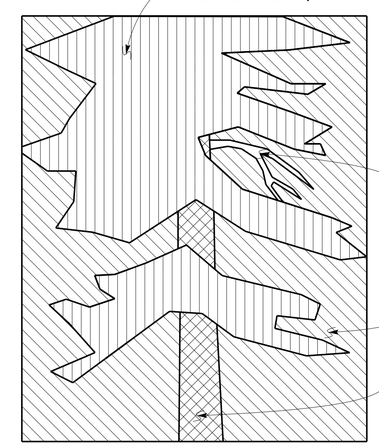

SEQUOIA TREE MOTIF TYPE 5 RETAINING WALL

No Scale

* OUT Measured from face of MSE Panel

NOTE: 22 Individual Panels

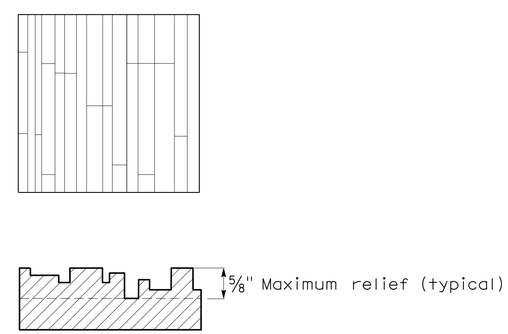

¾" - 3¼" width of random flutes, Typ

GRAVE STAKE TEXTURE

NO SCALE

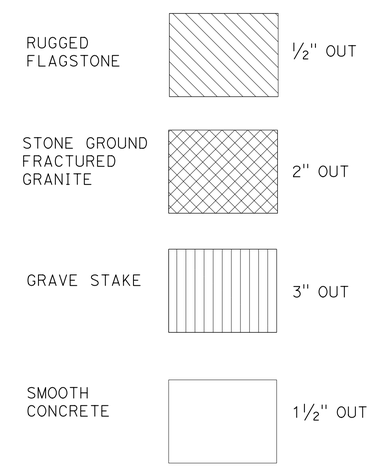

TEXTURE LEGEND

DESIGN	BY Peter Soin	CHECKED Rafael Salazar	
DETAILS	BY Jeff Thorne	CHECKED Rafael Salazar	
QUANTITIES	BY Peter Soin	CHECKED Rafael Salazar	

STATE OF CALIFORNIA
DEPARTMENT OF TRANSPORTATION

DIVISION OF ENGINEERING SERVICES
STRUCTURE DESIGN
DESIGN BRANCH 4

BRIDGE NO. 35E0049
POST MILE 1.82-1.90

ROUTE 101/ WILLOW INTERCHANGE
RETAINING WALL 2
ARCHITECTURAL DETAILS NO. 3

STRUCTURES DESIGN DETAIL SHEET (ENGLISH) (REV. 09-01-10)

ORIGINAL SCALE IN INCHES FOR REDUCED PLANS 0 1 2 3

UNIT: 59-3579
PROJECT NUMBER & PHASE: 04000006804
CONTRACT NO.: 04-235654

DISREGARD PRINTS BEARING EARLIER REVISION DATES

REVISION DATES 8-3-15 10-22-15 11-05-15

SHEET 14 OF 16

FILE => 35e0049-y-aesthdtsd03.dgn

USERNAME => s132775 DATE PLOTTED => 17-AUG-2016 TIME PLOTTED => 11:31

DIST	COUNTY	ROUTE	POST MILES TOTAL PROJECT	SHEET No.	TOTAL SHEETS
04	SM	101,114	1.3/2.5, 5.0/5.3	522	568

REGISTERED CIVIL ENGINEER 11-10-15 DATE

6-29-16
PLANS APPROVAL DATE

REGISTERED PROFESSIONAL ENGINEER LINAN WANG No. 54714 Exp. 12-31-17 CIVIL STATE OF CALIFORNIA

The State of California or its officers or agents shall not be responsible for the accuracy or completeness of scanned copies of this plan sheet.

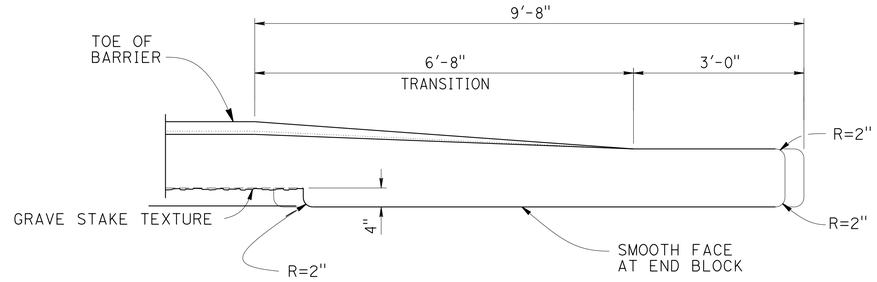

SECTION B-B
3/4"=1'-0"

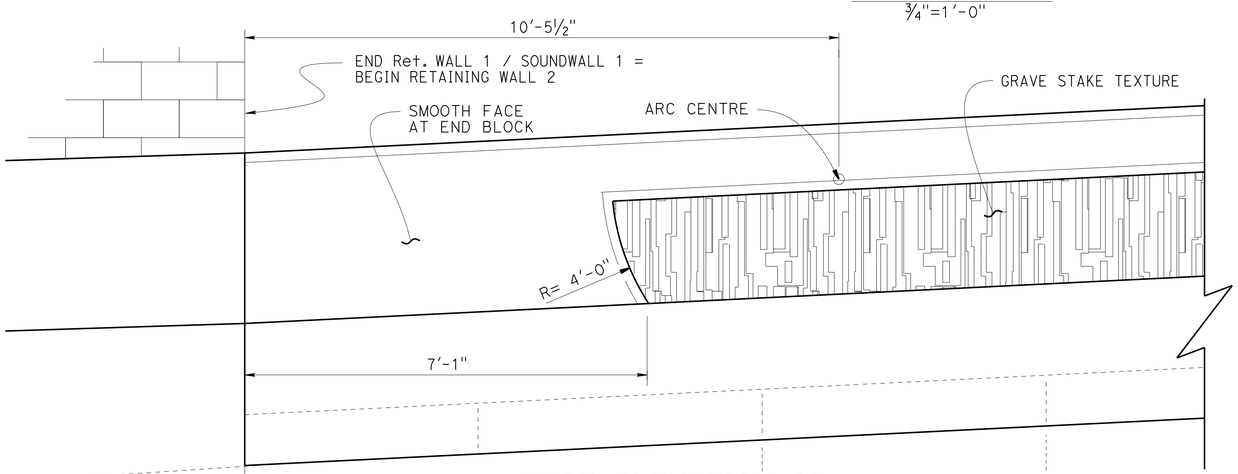

PART ELEVATION OF CONCRETE BARRIER TYPE 736 (MOD) BARRIER AT BEGIN WALL
3/4" = 1'-0"

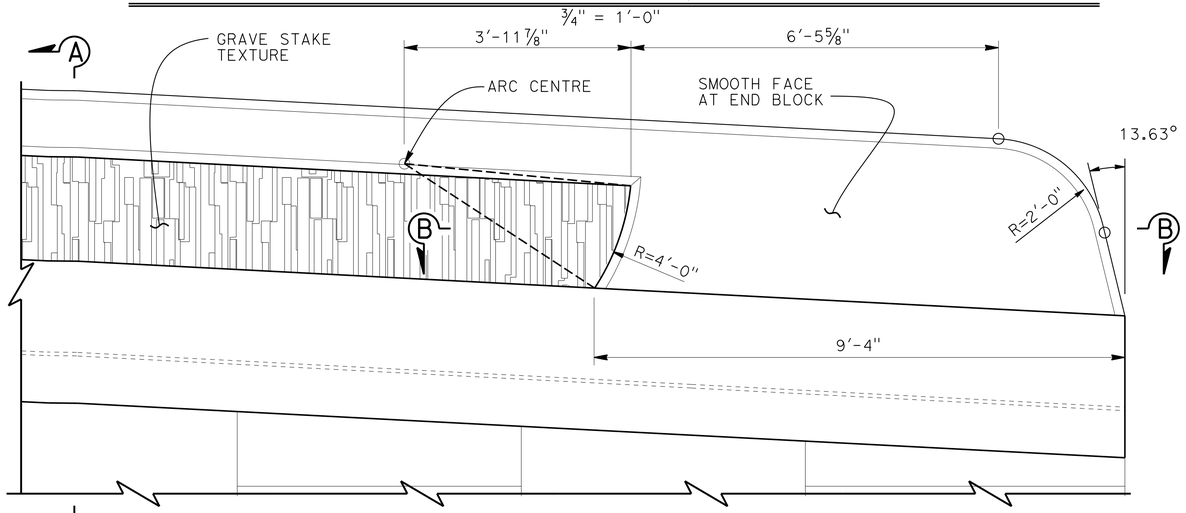

PART ELEVATION OF CONCRETE BARRIER TYPE 736 (MOD) BARRIER AT END WALL
3/4" = 1'-0"

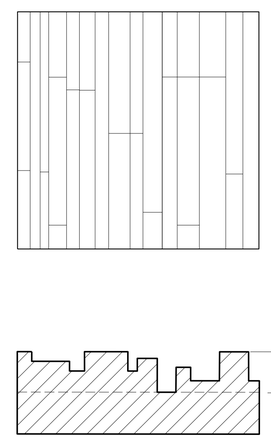

GRAVE STAKE TEXTURE
3/4" - 3 1/4" WIDTH OF RANDOM FLUTES, TYP

GRAVE STAKE TEXTURE
NO SCALE

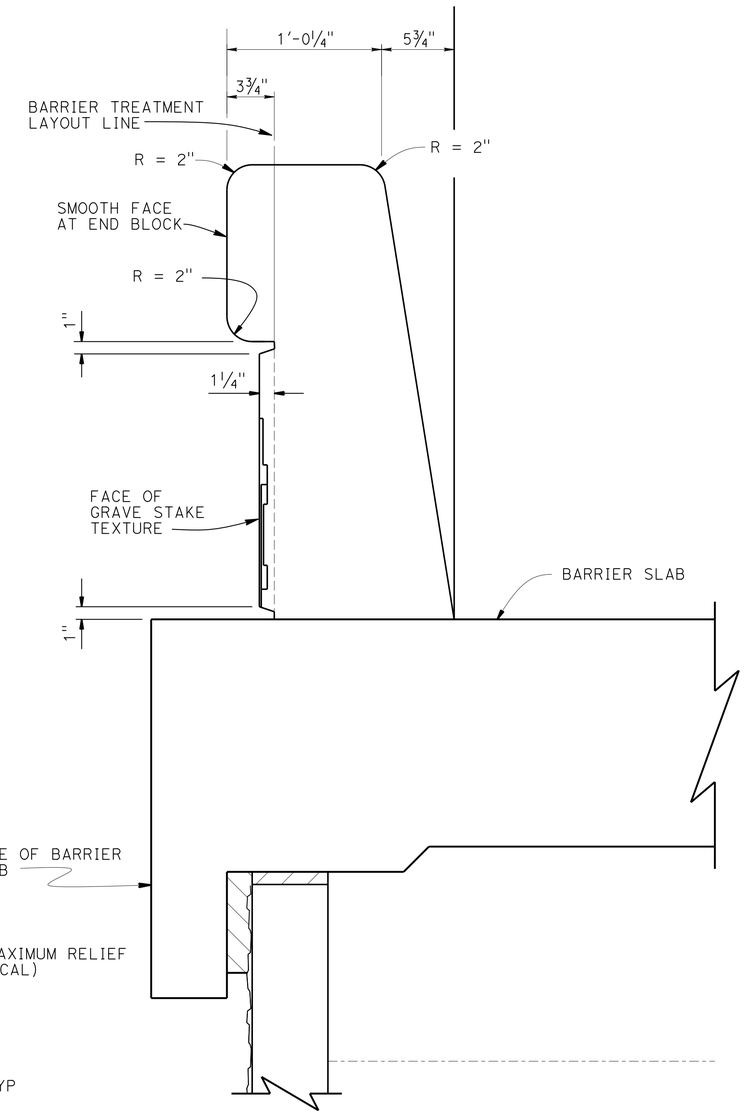

SECTION A-A
2"=1'-0"

DESIGN	BY Peter Soin	CHECKED Rafael Salazar	
DETAILS	BY Jeff Thorne	CHECKED Rafael Salazar	
QUANTITIES	BY Peter Soin	CHECKED Rafael Salazar	

STATE OF CALIFORNIA
DEPARTMENT OF TRANSPORTATION

DIVISION OF ENGINEERING SERVICES
STRUCTURE DESIGN
DESIGN BRANCH 4

BRIDGE NO. 35E0049
POST MILE 1.82-1.90

ROUTE 101/ WILLOW INTERCHANGE
RETAINING WALL 2
ARCHITECTURAL DETAILS NO. 4

STRUCTURES DESIGN DETAIL SHEET (ENGLISH) (REV. 09-01-10)

ORIGINAL SCALE IN INCHES FOR REDUCED PLANS 0 1 2 3

UNIT: 59-3579
PROJECT NUMBER & PHASE: 04000006804
CONTRACT NO.: 04-235654

DISREGARD PRINTS BEARING EARLIER REVISION DATES

REVISION DATES: 8-3-15 8-12-15 11-17-15 11-18-15

SHEET 15 OF 16

FILE => 35e0049-y-aestndts04.dgn

USERNAME => s132175 DATE PLOTTED => 17-AUG-2016 TIME PLOTTED => 11:32

DIST	COUNTY	ROUTE	POST MILES TOTAL PROJECT	SHEET No.	TOTAL SHEETS
04	SM	101,114	1.3/2.5, 5.0/5.3	523	568

REGISTERED CIVIL ENGINEER 10-20-15 DATE

6-29-16
PLANS APPROVAL DATE

PROFESSIONAL GEOLOGIST Matthew Gaffney No. 8045 Exp. 6-30-16 STATE OF CALIFORNIA

The State of California or its officers or agents shall not be responsible for the accuracy or completeness of electronic copies of this plan sheet.

This LOTB sheet was prepared in accordance with the Caltrans Soil & Rock Logging, Classification, & Presentation Manual (2010 Edition).

See 2010 Standard Plans A10F and A10G for Soil Legend, and A10H for Rock Legend.

BENCH MARK

HV 12
Fnd HV-12 (unknown monument)
9.57 FT Rt "D2" LINE ROUTE 101
Sta 223+55.98
N 1,997,459.76
E 6,081,283.65
Elev = 41.97

HV 10142
Fnd WP10102 PK
1311.66 Ft Lt "D2" LINE ROUTE 101
Sta 216+59.97
N 1,998,932.13
E 6,081,532.78
Elev = 14.09

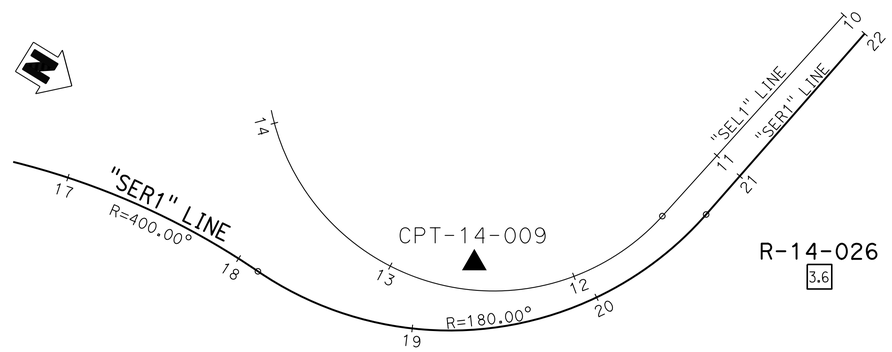

PLAN
1" = 40'

Note: Groundwater was not measured in Boring R-14-026.

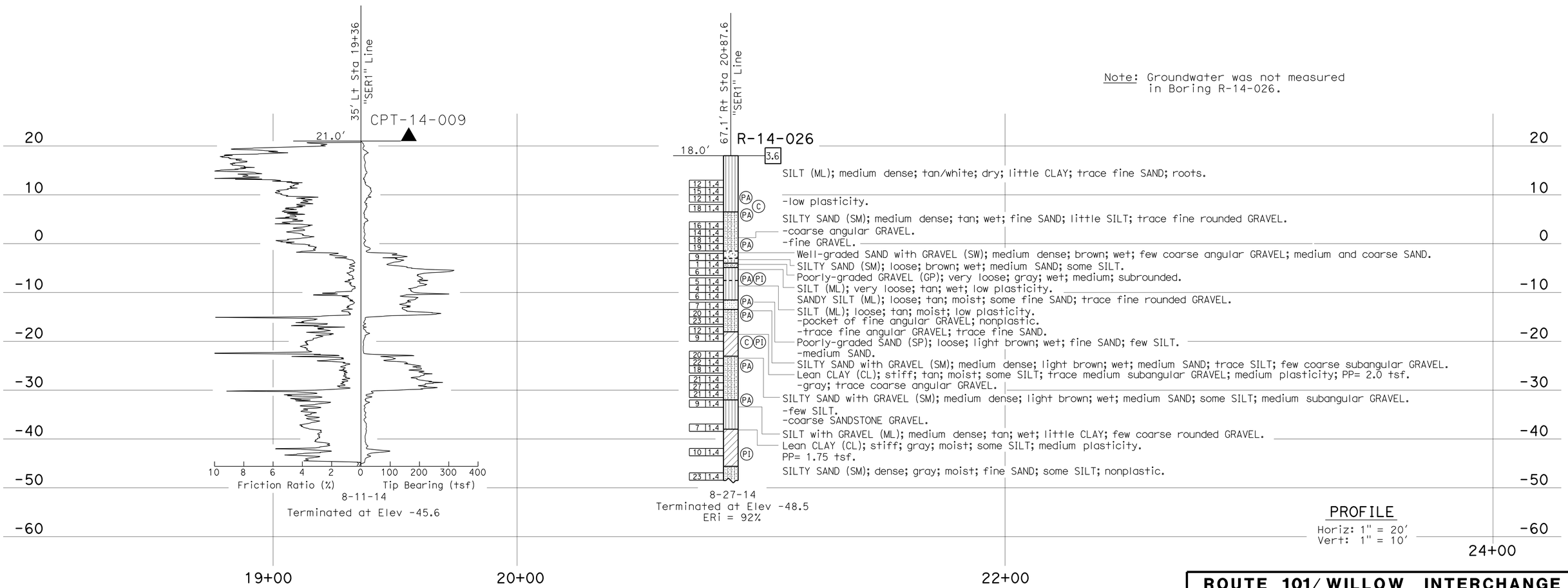

PROFILE
Horiz: 1" = 20'
Vert: 1" = 10'

ENGINEERING SERVICES	MATERIALS AND GEOTECHNICAL SERVICES	STATE OF CALIFORNIA DEPARTMENT OF TRANSPORTATION	DIVISION OF ENGINEERING SERVICES STRUCTURE DESIGN DESIGN BRANCH 4	BRIDGE NO. 35E0049 POST MILE 1.82-1.90	ROUTE 101/ WILLOW INTERCHANGE RETAINING WALL 2 LOG OF TEST BORINGS
FUNCTIONAL SUPERVISOR NAME: C. Risden	DRAWN BY: I. G-Remmen CHECKED BY: D. Nesbitt	FIELD INVESTIGATION BY: M. Gaffney, R. Nashed			

OGS CIVIL LOG OF TEST BORINGS SHEET

ORIGINAL SCALE IN INCHES FOR REDUCED PLANS 0 1 2 3

UNIT: 59-3579
PROJECT NUMBER & PHASE: 04000006804 CONTRACT NO.: 04-235654

DISREGARD PRINTS BEARING EARLIER REVISION DATES → REVISION DATES 08-25-15 10-19-15 SHEET 16 OF 16

FILE => 35e0049-z-1tb01.dgn

USERNAME => s132175 DATE PLOTTED => 17-AUG-2016 TIME PLOTTED => 11:32

DIST	COUNTY	ROUTE	POST MILES TOTAL PROJECT	SHEET No.	TOTAL SHEETS
04	SM	101,114	1.3/2.5, 5.0/5.3	524	568

REGISTERED CIVIL ENGINEER 11-10-15 DATE

6-29-16
PLANS APPROVAL DATE

REGISTERED PROFESSIONAL ENGINEER LINAN WANG No. 54714 Exp. 12-31-17 CIVIL STATE OF CALIFORNIA

The State of California or its officers or agents shall not be responsible for the accuracy or completeness of scanned copies of this plan sheet.

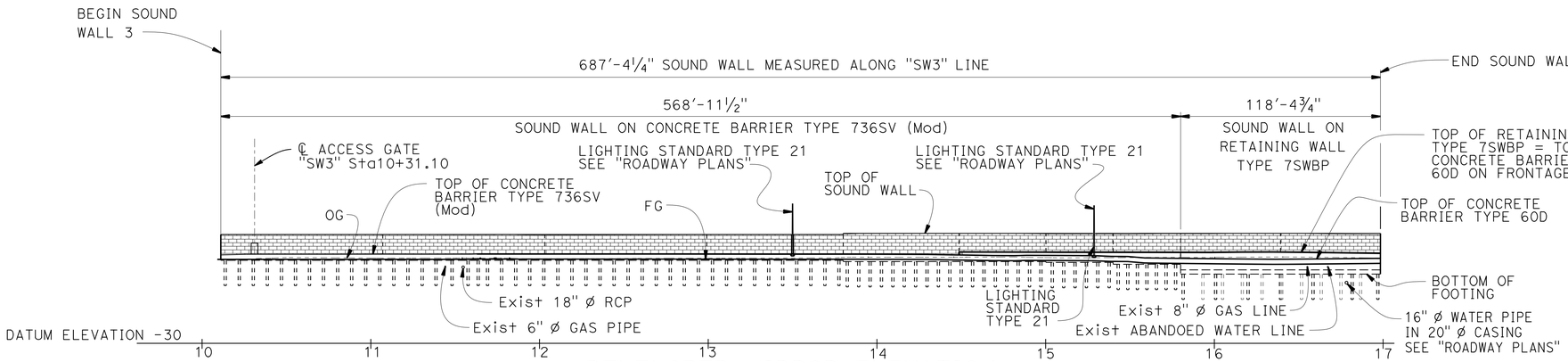

DEVELOPED MIRROR ELEVATION

1" = 40'

CURVE DATA				
	R	Δ	T	L
①	1000.00'	3°34'21"	31.19'	62.35'
②	1500.00'	7°24'50"	97.18'	194.09'

QUANTITIES

REMOVE SOUND WALL (PORTION), LOCATION D	LUMP	SUM
REMOVE CONCRETE BARRIER (PORTION),LOCATION D	LUMP	SUM
STRUCTURE EXCAVATION (RETAINING WALL)	371	CY
STRUCTURE BACKFILL (RETAINING WALL)	48	CY
FURNISH PILING (CLASS 90)(ALTERNATIVE Y)	2,600	LF
DRIVE PILE (CLASS 90)(ALTERNATIVE Y)	100	EA
STRUCTURAL CONCRETE, RETAINING WALL	140	CY
BAR REINFORCING STEEL (RETAINING WALL)	11,145	LB
SOUND WALL (MASONRY BLOCK)	9,162	SQFT
MISCELLANEOUS METAL (BRIDGE)	302	LB
CONCRETE BARRIER (TYPE 60D)	223	LF
CONCRETE BARRIER (TYPE 60D MODIFIED)	15	LF
CONCRETE BARRIER (TYPE 736SV MODIFIED)	570	LF

STANDARD PLANS DATED 2010 EDITION

SHT NO.	TITLE
A10A	ABBREVIATIONS (SHEET 1 OF 2)
RSP A10B	ABBREVIATIONS (SHEET 2 OF 2)
RSP A10F	LEGEND - SOIL (SHEET 1 OF 2)
RSP A10G	LEGEND - SOIL (SHEET 2 OF 2)
RSP A76A	CONCRETE BARRIER TYPE 60
B0-3	BRIDGE DETAILS
B2-5	PILE DETAILS-CLASS 90 AND CLASS 140
RSP B3-5	RETAINING WALL DETAILS No. 1
B3-6	RETAINING WALL DETAILS No. 2
RSP B11-56	CONCETE BARRIER TYPE 736
B15-4	SOUND WALL MASONRY BLOCK ON PILE CAP DETAIL (2)
RSP B15-6	SOUND WALL MASONRY BLOCK ON TYPE 736S/SV BARRIER DETAILS (1)
RSP B15-7	SOUND WALL MASONRY BLOCK ON TYPE 736S/SV BARRIER DETAILS (2)
B15-12	SOUNDWALL MASONRY BLOCK ON FOOTING OR PILE CAP - 5'-0" ACCESS GATE DETAILS (1)
B15-13	SOUNDWALL MASONRY BLOCK ON FOOTING OR PILE CAP - 5'-0" ACCESS GATE DETAILS (2)
B15-14	SOUNDWALL MASONRY BLOCK ACCESS GATE LOCKING DETAILS
B15-15	SOUND WALL MASONRY BLOCK ON TYPE 736S/SV BARRIER ON PILE FOOTING FOR SPANNING UTILITIES
RSP ES-6A	ELECTRICAL SYSTEMS (LIGHTING STANDARD, TYPES 15 AND 21)

STANDARD PLAN SHEET No.

DETAIL No.

BEGIN SOUND WALL 3 ON BARRIER =
BEGIN "SW3" Sta 10+11.10
73.4' Rt "D2" 212+09.71± =
END REMOVE Exist SOUND WALL (PORTION)
AND END REMOVE CONCRETE BARRIER (PORTION)
CONFORM TO Exist SOUND WALL

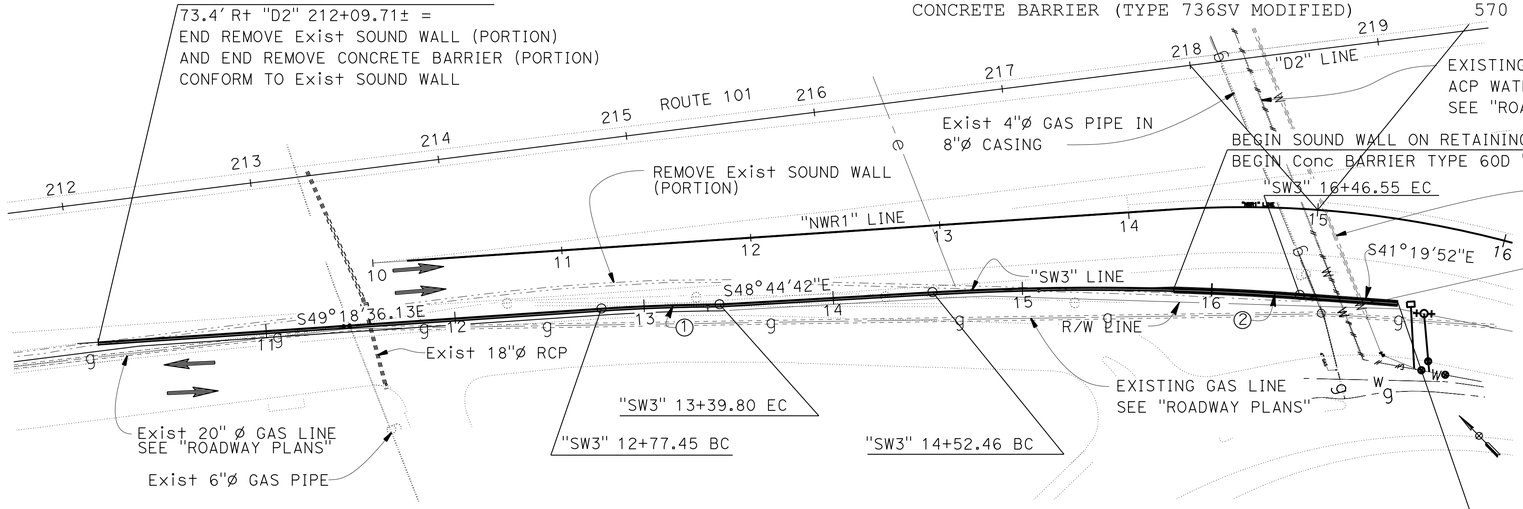

PLAN

1" = 40'

INDEX TO PLANS

SHT NO.	TITLE
1.	GENERAL PLAN NO. 1
2.	GENERAL PLAN NO. 2
3.	STRUCTURE PLAN NO. 1
4.	STRUCTURE PLAN NO. 2
5.	STRUCTURE PLAN NO. 3
6.	FOUNDATION PLAN NO. 1
7.	FOUNDATION PLAN NO. 2
8.	RETAINING WALL DETAILS
9.	RETAINING WALL TYPE 7SWBP-DETAILS NO. 1
10.	RETAINING WALL TYPE 7SWBP-DETAILS NO. 2
11.	LOG OF TEST BORINGS

NOTE:
THE CONTRACTOR SHALL VERIFY ALL CONTROLLING FIELD DIMENSIONS BEFORE ORDERING OR FABRICATING ANY MATERIAL.

ROUTE 101/ WILLOW INTERCHANGE
SOUND WALL 3
GENERAL PLAN NO. 1

Minh Ha DESIGN ENGINEER	DESIGN	BY A. Alcantara	CHECKED L. Barnard	LOAD & RESISTANCE FACTOR DESIGN — LIVE LOADING: HL93 W/"LOW-BOY"; PERMIT DESIGN VEHICLE
	DETAILS	BY M. Lane	CHECKED L. Barnard	LAYOUT — BY A. Alcantara — CHECKED L. Wang
	QUANTITIES	BY A. Alcantara	CHECKED L. Wang	SPECIFICATIONS — BY Sirisha Nelapatia — PLANS AND SPECS COMPARED L. Wang

ORIGINAL SCALE IN INCHES FOR REDUCED PLANS 0 1 2 3

STATE OF CALIFORNIA DEPARTMENT OF TRANSPORTATION

DIVISION OF ENGINEERING SERVICES STRUCTURE DESIGN DESIGN BRANCH 4

BRIDGE NO. 35E0050 POST MILE

UNIT: 59-3579
PROJECT NUMBER & PHASE: 04000006804 CONTRACT NO.: 04-235654

DISREGARD PRINTS BEARING EARLIER REVISION DATES

REVISION DATES 03-23-16 11-05-15 11-21-15 2-4-16 SHEET 1 OF 11

STRUCTURES DESIGN GENERAL PLAN SHEET (ENGLISH) (REV.09-01-10)

FILE => 35e0050-a-gp01.dgn

USERNAME => s132175 DATE PLOTTED => 17-AUG-2016 TIME PLOTTED => 11:32

DIST	COUNTY	ROUTE	POST MILES TOTAL PROJECT	SHEET No.	TOTAL SHEETS
04	SM	101,114	1.3/2.5, 5.0/5.3	525	568

REGISTERED CIVIL ENGINEER 11-10-15 DATE

6-29-16
PLANS APPROVAL DATE

REGISTERED PROFESSIONAL ENGINEER LINAN WANG No. 54714 Exp. 12-31-17 CIVIL STATE OF CALIFORNIA

The State of California or its officers or agents shall not be responsible for the accuracy or completeness of scanned copies of this plan sheet.

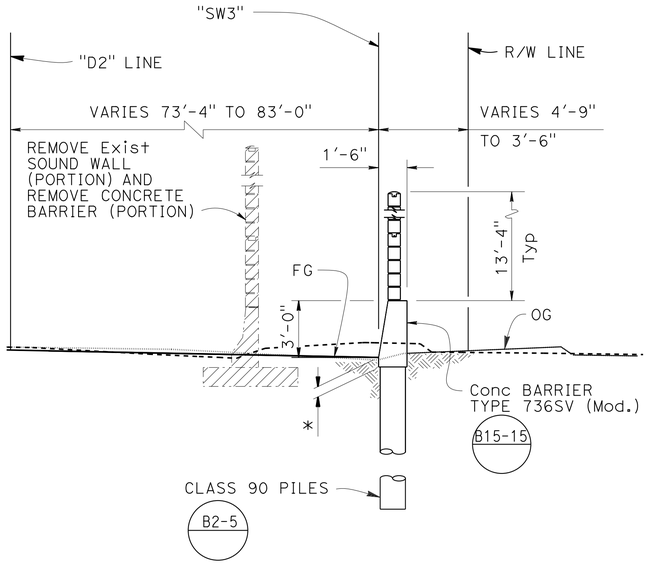

Sta 10+11.10 TO 11+65.59
TYPICAL SECTION
1/4"=1'-0"

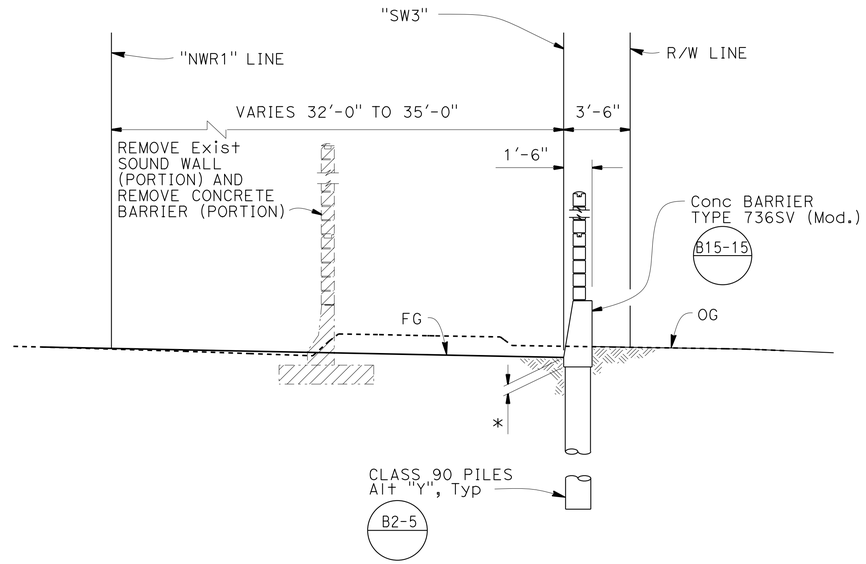

Sta 11+65.59 TO 14+48.64
TYPICAL SECTION
1/4"=1'-0"

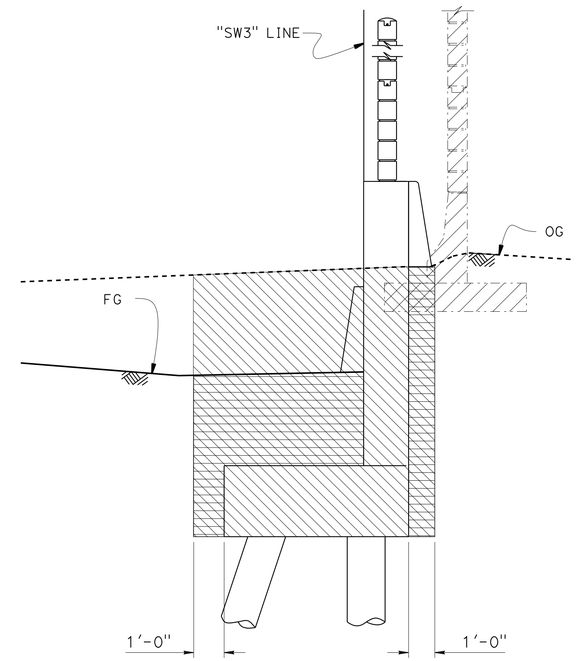

Sta 15+80.00 TO 16+98.45

LIMITS OF EXCAVATION AND BACKFILL
3/8" = 1'-0"

LEGEND

- Indicates Structure Excavation (Retaining Wall)
- Indicates Structure Backfill (Retaining Wall)
- Indicates Removal of Existing Sound Wall (Portion)

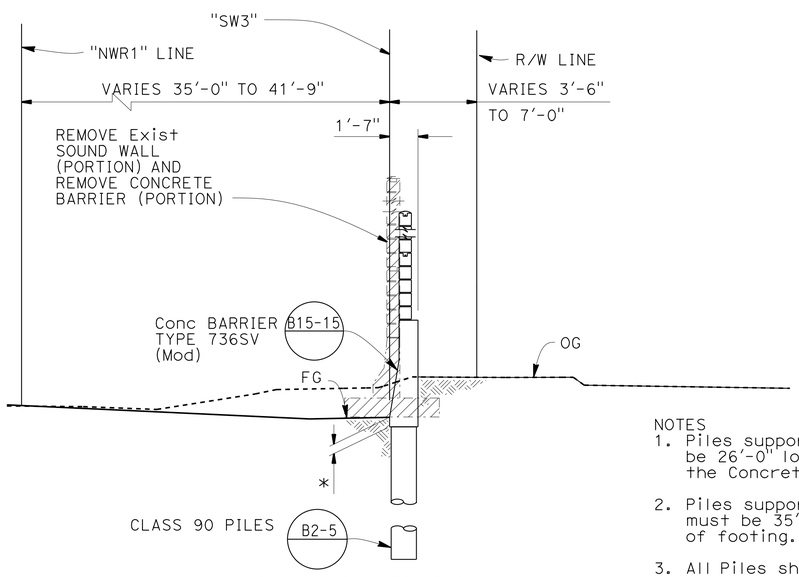

Sta 14+48.64 TO 15+80.00
TYPICAL SECTION
1/4"=1'-0"

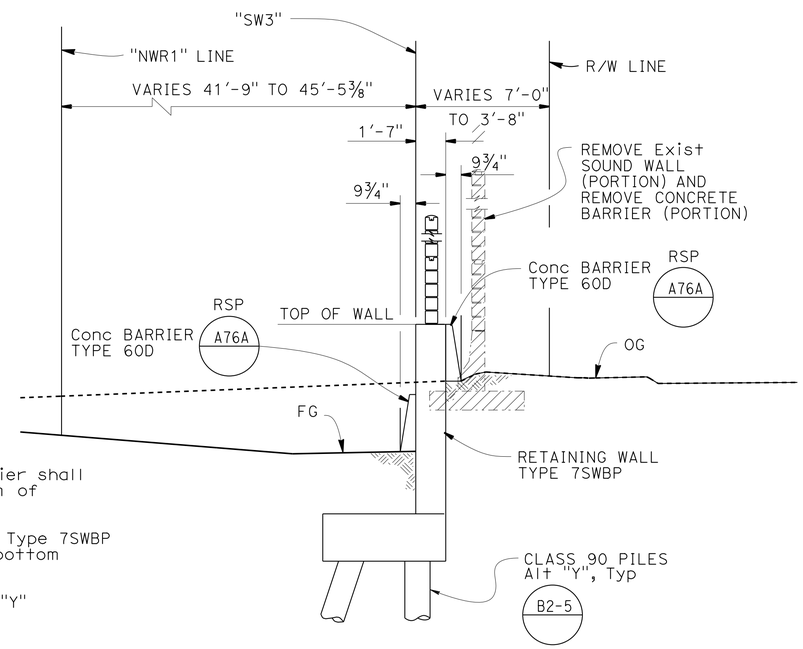

Sta 15+80.00 TO 16+98.45
TYPICAL SECTION
1/4"=1'-0"

NOTES
1. Piles supporting Concrete Barrier shall be 26'-0" long below the bottom of the Concrete Barrier.
2. Piles supporting Retaining Wall Type 7SWBP must be 35'-0" long below the bottom of footing.
3. All Piles shall be Class 90 Alt "Y"
4. For FG see "ROADWAY PLANS".

* Design "H_e"

NOTE:
THE CONTRACTOR MUST VERIFY ALL CONTROLLING FIELD DIMENSIONS BEFORE ORDERING OR FABRICATING ANY MATERIAL.

ROUTE 101/ WILLOW INTERCHANGE
SOUND WALL 3
GENERAL PLAN NO. 2

Minh Ha, DESIGN ENGINEER	DESIGN	BY A. Alcantara	CHECKED L. Barnard	LOAD & RESISTANCE FACTOR DESIGN	LIVE LOADING: HL93 W/"LOW-BOY": PERMIT DESIGN VEHICLE
	DETAILS	BY A. Onodera	CHECKED L. Barnard	LAYOUT: BY A. Alcantara	CHECKED Linan Wang
	QUANTITIES	BY A. Alcantara	CHECKED L. Wang	SPECIFICATIONS: BY Sirisha Nelapetia	PLANS AND SPECS COMPARED Linan Wang

ORIGINAL SCALE IN INCHES FOR REDUCED PLANS 0 1 2 3

STATE OF CALIFORNIA DEPARTMENT OF TRANSPORTATION

DIVISION OF ENGINEERING SERVICES STRUCTURE DESIGN DESIGN BRANCH 4

BRIDGE NO. 35E0050
POST MILE

UNIT: 59-3579
PROJECT NUMBER & PHASE: 04000006804
CONTRACT NO.: 04-235654

DISREGARD PRINTS BEARING EARLIER REVISION DATES

REVISION DATES: 11-16-15 11-23-15 02-02-16 11-04-16

SHEET 2 OF 11

USERNAME => s13321?5 DATE PLOTTED => 17-AUG-2016 TIME PLOTTED => 11:32

STRUCTURES DESIGN GENERAL PLAN SHEET (ENGLISH) (REV.09-01-10)

FILE => 35e0050-a-gp02.dgn

DIST	COUNTY	ROUTE	POST MILES TOTAL PROJECT	SHEET No.	TOTAL SHEETS
04	SM	101,114	1.3/2.5, 5.0/5.3	526	568

REGISTERED CIVIL ENGINEER 11-10-15 DATE

6-29-16
PLANS APPROVAL DATE

REGISTERED PROFESSIONAL ENGINEER LINAN WANG No. 54714 Exp. 12-31-17 CIVIL STATE OF CALIFORNIA

The State of California or its officers or agents shall not be responsible for the accuracy or completeness of scanned copies of this plan sheet.

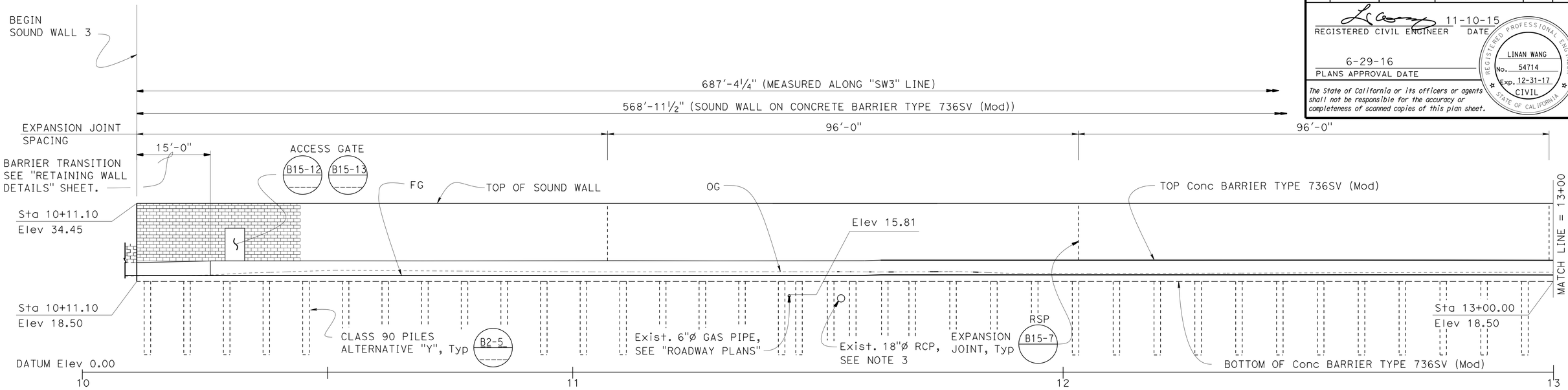

MIRROR ELEVATION

1" = 10'

TOP OF BARRIER ELEVATION
"SW3" LINE

Sta	Elev
10+11.10	22.70
10+20	22.71
10+40	22.71
10+60	22.71
10+80	22.71
11+00	22.73
11+20	22.74
11+40	22.76
11+60	22.78
11+80	22.85
12+00	22.85
12+20	22.86
12+40	22.86
12+60	22.86
12+80	22.86
13+00	22.83

NOTES

1. All Class 90, Alternate "Y" Piles are 26'-0" long from bottom of Concrete Barrier.
2. Locate piles 1'-6" minimum clear of existing utilities.
3. Verify locations and top elevations of all exist utility pipes before construction.
4. For FG see "ROADWAY PLANS".

CURVE DATA				
	R	Δ	T	L
1	1000.00'	3°34'21"	31.19'	62.35'

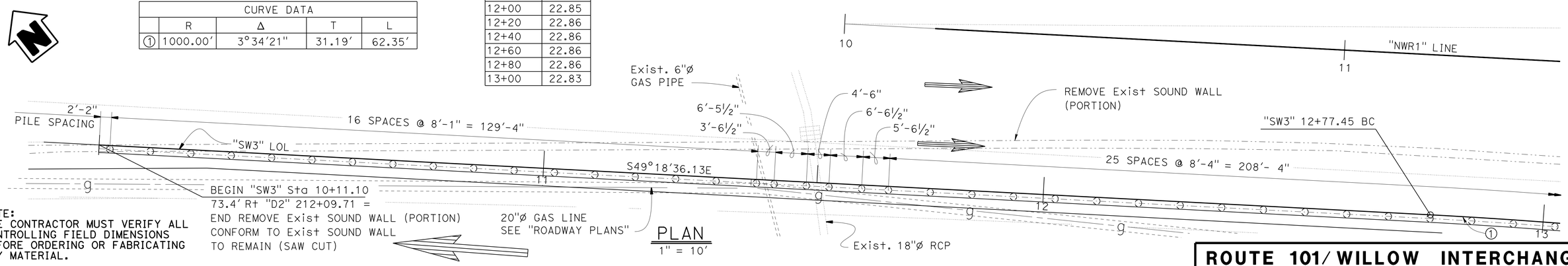

PLAN

1" = 10'

NOTE:
THE CONTRACTOR MUST VERIFY ALL CONTROLLING FIELD DIMENSIONS BEFORE ORDERING OR FABRICATING ANY MATERIAL.

	BY	CHECKED
DESIGN	A. Alcantara	L. Barnard
DETAILS	M. Lane	L. Barnard
QUANTITIES	A. Alcantara	L. Wang

STATE OF CALIFORNIA
DEPARTMENT OF TRANSPORTATION

DIVISION OF ENGINEERING SERVICES
STRUCTURE DESIGN
DESIGN BRANCH 4

BRIDGE NO. 35E0050
POST MILE X

ROUTE 101/ WILLOW INTERCHANGE
SOUND WALL NO. 3
STRUCTURE PLAN NO. 1

STRUCTURES DESIGN DETAIL SHEET (ENGLISH) (REV. 09-01-10)

ORIGINAL SCALE IN INCHES FOR REDUCED PLANS 0 1 2 3

UNIT: 59-3579
PROJECT NUMBER & PHASE: 040000006804
CONTRACT NO.: 04-235654

DISREGARD PRINTS BEARING EARLIER REVISION DATES

REVISION DATES: 03-23-16 11-16-15 11-23-15 02-04-16

SHEET 3 OF 11

FILE => 35e0050-c-sp01.dgn

USERNAME => s132175 DATE PLOTTED => 17-AUG-2016 TIME PLOTTED => 11:32

DIST	COUNTY	ROUTE	POST MILES TOTAL PROJECT	SHEET No.	TOTAL SHEETS
04	SM	101,114	1.3/2.5, 5.0/5.3	527	568

REGISTERED CIVIL ENGINEER 11-10-15 DATE

6-29-16
PLANS APPROVAL DATE

REGISTERED PROFESSIONAL ENGINEER LINAN WANG No. 54714 Exp. 12-31-17 CIVIL STATE OF CALIFORNIA

The State of California or its officers or agents shall not be responsible for the accuracy or completeness of scanned copies of this plan sheet.

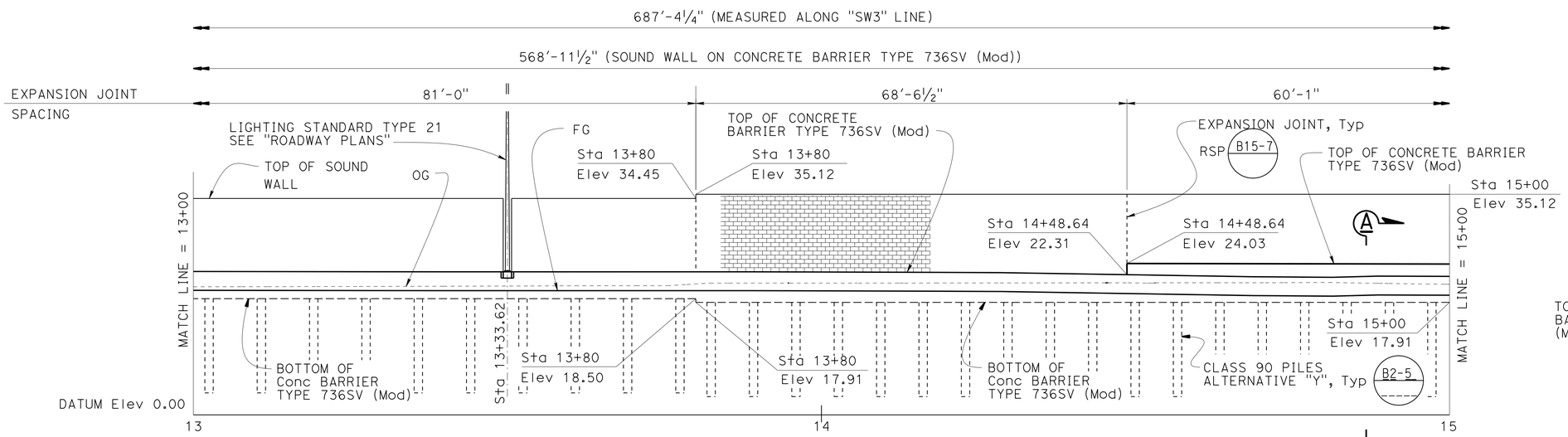

MIRROR ELEVATION
1" = 10'

NOTES
1. All Class 90, Alternative "Y" Piles are 26'-0" long from bottom of Concrete Barrier.
2. For FG see "ROADWAY PLANS".

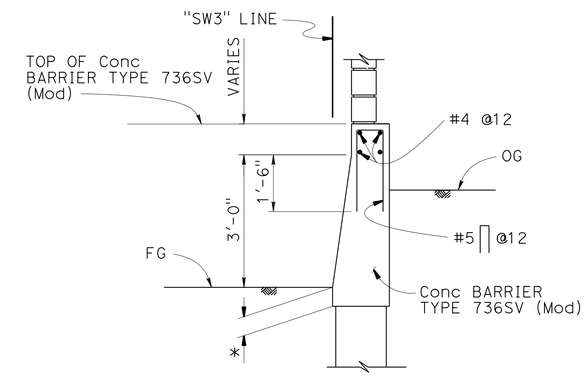

Reinforcing shown is in addition to the reinforcing in Conc Barrier Type 736SV.

* Design "H_e"

Sta 14+48.64 TO 15+80.00 RSP B15-6

SECTION A-A
½" = 1'-0"

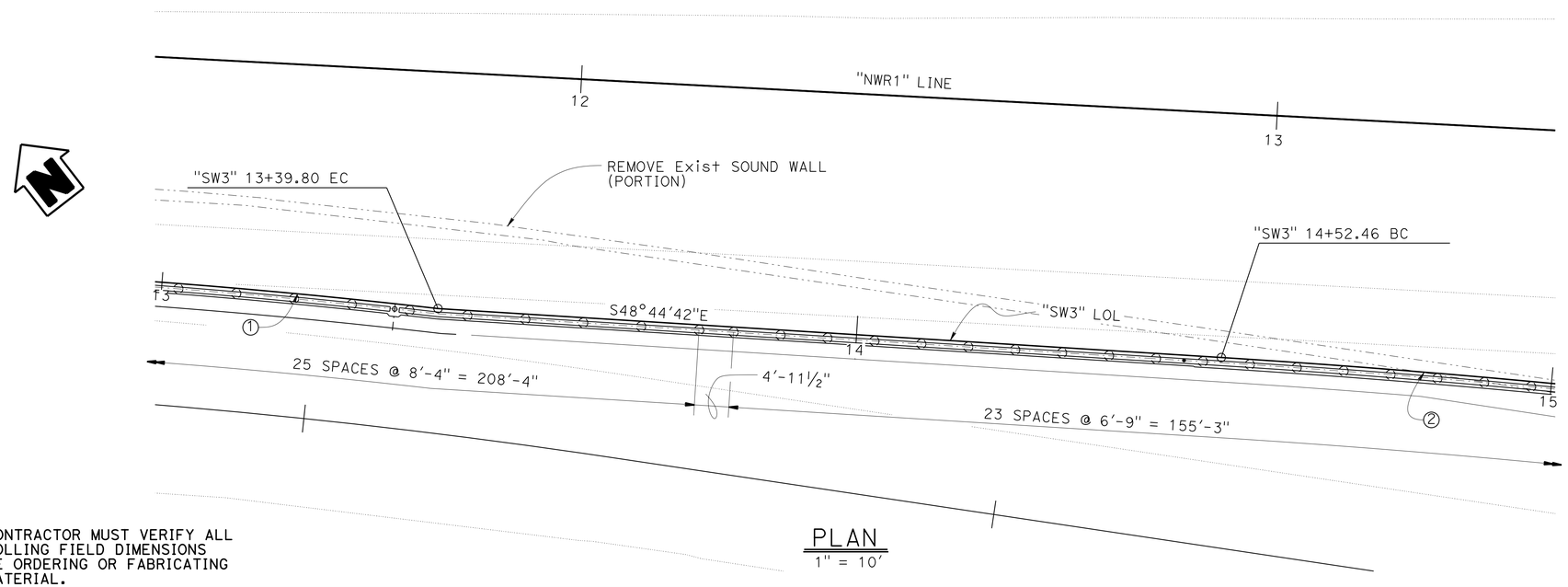

PLAN
1" = 10'

TOP ELEVATION OF Conc BARRIER TYPE 736SV (Mod.) "SW3" LINE

Sta	Elev
13+00	22.83
13+20	22.80
13+40	22.78
13+60	22.77
13+80	22.77
14+00	22.74
14+20	22.68
14+40	22.46
14+60	23.95
14+80	23.93
15+00	23.73

CURVE DATA				
	R	Δ	T	L
①	1000.00'	3°34'21"	31.19'	62.35'
②	1500.00'	7°24'50"	97.18'	194.09'

NOTE:
THE CONTRACTOR MUST VERIFY ALL CONTROLLING FIELD DIMENSIONS BEFORE ORDERING OR FABRICATING ANY MATERIAL.

	BY	CHECKED
DESIGN	A. Alcantara	L. Barnard
DETAILS	M. Lane / W. Zhang	L. Barnard
QUANTITIES	A. Alcantara	L. Wang

STATE OF CALIFORNIA
DEPARTMENT OF TRANSPORTATION

DIVISION OF ENGINEERING SERVICES
STRUCTURE DESIGN
DESIGN BRANCH 4

BRIDGE NO. 35E0050
POST MILE X

ROUTE 101/ WILLOW INTERCHANGE
SOUND WALL NO. 3
STRUCTURE PLAN NO. 2

STRUCTURES DESIGN DETAIL SHEET (ENGLISH) (REV. 09-01-10)

ORIGINAL SCALE IN INCHES FOR REDUCED PLANS 0 1 2 3

UNIT: 59-3579
PROJECT NUMBER & PHASE: 04000006804
CONTRACT NO.: 04-235654

DISREGARD PRINTS BEARING EARLIER REVISION DATES

REVISION DATES 11-16-15 11-23-15 10-28-15 11-04-15

SHEET 4 OF 11

FILE => 35e0050-c-sp02.dgn

USERNAME => s132175 DATE PLOTTED => 17-AUG-2016 TIME PLOTTED => 11:32

DIST	COUNTY	ROUTE	POST MILES TOTAL PROJECT	SHEET No.	TOTAL SHEETS
04	SM	101,114	1.3/2.5, 5.0/5.3	528	568

REGISTERED CIVIL ENGINEER 11-10-15 DATE

6-29-16
PLANS APPROVAL DATE

REGISTERED PROFESSIONAL ENGINEER LINAN WANG No. 54714 Exp. 12-31-17 CIVIL STATE OF CALIFORNIA

The State of California or its officers or agents shall not be responsible for the accuracy or completeness of scanned copies of this plan sheet.

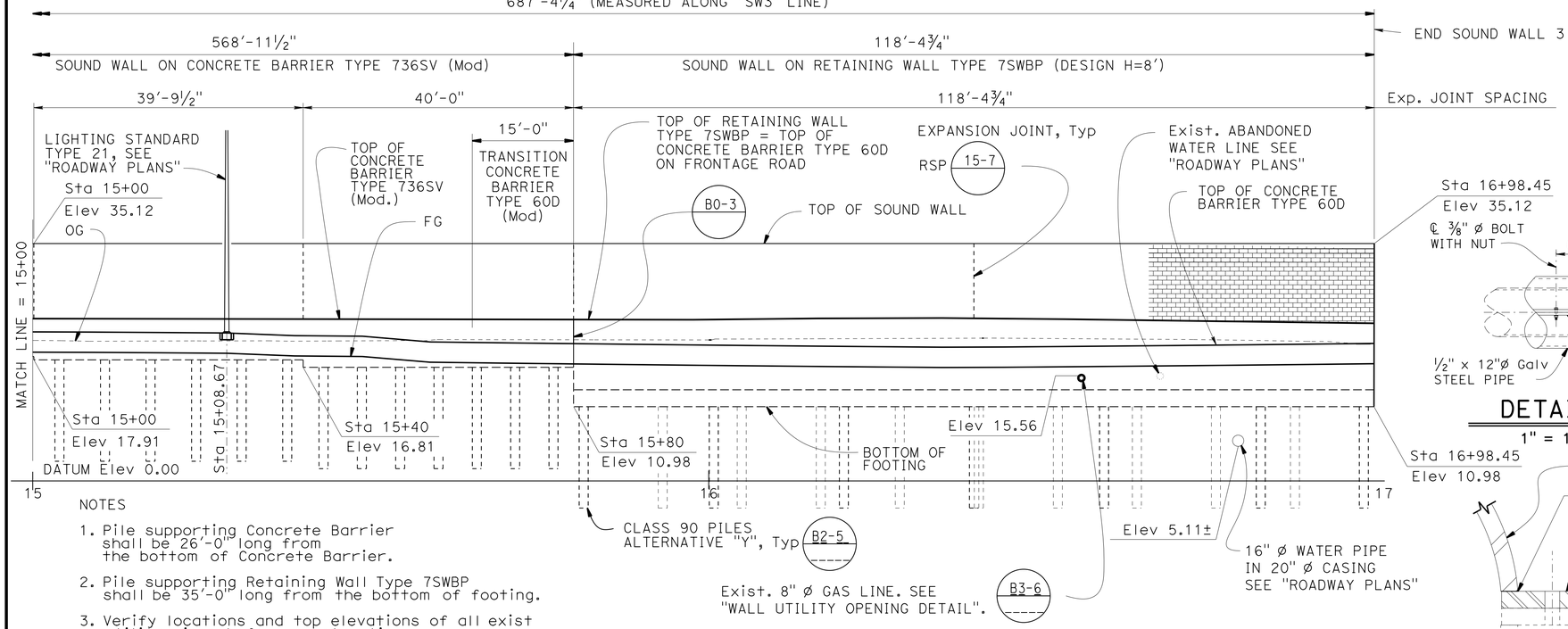

NOTES

1. Pile supporting Concrete Barrier shall be 26'-0" long from the bottom of Concrete Barrier.
2. Pile supporting Retaining Wall Type 7SWBP shall be 35'-0" long from the bottom of footing.
3. Verify locations and top elevations of all exist utility pipes before construction.
4. For FG see "ROADWAY PLANS".
5. For Transition Details see "RETAINING WALL DETAILS" sheet.

MIRROR ELEVATION
1" = 10'

CURVE DATA				
	R	Δ	T	L
②	1250.00'	7°24'50"	97.18'	194.09'

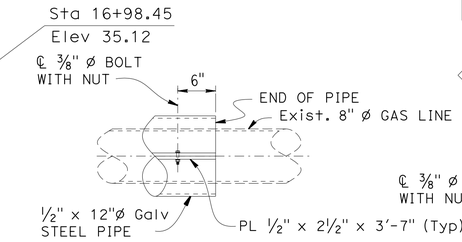

DETAIL "G"
1" = 1'-0"

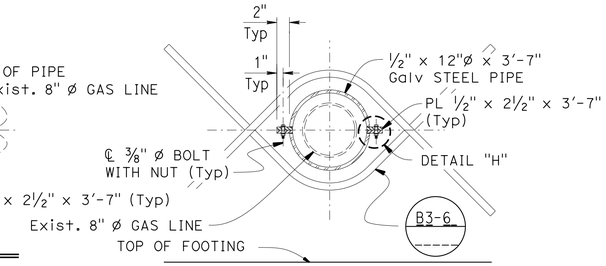

PART WALL ELEVATION
1" = 1'-0"

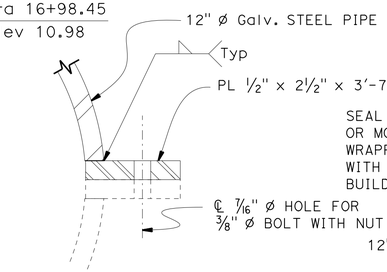

DETAIL "H"
6" = 1'-0"

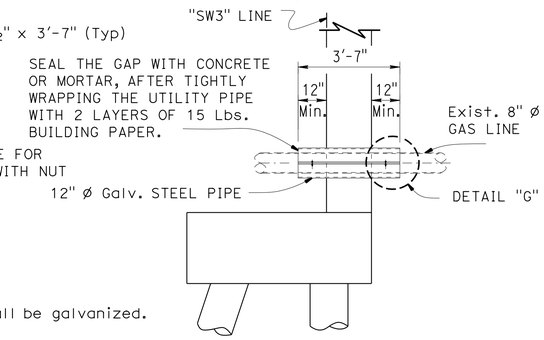

PART WALL SECTION
½" = 1'-0"

NOTES

1.) All plates, bolts, washers and nuts shall be galvanized.

2.) All steel shall be ASTM Grade 36.

WALL UTILITY OPENING DETAIL
AS NOTED

B3-6

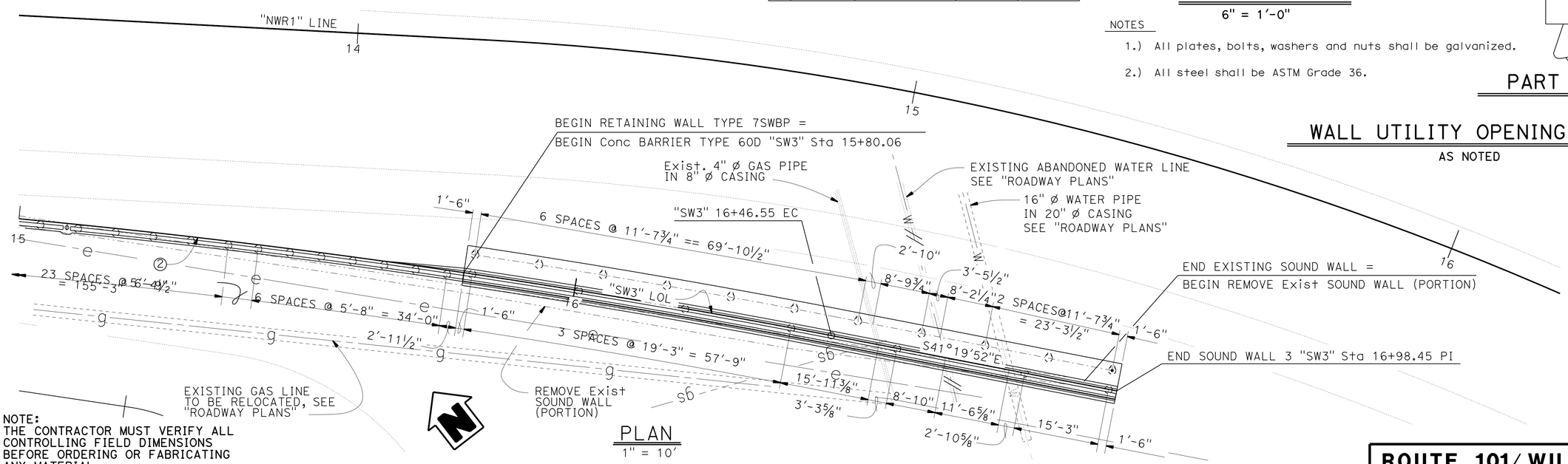

NOTE:
THE CONTRACTOR MUST VERIFY ALL CONTROLLING FIELD DIMENSIONS BEFORE ORDERING OR FABRICATING ANY MATERIAL.

PLAN
1" = 10'

TOP ELEVATION OF CONCRETE BARRIER TYPE 736SV (Mod.) "SW3" LINE

Sta	Elev
15+00	23.73
15+20	23.75
15+40	23.77
15+60	23.86
15+80	23.88
16+00	23.88
16+20	24.06
16+40	24.05
16+60	23.83
16+80	23.56
16+98.05	23.32

	BY	CHECKED
DESIGN	A. Alcantara	L. Barnard
DETAILS	M. Lane	L. Barnard
QUANTITIES	A. Alcantara	L. Wang

STATE OF CALIFORNIA
DEPARTMENT OF TRANSPORTATION

DIVISION OF ENGINEERING SERVICES
STRUCTURE DESIGN
DESIGN BRANCH 4

BRIDGE NO. 35E0050
POST MILE X

ROUTE 101/ WILLOW INTERCHANGE
SOUND WALL NO. 3
STRUCTURE PLAN NO. 3

STRUCTURES DESIGN DETAIL SHEET (ENGLISH) (REV. 09-01-10)

ORIGINAL SCALE IN INCHES FOR REDUCED PLANS 0 1 2 3

UNIT: 59-3579
PROJECT NUMBER & PHASE: 04000006804
CONTRACT NO.: 04-235654

DISREGARD PRINTS BEARING EARLIER REVISION DATES

REVISION DATES 11-04-15 11-16-15 11-23-15 02-04-16

SHEET 5 OF 11

FILE => 35e0050-c-sp03.dgn

USERNAME => s132175 DATE PLOTTED => 17-AUG-2016 TIME PLOTTED => 11:32

DIST	COUNTY	ROUTE	POST MILES TOTAL PROJECT	SHEET No.	TOTAL SHEETS
04	SM	101,114	1.3/2.5, 5.0/5.3	529	568

REGISTERED CIVIL ENGINEER 11-10-15 DATE

6-29-16
PLANS APPROVAL DATE

REGISTERED PROFESSIONAL ENGINEER LINAN WANG No. 54714 Exp 12-31-17 CIVIL STATE OF CALIFORNIA

The State of California or its officers or agents shall not be responsible for the accuracy or completeness of electronic copies of this plan sheet.

CURVE DATA

No.	R	Δ	T	L
1	3000.00	02°35'50"	68.01	135.99
2	1000.00	03°34'21"	31.19	62.35
3	1000.00	08°45'40"	76.60	152.91

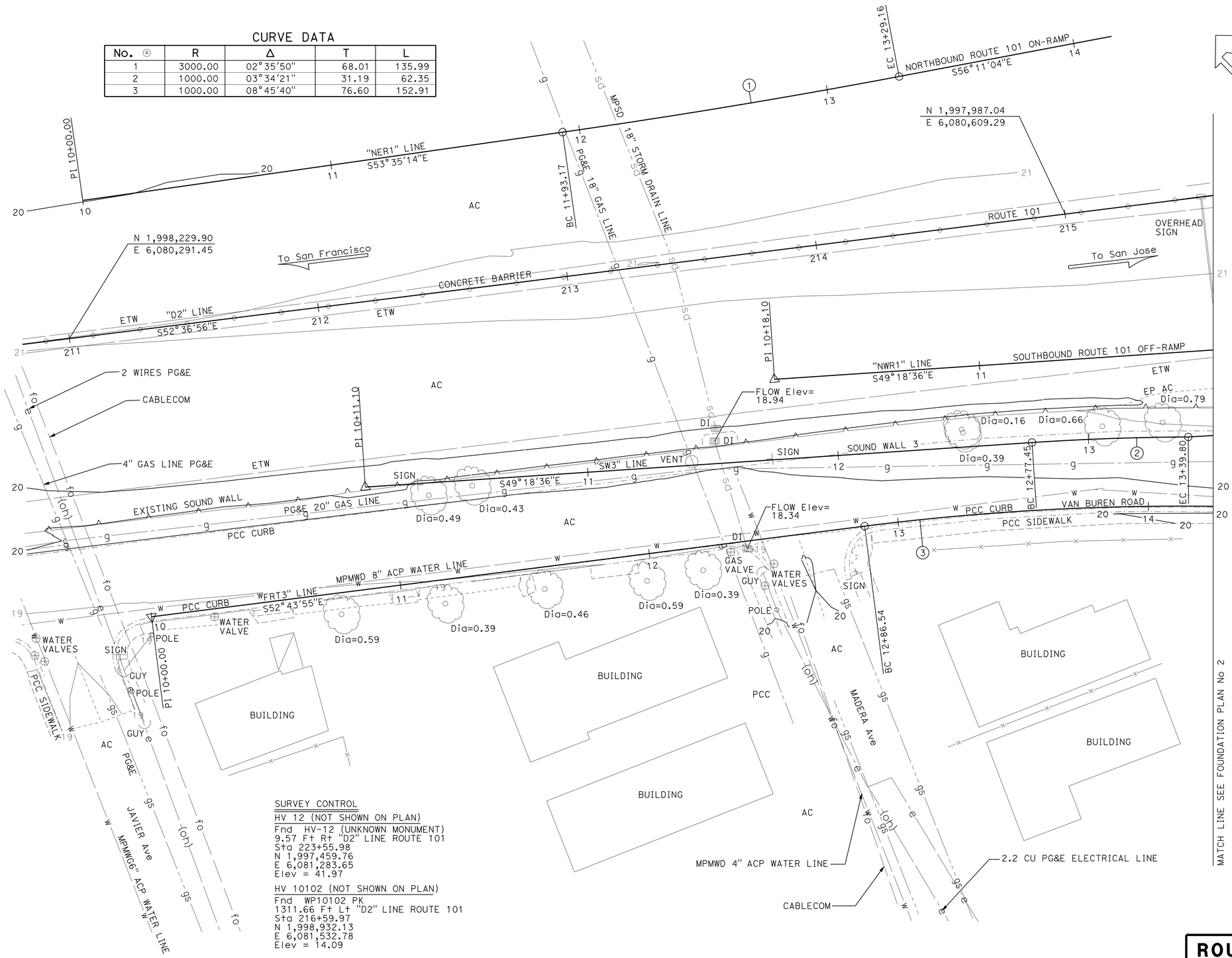

SURVEY CONTROL

HV 12 (NOT SHOWN ON PLAN)
Fnd HV-12 (UNKNOWN MONUMENT)
9.57 Ft Rt "D2" LINE ROUTE 101
Sta 223+55.98
N 1,997,459.76
E 6,081,283.65
Elev = 41.97

HV 10102 (NOT SHOWN ON PLAN)
Fnd WP10102 PK
1311.66 Ft Lt "D2" LINE ROUTE 101
Sta 216+59.97
N 1,998,932.13
E 6,081,532.78
Elev = 14.09

ROUTE 101/ WILLOW INTERCHANGE

SOUND WALL 3

FOUNDATION PLAN No 1

PRELIMINARY INVESTIGATION SECTION

SCALE	VERT.DATUM NGVD29	PHOTOGRAMMETRY AS OF: X		
1"=20'	HORZ.DATUM NAD83 (1991.35)	SURVEYED	BY DISTRICT	CHECKED BY C. FASSETT 01/2015
ALIGNMENT TIES Dist TRAVERSE SHEET		DRAFTED	BY T. ZOLNIKOV 01/2015	CHECKED BY L. LEW 01/2015

DESIGN	BY A. Alcantara	CHECKED L. Barnard
DETAILS	BY M. Lane	CHECKED L. Barnard
QUANTITIES	BY A. Alcantara	CHECKED L. Wang

STATE OF CALIFORNIA
DEPARTMENT OF TRANSPORTATION

DIVISION OF ENGINEERING SERVICES
STRUCTURE DESIGN
DESIGN BRANCH 4

BRIDGE NO. 35E0050
POST MILE --------

STRUCTURES FOUNDATION PLAN SHEET (ENGLISH) (REV. 09-01-10)

ORIGINAL SCALE IN INCHES FOR REDUCED PLANS 0 1 2 3

UNIT: 3646
PROJECT NUMBER & PHASE: 0400000680 4
CONTRACT NO.: 04-235654

SUBMITTAL DATE	REVISION DATES			SHEET	OF
04/20/15	11/19/2015			6	11

FILE => 35e0050-e-fp101.dgn

USERNAME => s132175 DATE PLOTTED => 17-AUG-2016 TIME PLOTTED => 11:32

DIST	COUNTY	ROUTE	POST MILES TOTAL PROJECT	SHEET No.	TOTAL SHEETS
04	SM	101,114	1.3/2.5, 5.0/5.3	530	568

REGISTERED CIVIL ENGINEER 11-10-15 DATE

6-29-16
PLANS APPROVAL DATE

REGISTERED PROFESSIONAL ENGINEER LINAN WANG No. 54714 Exp. 12-31-17 CIVIL STATE OF CALIFORNIA

The State of California or its officers or agents shall not be responsible for the accuracy or completeness of electronic copies of this plan sheet.

CURVE DATA

No. ⓔ	R	Δ	T	L
4	550.00	38°27'06"	191.81	369.11
5	1500.00	07°24'50"	97.18	194.09
6	27.00	134°10'04"	63.87	63.23
7	70.00	47°51'43"	31.06	58.47
8	430.00	40°37'47"	159.19	304.92

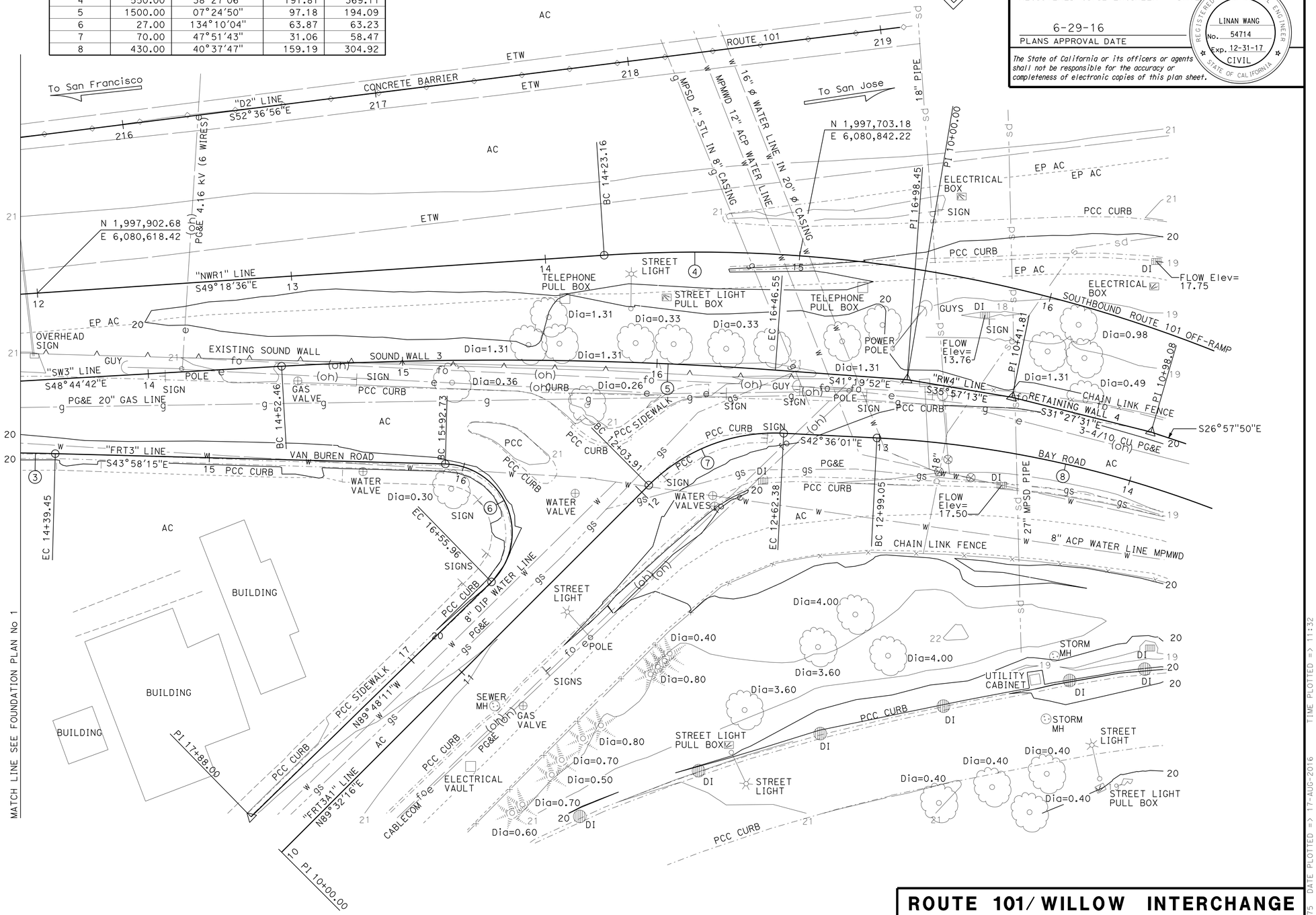

PRELIMINARY INVESTIGATION SECTION

SCALE 1"=20'	VERT.DATUM NGVD29	PHOTOGRAMMETRY AS OF: X			
	HORZ.DATUM NAD83 (1991.35)	SURVEYED	BY DISTRICT	CHECKED	BY C. FASSETT 01/2015
	ALIGNMENT TIES Dist TRAVERSE SHEET	DRAFTED	BY T. ZOLNIKOV 01/2015	CHECKED	BY L. LEW 01/2015

DESIGN	BY A. Alcantara	CHECKED L. Barnard
DETAILS	BY M. Lane	CHECKED L. Barnard
QUANTITIES	BY A. Alcantara	CHECKED L. Wang

STATE OF CALIFORNIA
DEPARTMENT OF TRANSPORTATION

DIVISION OF ENGINEERING SERVICES
STRUCTURE DESIGN
DESIGN BRANCH 4

BRIDGE NO. 35E0050
POST MILE -----

ROUTE 101/ WILLOW INTERCHANGE
SOUND WALL 3
FOUNDATION PLAN No 2

STRUCTURES FOUNDATION PLAN SHEET (ENGLISH) (REV. 09-01-10)

ORIGINAL SCALE IN INCHES FOR REDUCED PLANS 0 1 2 3

UNIT: 3646
PROJECT NUMBER & PHASE: 0400000680 4 CONTRACT NO.: 04-235654

SUBMITTAL DATE	REVISION DATES				SHEET	OF
04/20/15	11/19/2015				7	11

FILE => 35e0050-e-fp102.dgn

USERNAME => s132175 DATE PLOTTED => 17-AUG-2016 TIME PLOTTED => 11:32

DIST	COUNTY	ROUTE	POST MILES TOTAL PROJECT	SHEET No.	TOTAL SHEETS
04	SM	101,114	1.3/2.5, 5.0/5.3	531	568

REGISTERED CIVIL ENGINEER 11-10-15 DATE

6-29-16
PLANS APPROVAL DATE

REGISTERED PROFESSIONAL ENGINEER LINAN WANG No. 54714 Exp. 12-31-17 CIVIL STATE OF CALIFORNIA

The State of California or its officers or agents shall not be responsible for the accuracy or completeness of scanned copies of this plan sheet.

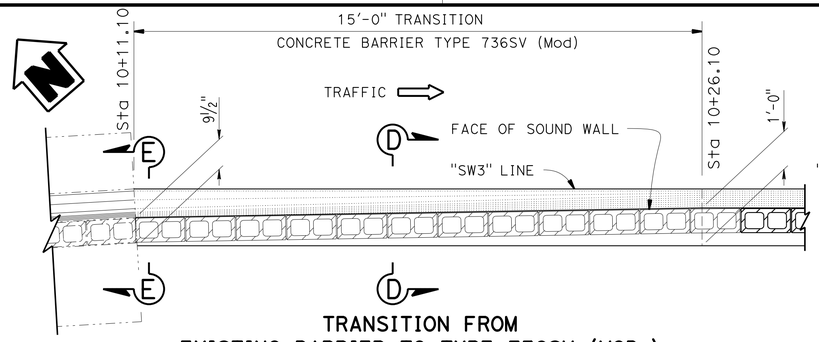

TRANSITION FROM EXISTING BARRIER TO TYPE 736SV (MOD.)

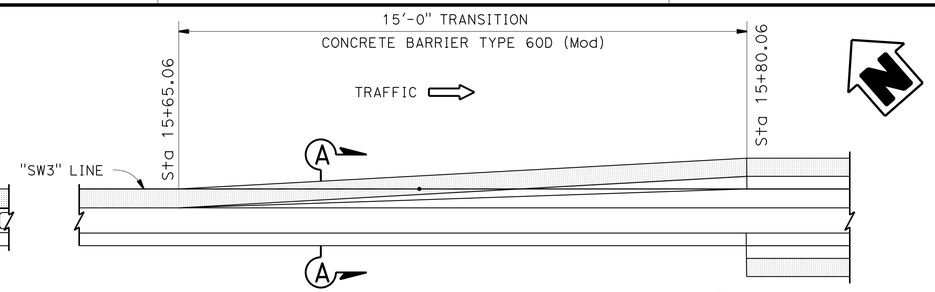

TRANSITION FROM TYPE 736SV (MOD.) TO TYPE 60D

CONCRETE BARRIER TRANSITION PART PLAN

1/2" = 1'-0"

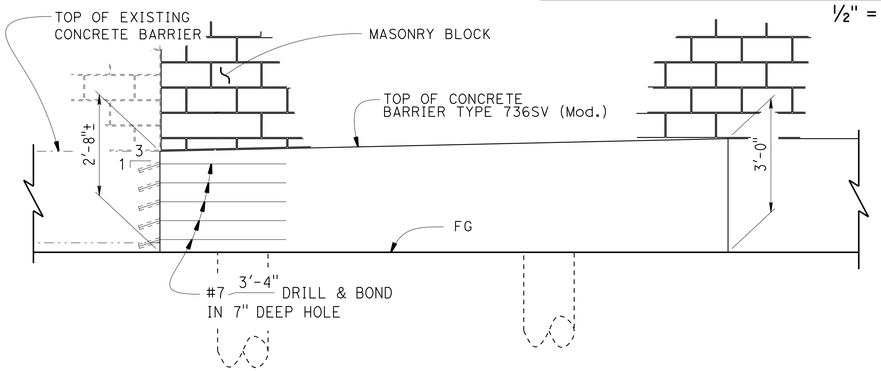

BARRIER TRANSITION FROM EXISTING BARRIER TO TYPE 736SV (MOD.) ELEVATION

1/2" = 1'-0"

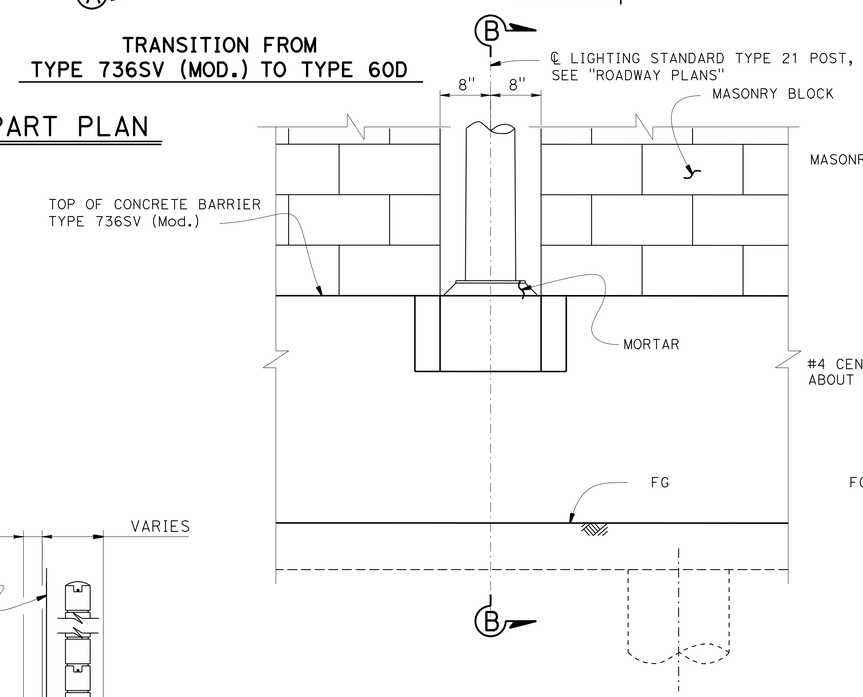

PART ELEVATION @ LIGHTING STANDARD TYPE 21

1" = 1'-0"

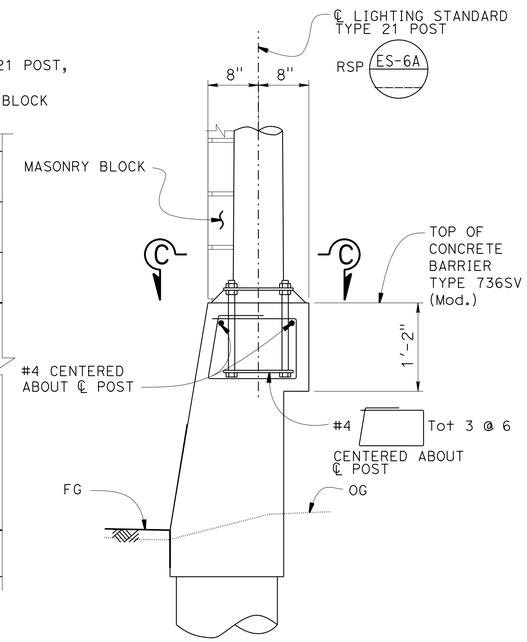

SECTION B-B

1" = 1'-0"

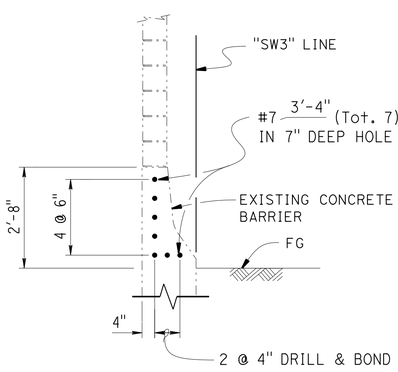

SECTION E-E

1/2" = 1'-0"

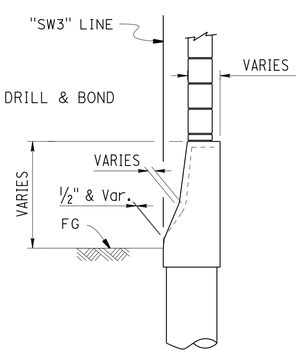

SECTION D-D

1/2" = 1'-0"

NOTE
For details not shown, see STANDARD PLAN
RSP B15-6

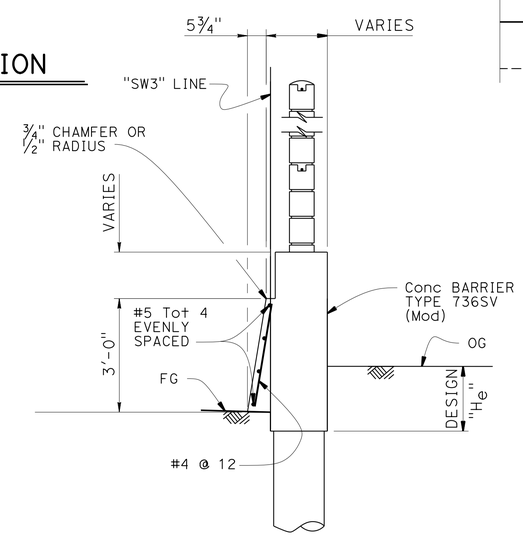

SECTION A-A

1/2" = 1'-0"

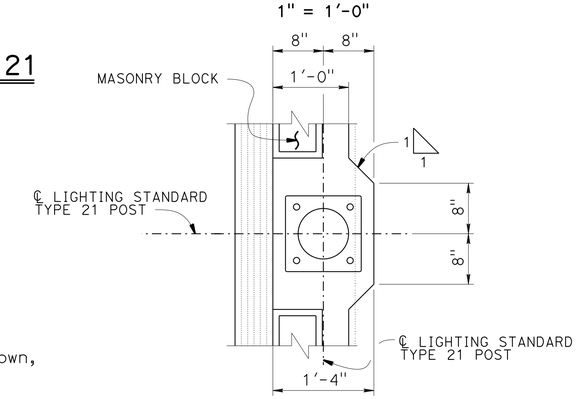

SECTION C-C

1/2" = 1'-0"

NOTE
For details not shown, see STANDARD PLAN
RSP B15-6

NOTE:
THE CONTRACTOR SHALL VERIFY ALL CONTROLLING FIELD DIMENSIONS BEFORE ORDERING OR FABRICATING ANY MATERIAL.

	BY	CHECKED
DESIGN	A. Alcantara	L. Barnard
DETAILS	M. Lane	L. Barnard
QUANTITIES	A. Alcantara	L. Wang

STATE OF CALIFORNIA
DEPARTMENT OF TRANSPORTATION

DIVISION OF ENGINEERING SERVICES
STRUCTURE DESIGN
DESIGN BRANCH 4

BRIDGE NO. 35E0050
POST MILE X

ROUTE 101/ WILLOW INTERCHANGE
SOUND WALL NO. 3
RETAINING WALL DETAILS

STRUCTURES DESIGN DETAIL SHEET (ENGLISH) (REV. 09-01-10)

ORIGINAL SCALE IN INCHES FOR REDUCED PLANS 0 1 2 3

UNIT: 59-3579
PROJECT NUMBER & PHASE: 04000006804
CONTRACT NO.: 04-235654

DISREGARD PRINTS BEARING EARLIER REVISION DATES

REVISION DATES 11-25-15 02-09-16 03-24-16 11-16-16

SHEET 8 OF 11

FILE => 35e0050-f-dts.dgn

USERNAME => s132775 DATE PLOTTED => 17-AUG-2016 TIME PLOTTED => 11:32

DIST	COUNTY	ROUTE	POST MILES TOTAL PROJECT	SHEET No.	TOTAL SHEETS
04	SM	101,114	1.3/2.5, 5.0/5.3	532	568

REGISTERED CIVIL ENGINEER 11-10-15 DATE

6-29-16
PLANS APPROVAL DATE

REGISTERED PROFESSIONAL ENGINEER LINAN WANG No. 54714 Exp. 12-31-17 CIVIL STATE OF CALIFORNIA

The State of California or its officers or agents shall not be responsible for the accuracy or completeness of electronic copies of this plan sheet.

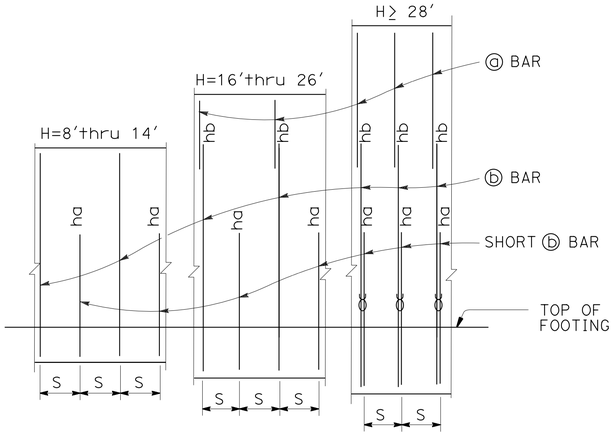

ELEVATION

NOTES:
"ha", "hb" above ⓑ bars indicate distance from top of footing to upper end of ⓑ bars, see table.
"S" is ⓑ bar spacing, see table.

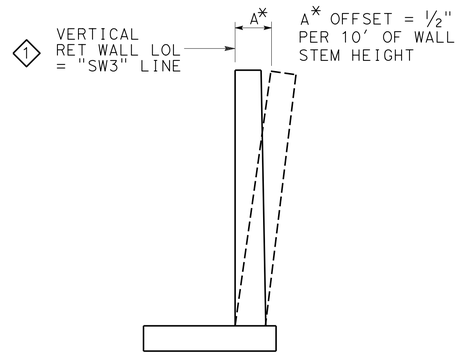

WALL OFFSET

NO SCALE

Values for offsetting forms to be determined by the engineer

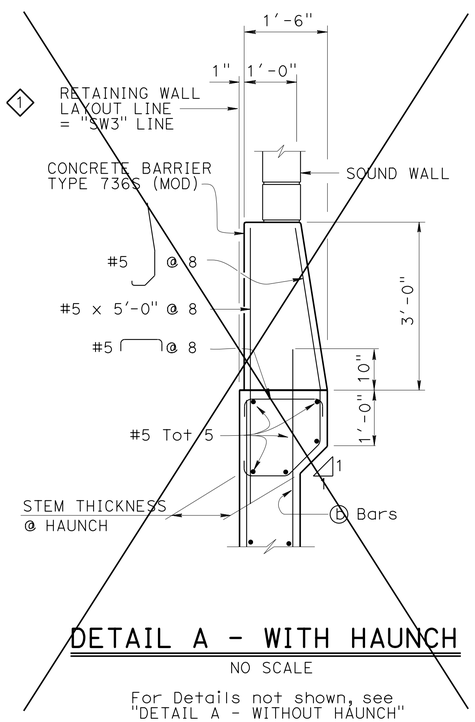

DETAIL A - WITH HAUNCH

NO SCALE

For Details not shown, see "DETAIL A - WITHOUT HAUNCH"

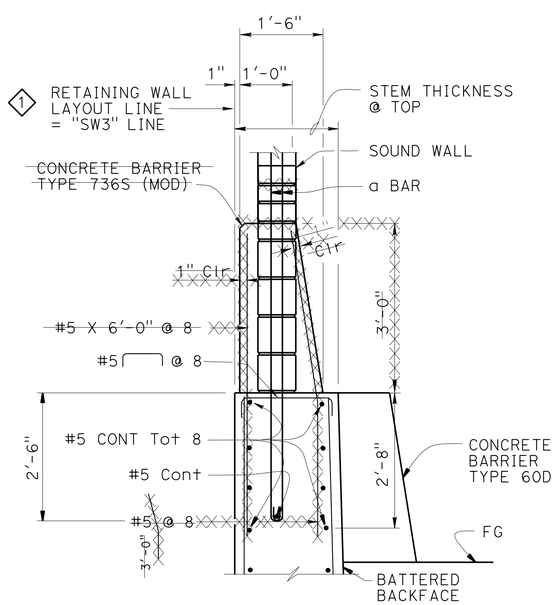

DETAIL A - WITHOUT HAUNCH

NO SCALE

DESIGN DATA

Design: AASHTO LRFD Bridge Design Specifications, 4th edition with California Amendments

WS: 33 psf on Sound wall and Barrier

LS: Varied surcharge on level ground surface

CT: 54 kip maximum traffic impact loading evenly distributed over 10 feet at top of the barrier and 1:1 distribution down and outward

EQE: Mononabe-Okabe Method
K_h = 0.3
K_v = 0.0

Soil: ϕ = 34°
γ = 120 pcf

Reinforced Concrete: f'c = 3600 psi
fy = 60,000 psi

Load Combinations and Limit States

Service I	Q=1.00DC+1.00EV+1.00EH+1.00LS+0.30WS
Service II	Q=1.00DC+1.00EV+1.00EH+1.00WS
Strength I	Q=aDC+βEV+1.50EH+1.75LS
Strength III	Q=aDC+βEV+1.50EH+1.40WS
Strength V	Q=aDC+βEV+1.50EH+1.35LS+0.40WS
Extreme I	Q=1.00DC+1.00EV+1.00EH+1.00EQD+1.00EQE
Extreme II	Q=1.00DC+1.00EV+1.00EH+1.00CT

Where:
Q: Force Effects
a: 1.25 or 0.90, Which ever Controls Design
β: 1.35 or 1.00, which ever Controls Design
DC: Dead Load of Structure Components
EV: Vertical Earth Fill Pressure
LS: Live Load Surcharge
EQE: Seismic Earth Pressure
EQD: Soil and Structure Components Inertia. Soil inertia ignored for stem design
WS: Wind Load on Sound wall and Barrier
CT: Vehicular Collision Force

NOTES:

1. All piles are class 90 concrete piles.
2. Pile batter shown are 1:3.
3. Minimum distance between center pile and edge of footing is 1'-6".
4. Lateral resistance of each pile:
   30 kip for strength limit states.
   40 kip for extreme limit states.
   Pile group reduction factors are not applied, unless soil passive resistance on footing is included.
5. Maximum spacing between piles is shown in the table. Reduce to suit the length of footing.
6. Minimum distance between any two piles is 3'-0". Reduce to suit the length of footing.
7. For sound wall and retaining wall architectural finish or texture, see details elsewhere in Project Plans.
8. For details not shown and drainage notes, see B3-5
9. Footing cover, 2'-0" minimum.
10. For sound wall and reinforcement see "SOUND WALL - MASONRY BLOCK WITH BARRIER ON RETAINING WALL" sheets.
11. For H=6' through 14', extend ⓑ bar into Barrier for stem with haunch.

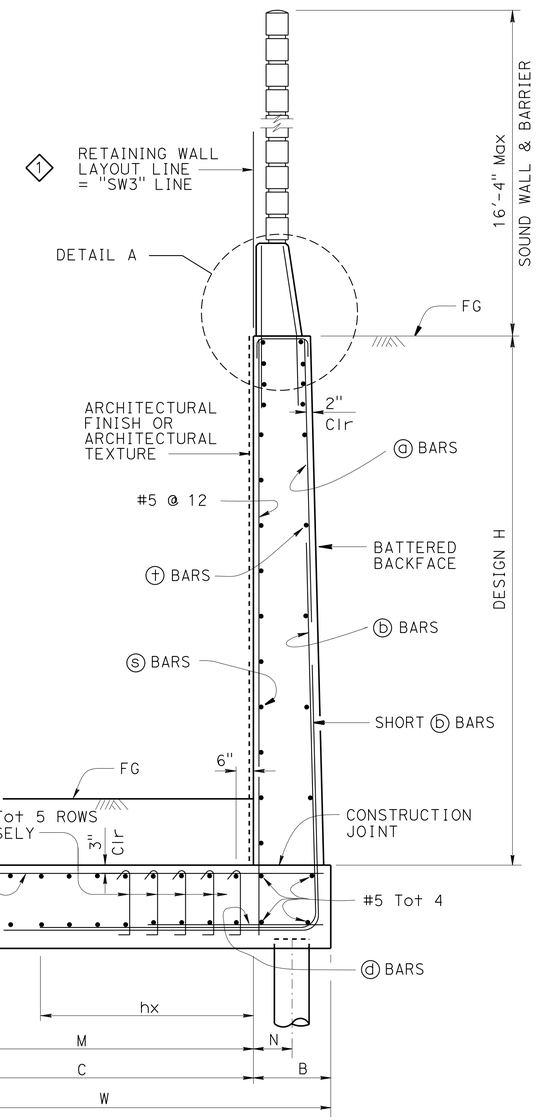

PILE FOOTING SECTION

NO SCALE

ROUTE 101/ WILLOW INTERCHANGE
SOUND WALL 3
RETAINING WALL TYPE 7SWBP - DETAILS No. 1

STANDARD DRAWING
FILE NO. xs14-410-1
APPROVAL DATE October 2014

1 ADDED CALL OUT

STATE OF CALIFORNIA DEPARTMENT OF TRANSPORTATION

DIVISION OF ENGINEERING SERVICES

BRIDGE NO. 35E0050
POST MILE

DS OSD 2147A (ENGLISH STANDARD DRAWING "XS" BORDER REV. (02-02-11)

ORIGINAL SCALE IN INCHES FOR REDUCED PLANS 0 1 2 3

UNIT: 59-3579
PROJECT NUMBER & PHASE: 04000006804
CONTRACT NO.: 04-235654

DISREGARD PRINTS BEARING EARLIER REVISION DATES

REVISION DATES 6-19-14 8-6-14 6-25-15

SHEET 9 OF 11

FILE => 35e0050-x-xs14-410-1.dgn

USERNAME => s132775 DATE PLOTTED => 17-AUG-2016 TIME PLOTTED => 11:32

DIST	COUNTY	ROUTE	POST MILES TOTAL PROJECT	SHEET No.	TOTAL SHEETS
04	SM	101,114	1.3/2.5, 5.0/5.3	533	568

REGISTERED CIVIL ENGINEER 11-10-15 DATE

6-29-16
PLANS APPROVAL DATE

REGISTERED PROFESSIONAL ENGINEER
LINAN WANG
No. 54714
Exp. 12-31-17
CIVIL
STATE OF CALIFORNIA

The State of California or its officers or agents shall not be responsible for the accuracy or completeness of electronic copies of this plan sheet.

TABLE OF WALL DIMENSIONS, REINFORCING STEEL, AND PILE SPACINGS

DESIGN H	STEM WITH HAUNCH				STEM WITHOUT HAUNCH								
	8′	10′	12′	14′	16′	18′	20′	22′	24′	26′	28′	30′	32′
W	6′-6"	7′-3"	7′-9"	8′-0"	9′-0"	9′-3"	10′-3"	11′-3"	12′-3"	13′-0"	14′-3"	15′-3"	17′-0"
C	5′-3"	6′-0"	6′-3"	6′-6"	7′-3"	7′-3"	8′-0"	8′-6"	9′-6"	10′-0"	10′-10"	11′-6"	13′-2"
B	1′-3"	1′-3"	1′-6"	1′-6"	1′-9"	2′-0"	2′-3"	2′-9"	2′-9"	3′-0"	3′-5"	3′-9"	3′-10"
F	2′-6"	2′-6"	2′-9"	2′-9"	2′-9"	2′-9"	3′-0"	3′-0"	3′-3"	3′-6"	3′-9"	4′-0"	4′-3"
STEM THICKNESS AT TOP					1′-7"	1′-11"	2′-0"	2′-0"	2′-0"	2′-0"	2′-0"	2′-3"	2′-3"
STEM THICKNESS AT HAUNCH	1′-0"	1′-0"	1′-3"	1′-3"									
BATTER	0	0	0	0	0	0	0	1/4:12	1/4:12	1/4:12	1/2:12	1/2:12	1/2:12
M	3′-9"	4′-6"	4′-9"	5′-0"	5′-9"	5′-9"	6′-6"	7′-0"	8′-0"	8′-6"	9′-4"	10′-0"	11′-8"
N	0′-3"	0′-3"	0′-0"	0′-0"	0′-3"	0′-6"	0′-9"	1′-3"	1′-3"	1′-6"	1′-11"	2′-3"	2′-4"
ROW 1 SPACING	12′-0"	12′-0"	10′-0"	9′-6"	8′-0"	7′-0"	6′-0"	4′-0"	4′-0"	4′-0"	4′-0"	3′-9"	4′-0"
ROW 2 SPACING	20′-0"	20′-0"	16′-0"	14′-0"	14′-0"	12′-0"	10′-0"	10′-0"	8′-0"	4′-0"	7′-6"	6′-6"	4′-0"
ROM 3 SPACING											6′-0"	5′-0"	4′-0"
ⓐ BARS					#5 @ 14	#6 @ 14	#6 @ 13	#6 @ 13	#6 @ 11	#7 @ 12	#7 @ 11	#7 @ 10	#8 @ 11
ⓑ BARS	#5 @ 6	#5 @ 5.5	#5 @ 4.5	#6 @ 5	#8 @ 7	#9 @ 7	#9 @ 6.5	#9 @ 6.5	#9 @ 5.5	#10 @ 6	#10 @ 11ȣ	#10 @ 10ȣ	#11 @ 11ȣ
ha	7′-10"	9′-10"	6′-0"	6′-0"	6′-3"	7′-3"	7′-6"	9′-0"	9′-9"	10′-6"	11′-3"	12′-0"	14′-0"
hb					12′-0"	11′-9"	13′-0"	14′-6"	15′-6"	18′-6"	20′-6"	21′-6"	23′-0"
hx	5′-0"	5′-9"	6′-0"	6′-3"	7′-0"	7′-0"	7′-9"	8′-3"	6′-3"	9′-6"	10′-7"	10′-6"	12′-11"
ⓓ BARS	#5 @ 12	#5 @ 11	#5 @ 9	#5 @ 10	#5 @ 14	#5 @ 14	#5 @ 13	#5 @ 13	#5 @ 11	#5 @ 12	#5 @ 11	#5 @ 10	#5 @ 11
ⓓ BAR LENGTH	3′-6"	4′-6"	4′-6"	6′-0"	7′-0"	7′-0"	7′-9"	10′-9"	8′-9"	12′-6"	13′-9"	14′-9"	16′-6"
ⓔ BARS											#4 @ 11	#4 @ 10	#4 @ 11
ⓢ Bars	#4 @ 12	#4 @ 12	#5 @ 15	#5 @ 15	#5 @ 12	#5 @ 12	#6 @ 12	#6 @ 12	#6 @ 12	#6 @ 12	#6 @ 12	#7 @ 12	#7 @ 12
ⓣ Bars	#4 @ 18	#4 @ 18	#4 @ 18	#4 @ 18	#4 @ 12	#4 @ 12	#4 @ 12	#4 @ 12	#4 @ 12	#5 @ 12	#5 @ 12	#5 @ 12	#5 @ 12
H_D (k/ft), SVC	2.6	3.3	4.2	5.1	6.2	7.4	9.0	10.4	12.5	14.5	17.0	19.3	21.8
H_D (k/ft), Str	4.1	5.2	6.6	8.0	9.4	11.1	13.4	16.0	18.8	21.8	25.6	29.1	32.8
H_D (k/ft), ext	5.0	6.5	8.6	10.5	13.0	15.7	19.0	22.5	26.3	30.5	35.7	41.0	46.5

LEGEND:

ȣ : 2 bar bundle
H_D : Factored Horizontal Driving Force
SVC : Service Limit State
Str : Strength Limit State
ext : Extreme Event Limit State

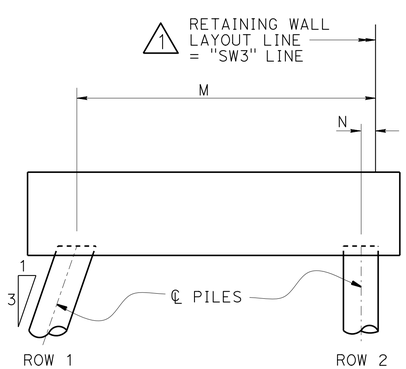

H = 8′ THROUGH 14′

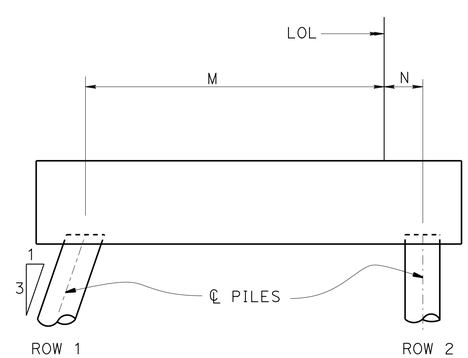

H = 16′ THROUGH 26′

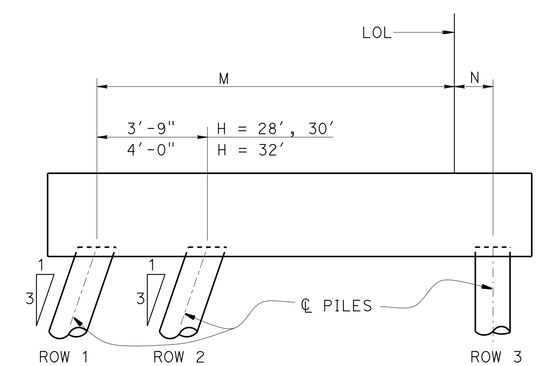

H = ≥ 28′

PILE PATTERN

No Scale

STANDARD DRAWING

FILE NO. xs14-410-2

APPROVAL DATE July 2014

1 ADDED CALL OUT

STATE OF CALIFORNIA
DEPARTMENT OF TRANSPORTATION

DIVISION OF ENGINEERING SERVICES

BRIDGE NO. 35E0050

POST MILE

ROUTE 101/ WILLOW INTERCHANGE
SOUND WALL 3
RETAINING WALL TYPE 7SWBP - DETAILS No. 2

DS OSD 2147A (ENGLISH STANDARD DRAWING "XS" BORDER REV. (02-02-11)

ORIGINAL SCALE IN INCHES FOR REDUCED PLANS 0 1 2 3

UNIT: 59-3579
PROJECT NUMBER & PHASE: 04000006804
CONTRACT NO.: 04-235654

DISREGARD PRINTS BEARING EARLIER REVISION DATES

REVISION DATES: 6-19-14 11-04-15

SHEET 10 OF 11

FILE => 35e0050-x-xs14-410-2.dgn

USERNAME => s13321T5 DATE PLOTTED => 17-AUG-2016 TIME PLOTTED => 11:32

DIST	COUNTY	ROUTE	POST MILES TOTAL PROJECT	SHEET No.	TOTAL SHEETS
04	SM	101,114	1.3/2.5, 5.0/5.3	534	568

REGISTERED CIVIL ENGINEER 10-20-15 DATE

6-29-16
PLANS APPROVAL DATE

PROFESSIONAL GEOLOGIST Matthew Gaffney No. 8045 Exp. 6-30-16 STATE OF CALIFORNIA

The State of California or its officers or agents shall not be responsible for the accuracy or completeness of electronic copies of this plan sheet.

This LOTB sheet was prepared in accordance with the Caltrans Soil & Rock Logging, Classification, & Presentation Manual (2010 Edition).

See 2010 Standard Plans A10F and A10G for Soil Legend, and A10H for Rock Legend.

BENCH MARK

HV 12
Fnd HV-12 (unknown monument)
9.57 FT Rt "D2" LINE ROUTE 101
Sta 223+55.98
N 1,997,459.76
E 6,081,283.65
Elev = 41.97

HV 10142
Fnd WP10102 PK
1311.66 Ft Lt "D2" LINE ROUTE 101
Sta 216+59.97
N 1,998,932.13
E 6,081,532.78
Elev = 14.09

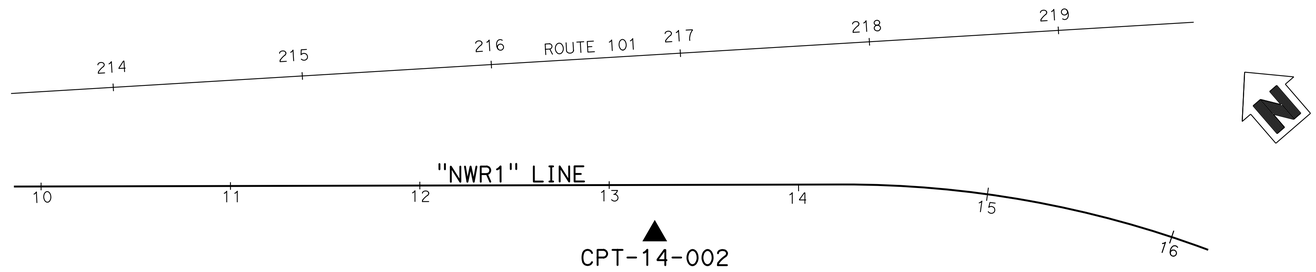

PLAN
1" = 40'

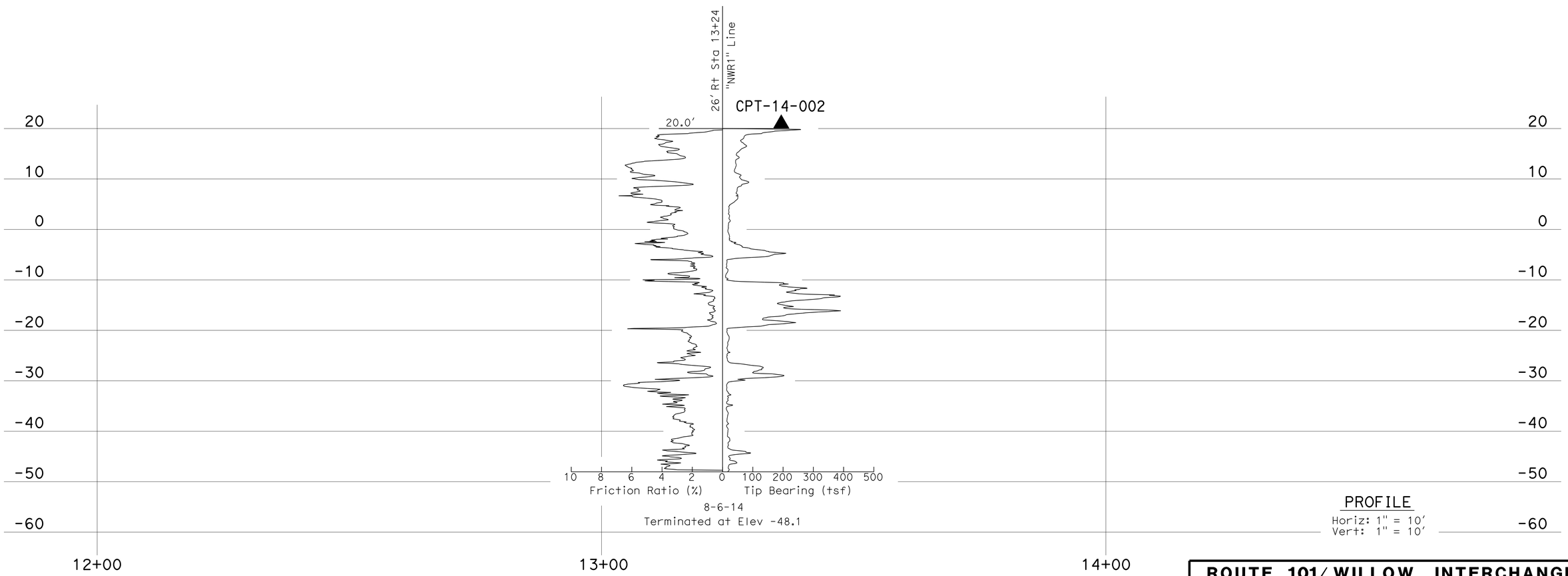

PROFILE
Horiz: 1" = 10'
Vert: 1" = 10'

ENGINEERING SERVICES	MATERIALS AND GEOTECHNICAL SERVICES	STATE OF CALIFORNIA DEPARTMENT OF TRANSPORTATION	DIVISION OF ENGINEERING SERVICES STRUCTURE DESIGN DESIGN BRANCH 4	BRIDGE NO. 35E0050 POST MILE	ROUTE 101/ WILLOW INTERCHANGE SOUND WALL 3 LOG OF TEST BORINGS
FUNCTIONAL SUPERVISOR NAME: C. Risden	DRAWN BY: I. G-Remmen CHECKED BY: D. Nesbitt	FIELD INVESTIGATION BY: M. Gaffney, R. Nashed			

OGS CIVIL LOG OF TEST BORINGS SHEET

ORIGINAL SCALE IN INCHES FOR REDUCED PLANS 0 1 2 3

UNIT: 59-3579
PROJECT NUMBER & PHASE: 04000006804
CONTRACT NO.: 04-235654

DISREGARD PRINTS BEARING EARLIER REVISION DATES → 09-01-15 10-19-15

SHEET 11 OF 11

FILE => 35e0050-z-1tb01.dgn

USERNAME => s132775 DATE PLOTTED => 17-AUG-2016 TIME PLOTTED => 11:32

DIST	COUNTY	ROUTE	POST MILES TOTAL PROJECT	SHEET No.	TOTAL SHEETS
04	SM	101,114	1.3/2.5, 5.0/5.3	535	568

REGISTERED CIVIL ENGINEER 11-10-15 DATE

6-29-16
PLANS APPROVAL DATE

REGISTERED PROFESSIONAL ENGINEER LINAN WANG No. 54714 Exp. 12-31-17 CIVIL STATE OF CALIFORNIA

The State of California or its officers or agents shall not be responsible for the accuracy or completeness of scanned copies of this plan sheet.

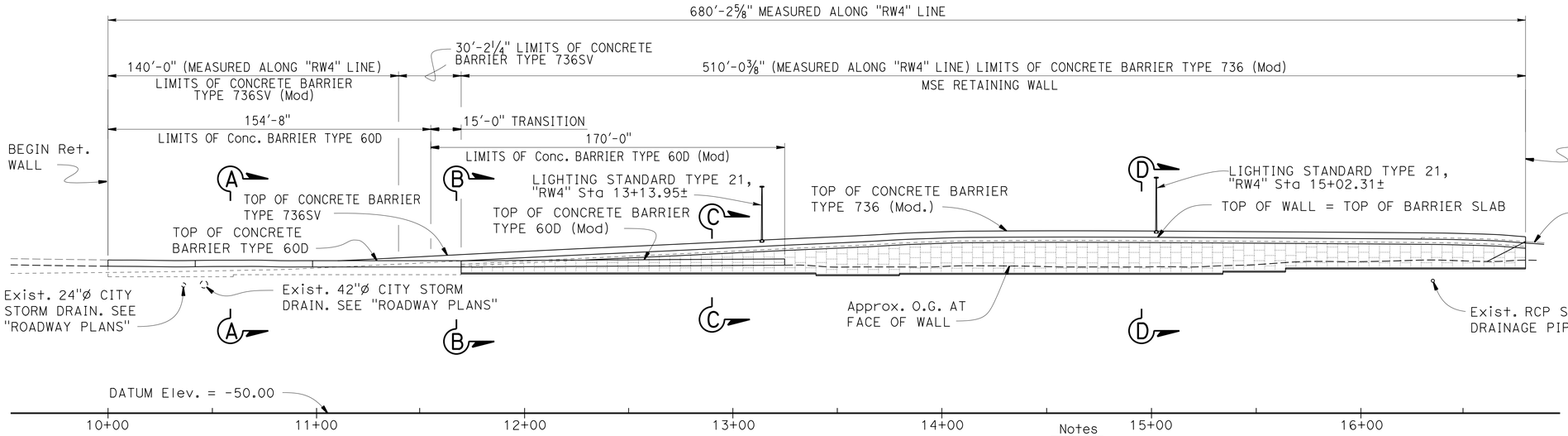

DEVELOPED ELEVATION

1" = 30'

Notes

1. For "SECTION A-A", "SECTION B-B", SECTION C-C", "SECTION D-D" and details and dimensions not shown, see "GENERAL PLAN NO. 2" sheet.
2. For Lighting Standard Type 21, see "ROADWAY PLANS".

UTILITIES LEGEND

Ⓐ - Existing 8"Ø PG&E Pipe. See "ROADWAY PLANS"
Ⓑ - Existing 8"Ø Water line. See "ROADWAY PLANS"
Ⓒ - Existing Overhead 4.16 kV Electrical Line. See "ROADWAY PLANS"
Ⓓ - Existing Overhead Fiber Optic Line. See "ROADWAY PLANS"

QUANTITIES

MECHANICALLY STABILIZED EMBANKMENT, LOCATION C	6,271	SQFT
STRUCTURAL CONCRETE, BARRIER SLAB	260	CY
CONCRETE BARRIER (TYPE 60D)	155	LF
CONCRETE BARRIER (TYPE 60D MODIFIED)	170	LF
CONCRETE BARRIER (TYPE 736 MODIFIED)	511	LF
CONCRETE BARRIER (TYPE 736SV)	31	LF
CONCRETE BARRIER (TYPE 736SV MODIFIED)	140	LF

INDEX TO PLANS

SHT NO.	TITLE
1.	GENERAL PLAN NO. 1
2.	GENERAL PLAN NO. 2
3.	STRUCTURE PLAN NO. 1
4.	STRUCTURE PLAN NO. 2
5.	STRUCTURE PLAN NO. 3
6.	STRUCTURE PLAN NO. 4
7.	FOUNDATION PLAN
8.	MISCELLANEOUS DETAILS
9.	CONCRETE BARRIER SLAB DETAILS
10.	UNDERDRAIN DETAILS
11.	MECHANICALLY STABILIZED EMBANKMENT DETAILS NO. 1
12.	MECHANICALLY STABILIZED EMBANKMENT DETAILS NO. 2
13.	MECHANICALLY STABILIZED EMBANKMENT DETAILS NO. 3
14.	MECHANICALLY STABILIZED EMBANKMENT DETAILS NO. 4
15.	ARCHITECTURAL DETAILS NO. 1
16.	ARCHITECTURAL DETAILS NO. 2
17.	ARCHITECTURAL DETAILS NO. 3
18.	ARCHITECTURAL DETAILS NO. 4
19.	LOG OF TEST BORINGS

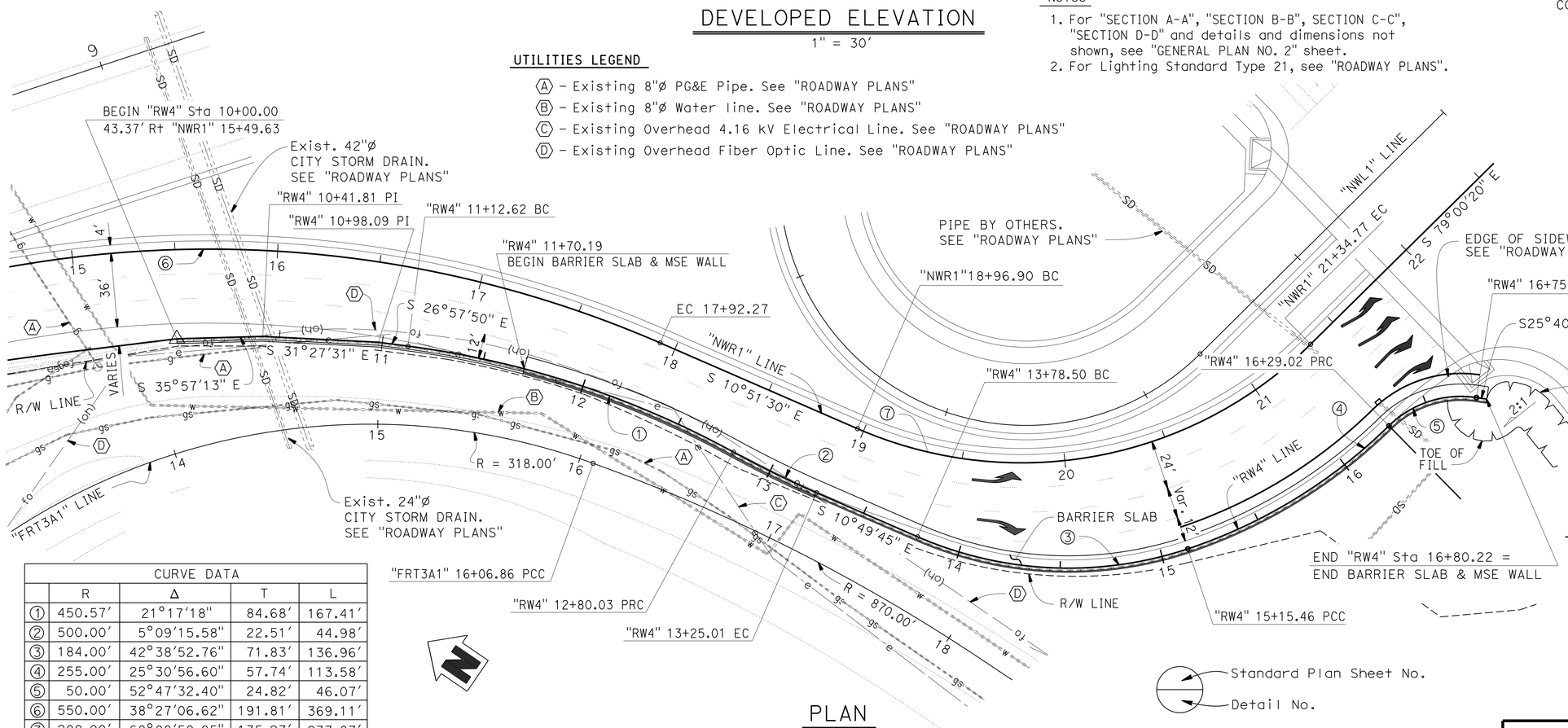

CURVE DATA				
	R	Δ	T	L
①	450.57'	21°17'18"	84.68'	167.41'
②	500.00'	5°09'15.58"	22.51'	44.98'
③	184.00'	42°38'52.76"	71.83'	136.96'
④	255.00'	25°30'56.60"	57.74'	113.58'
⑤	50.00'	52°47'32.40"	24.82'	46.07'
⑥	550.00'	38°27'06.62"	191.81'	369.11'
⑦	200.00'	68°08'50.05"	135.27'	237.87'

PLAN

1" = 30'

Standard Plan Sheet No.
Detail No.

STANDARD PLANS DATED 2010

SHT NO.	TITLE
A10A	ABBREVIATIONS (SHEET 1 OF 2)
RSP A10B	ABBREVIATIONS (SHEET 2 OF 2)
RSP A10F	LEGEND - SOIL (SHEET 1 OF 2)
RSP A10G	LEGEND - SOIL (SHEET 2 OF 2)
RSP A76A	CONCRETE BARRIER TYPE 60
B2-5	PILE DETAILS CLASS 90 AND CLASS 140
RSP B11-56	CONCRETE BARRIER TYPE 736
RSP B15-6	SOUND WALL MASONRY BLOCK ON TYPE 736S/ SV BARRIER DETAILS (1)
RSP ES-6A	ELECTRICAL SYSTEMS (LIGHTING STANDARD, TYPE 15 AND 21)

ROUTE 101/ WILLOW INTERCHANGE
RETAINING WALL 4
GENERAL PLAN NO. 1

Minh Ha
DESIGN ENGINEER

	BY	CHECKED
DESIGN	Rafael Salazar	Peter Soin
DETAILS	Jeff Thorne / W Zhang	Peter Soin
QUANTITIES	Rafael Salazar	Linan Wang

LOAD & RESISTANCE FACTOR DESIGN — LIVE LOADING: HL93 W/"LOW-BOY"; PERMIT DESIGN VEHICLE

	BY	CHECKED
LAYOUT	Linan Wang	Peter Soin
SPECIFICATIONS	Sirisha Nelapatia	PLANS AND SPECS COMPARED Linan Wang

STATE OF CALIFORNIA
DEPARTMENT OF TRANSPORTATION

DIVISION OF ENGINEERING SERVICES
STRUCTURE DESIGN
DESIGN BRANCH 4

BRIDGE NO. 35E0051
POST MILE 1.84-1.97

ORIGINAL SCALE IN INCHES FOR REDUCED PLANS 0 1 2 3

UNIT: 59-3579
PROJECT NUMBER & PHASE: 04000006804
CONTRACT NO.: 04-235654

DISREGARD PRINTS BEARING EARLIER REVISION DATES

REVISION DATES: 11-16-15 1-11-16 2-16-16 10-15-16

SHEET 1 OF 19

STRUCTURES DESIGN GENERAL PLAN SHEET (ENGLISH) (REV.09-01-10)

FILE => 35e0051-a-gp01-ext.dgn

USERNAME => s132175 DATE PLOTTED => 17-AUG-2016 TIME PLOTTED => 11:32

DIST	COUNTY	ROUTE	POST MILES TOTAL PROJECT	SHEET No.	TOTAL SHEETS
04	SM	101,114	1.3/2.5, 5.0/5.3	536	568

REGISTERED CIVIL ENGINEER 11-10-15 DATE

6-29-16
PLANS APPROVAL DATE

REGISTERED PROFESSIONAL ENGINEER LINAN WANG No. 54714 Exp. 12-31-17 CIVIL STATE OF CALIFORNIA

The State of California or its officers or agents shall not be responsible for the accuracy or completeness of scanned copies of this plan sheet.

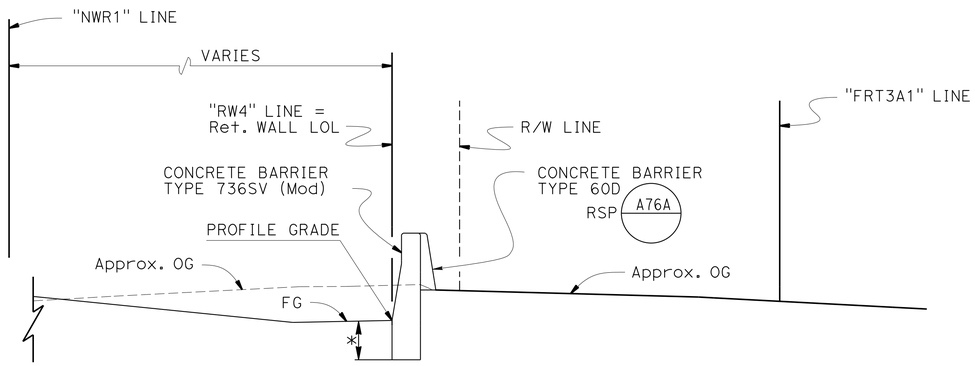

SECTION A-A

1/4"=1'-0"

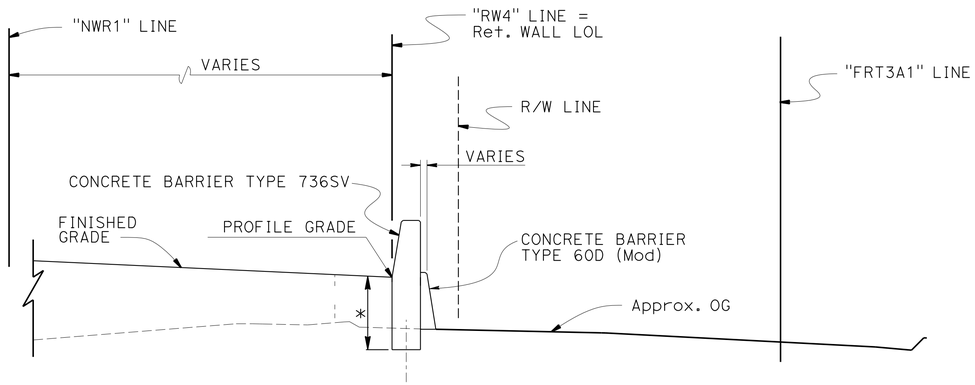

SECTION B-B

1/4"=1'-0"

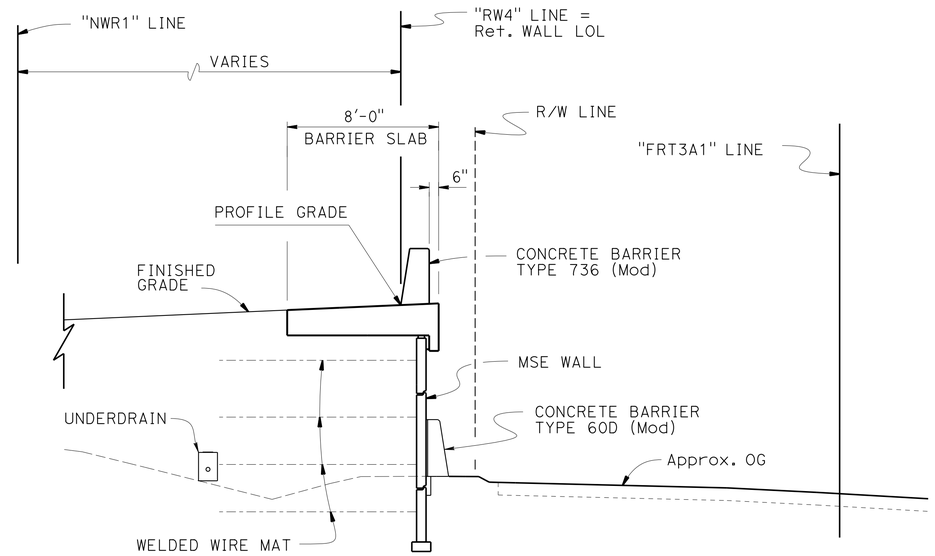

SECTION C-C

1/4"=1'-0"

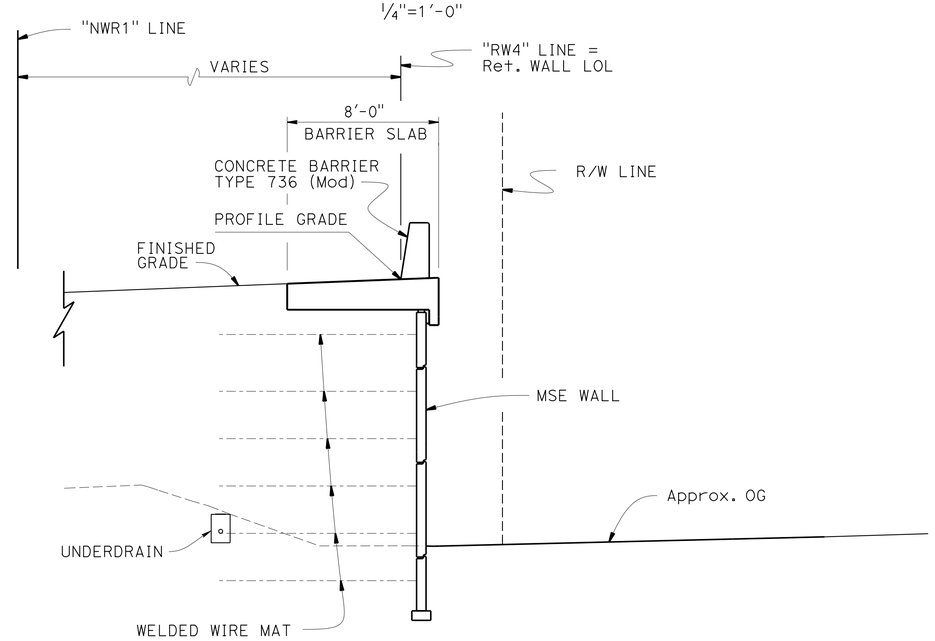

SECTION D-D

1/4"=1'-0"

NOTES

1. For Profile Grade, see "ROADWAY PLANS".
2. For CDSM (Cement Deep Soil Mixing) Limits, see "ROADWAY PLANS".

* Design "H_e"

Minh Ha DESIGN ENGINEER	DESIGN	BY Rafael Salazar	CHECKED Peter Soin	LOAD & RESISTANCE FACTOR DESIGN	LIVE LOADING: HL93 W/"LOW-BOY": PERMIT DESIGN VEHICLE	
	DETAILS	BY Jeff Thorne / W. Zhang	CHECKED Peter Soin	LAYOUT	BY Linan Wang	CHECKED Peter Soin
	QUANTITIES	BY Rafael Salazar	CHECKED Linan Wang	SPECIFICATIONS	BY Sirisha Nelapatia	PLANS AND SPECS COMPARED Linan Wang

ORIGINAL SCALE IN INCHES FOR REDUCED PLANS 0 1 2 3

STATE OF CALIFORNIA
DEPARTMENT OF TRANSPORTATION

DIVISION OF ENGINEERING SERVICES
STRUCTURE DESIGN
DESIGN BRANCH 4

BRIDGE NO. 35E0051
POST MILE 1.84-1.97

ROUTE 101/ WILLOW INTERCHANGE
RETAINING WALL 4
GENERAL PLAN NO. 2

UNIT: 59-3579
PROJECT NUMBER & PHASE: 04000006804
CONTRACT NO.: 04-235654

DISREGARD PRINTS BEARING EARLIER REVISION DATES → REVISION DATES 11-05-15 10-23-15 11-16-15

SHEET 2 OF 19

USERNAME => s132175 DATE PLOTTED => 17-AUG-2016 TIME PLOTTED => 11:32

STRUCTURES DESIGN GENERAL PLAN SHEET (ENGLISH) (REV.09-01-10)

FILE => 35e0051-a-gp02.dgn

DIST	COUNTY	ROUTE	POST MILES TOTAL PROJECT	SHEET No.	TOTAL SHEETS
04	SM	101,114	1.3/2.5, 5.0/5.3	537	568

REGISTERED CIVIL ENGINEER 11-10-15 DATE

6-29-16
PLANS APPROVAL DATE

REGISTERED PROFESSIONAL ENGINEER LINAN WANG No. 54714 Exp. 12-31-17 CIVIL STATE OF CALIFORNIA

The State of California or its officers or agents shall not be responsible for the accuracy or completeness of scanned copies of this plan sheet.

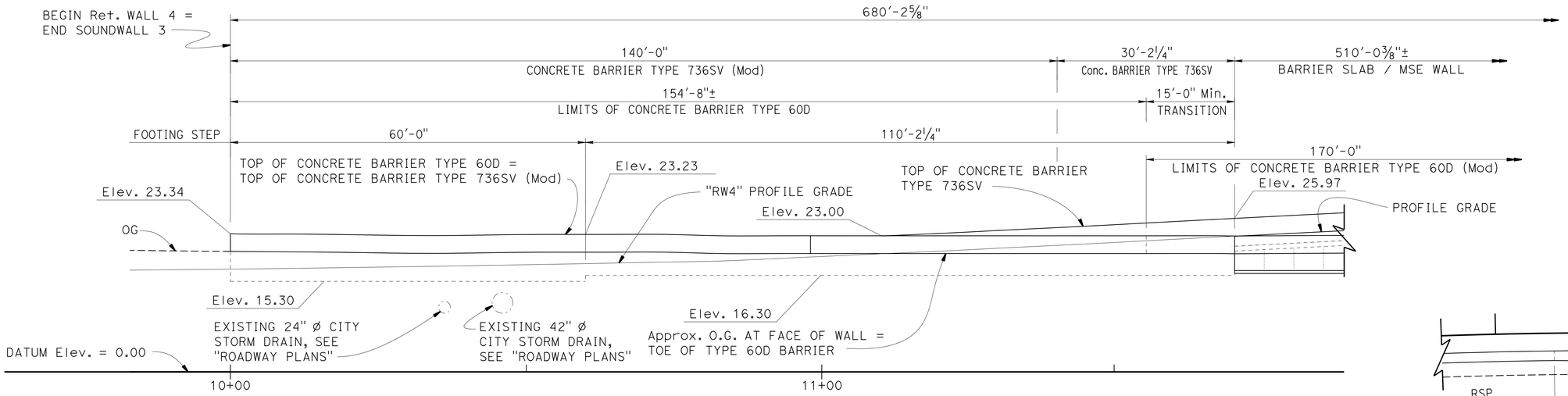

DEVELOPED PART ELEVATION

1" = 10'

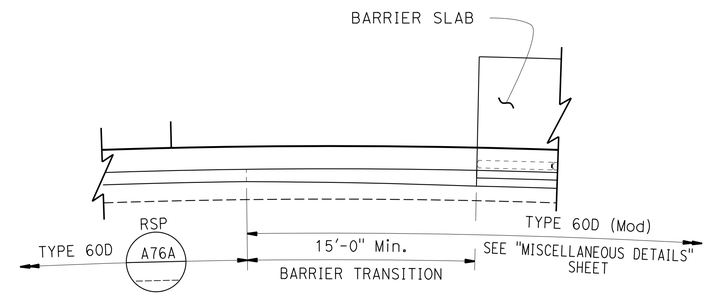

BARRIER TRANSITION

1" = 5'

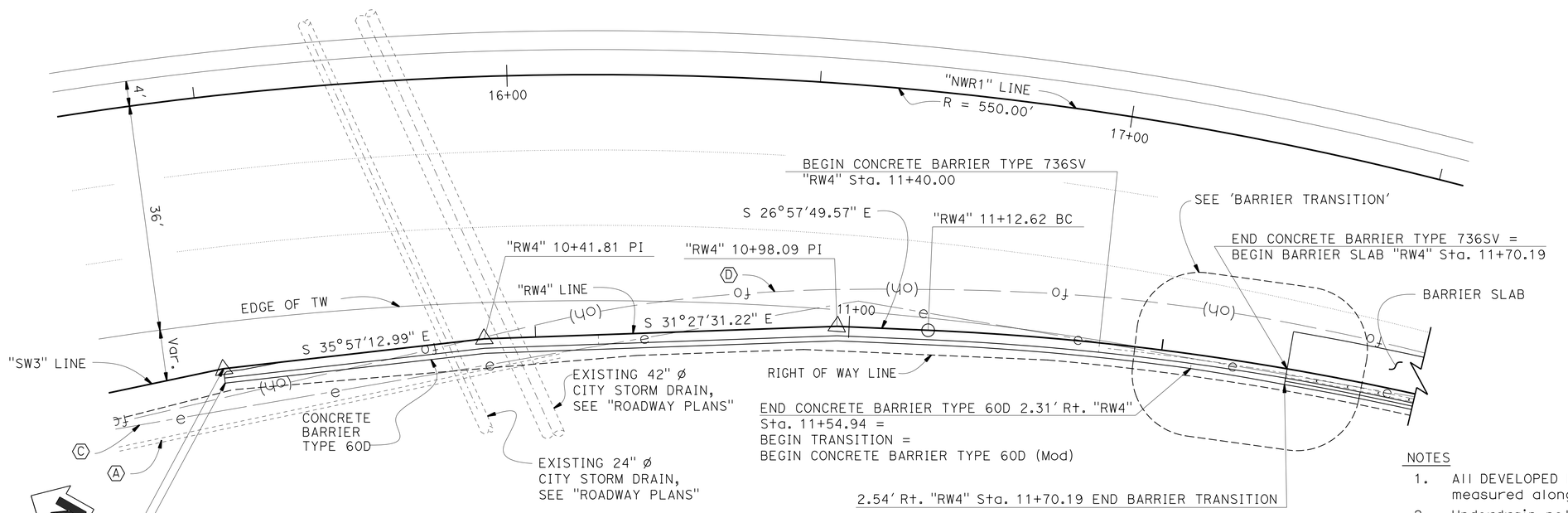

PART PLAN

1" = 10'

UTILITIES LEGEND

- Ⓐ - Existing 8"ø PG&E Pipe. See "ROADWAY PLANS"
- Ⓑ - Existing 8"ø Water line. See "ROADWAY PLANS"
- Ⓒ - Existing Overhead 4.16 kV Electrical Line
- Ⓓ - Existing Overhead Fiber Optic Line. See "ROADWAY PLANS"

NOTES

1. All DEVELOPED PART ELEVATION view dimensions are measured along "RW4" Line unless otherwise noted.
2. Underdrain not shown, see "UNDERDRAIN DETAILS" sheet for details.
3. Verify the locations and elevations of all exist utility pipes before construction.
4. For profile grade, see "ROADWAY PLANS".

ROUTE 101/ WILLOW INTERCHANGE
RETAINING WALL 4
STRUCTURE PLAN NO. 1

DESIGN	BY Rafael Salazar	CHECKED Peter Soin	
DETAILS	BY Jeff Thorne / W. Zhang	CHECKED Peter Soin	
QUANTITIES	BY Rafael Salazar	CHECKED Linan Wang	

STATE OF CALIFORNIA
DEPARTMENT OF TRANSPORTATION

DIVISION OF ENGINEERING SERVICES
STRUCTURE DESIGN
DESIGN BRANCH 4

BRIDGE NO. 35E0051
POST MILE 1.84-1.97

STRUCTURES DESIGN DETAIL SHEET (ENGLISH) (REV. 09-01-10)

ORIGINAL SCALE IN INCHES FOR REDUCED PLANS 0 1 2 3

UNIT: 59-3579
PROJECT NUMBER & PHASE: 04000006804
CONTRACT NO.: 04-235654

DISREGARD PRINTS BEARING EARLIER REVISION DATES

REVISION DATES: 1-14-16 2-16-16 10-23-15 11-10-15

SHEET 3 OF 19

FILE => 35e0051-c-sp01.dgn

USERNAME => s132775 DATE PLOTTED => 17-AUG-2016 TIME PLOTTED => 11:32

DIST	COUNTY	ROUTE	POST MILES TOTAL PROJECT	SHEET No.	TOTAL SHEETS
04	SM	101,114	1.3/2.5, 5.0/5.3	538	568

REGISTERED CIVIL ENGINEER 11-10-15 DATE

6-29-16
PLANS APPROVAL DATE

REGISTERED PROFESSIONAL ENGINEER LINAN WANG No. 54714 Exp. 12-31-17 CIVIL STATE OF CALIFORNIA

The State of California or its officers or agents shall not be responsible for the accuracy or completeness of scanned copies of this plan sheet.

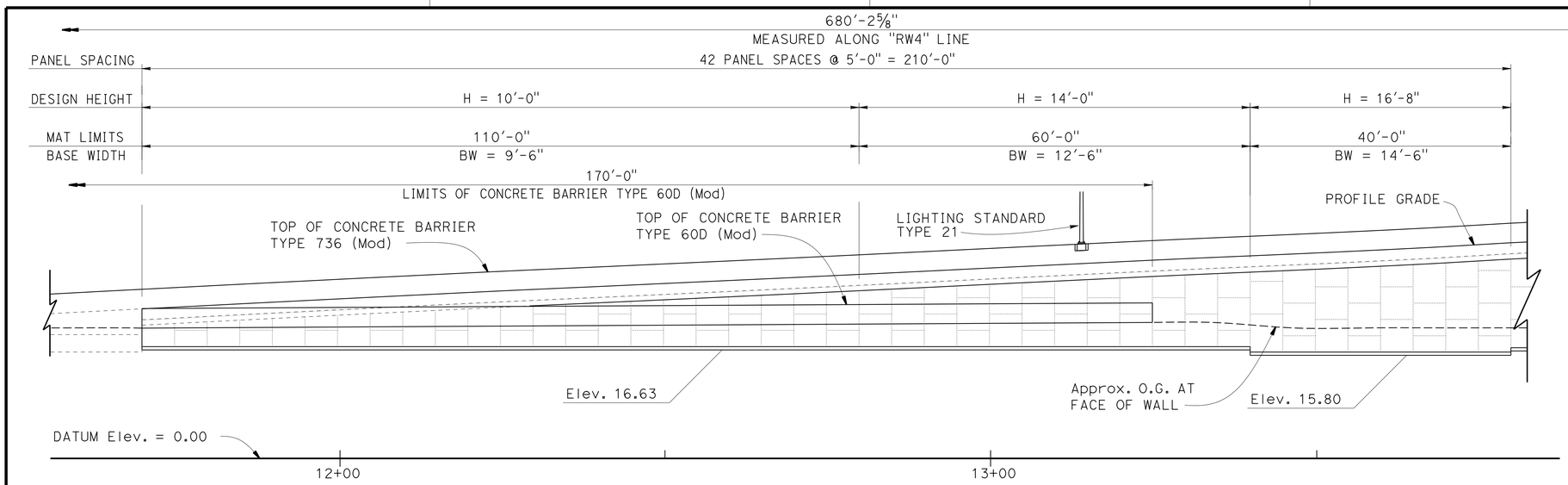

DEVELOPED PART ELEVATION

1" = 10'

NOTES

1. All DEVELOPED PART ELEVATION view dimensions are measured along "RW4" Line unless otherwise noted.
2. Underdrain not shown, see "UNDERDRAIN DETAILS" sheet for details.
3. For Lighting Standard Type 21, see "ROADWAY PLANS".
4. Verify the locations and elevations of all exist utility pipes before construction.
5. For profile grade, see "ROADWAY PLANS".

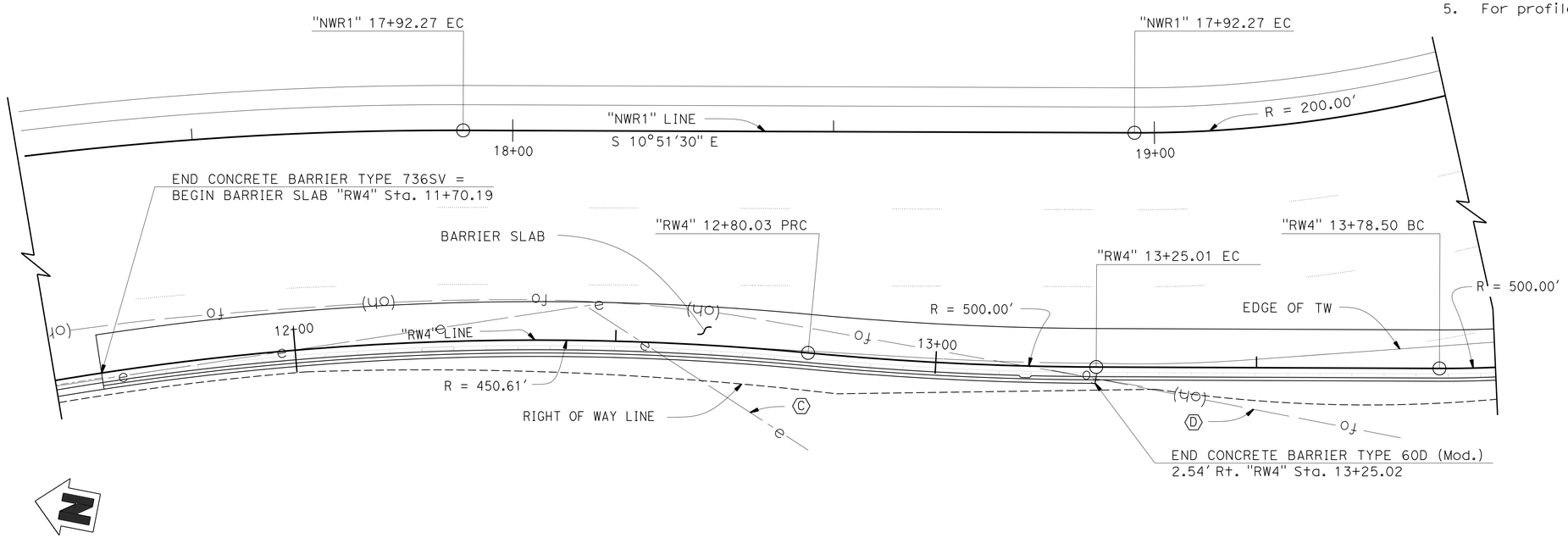

PART PLAN

1" = 10'

	BY	CHECKED
DESIGN	Rafael Salazar	Peter Soin
DETAILS	Jeff Thorne	Peter Soin
QUANTITIES	Rafael Salazar	Linan Wang

STATE OF CALIFORNIA
DEPARTMENT OF TRANSPORTATION

DIVISION OF ENGINEERING SERVICES
STRUCTURE DESIGN
DESIGN BRANCH 4

BRIDGE NO. 35E0051
POST MILE 1.84-1.97

ROUTE 101/ WILLOW INTERCHANGE
RETAINING WALL 4
STRUCTURE PLAN NO. 2

STRUCTURES DESIGN DETAIL SHEET (ENGLISH) (REV. 09-01-10)

ORIGINAL SCALE IN INCHES FOR REDUCED PLANS 0 1 2 3

UNIT: 59-3579
PROJECT NUMBER & PHASE: 04000006804
CONTRACT NO.: 04-235654

DISREGARD PRINTS BEARING EARLIER REVISION DATES

REVISION DATES 1-8-16 11-18-15 10-28-15 11-20-15

SHEET 4 OF 19

FILE => 35e0051-c-sp02.dgn

USERNAME => s132175 DATE PLOTTED => 17-AUG-2016 TIME PLOTTED => 11:32

DIST	COUNTY	ROUTE	POST MILES TOTAL PROJECT	SHEET No.	TOTAL SHEETS
04	SM	101,114	1.3/2.5, 5.0/5.3	539	568

REGISTERED CIVIL ENGINEER 11-10-15 DATE

6-29-16
PLANS APPROVAL DATE

REGISTERED PROFESSIONAL ENGINEER
LINAN WANG
No. 54714
Exp. 12-31-17
CIVIL
STATE OF CALIFORNIA

The State of California or its officers or agents shall not be responsible for the accuracy or completeness of scanned copies of this plan sheet.

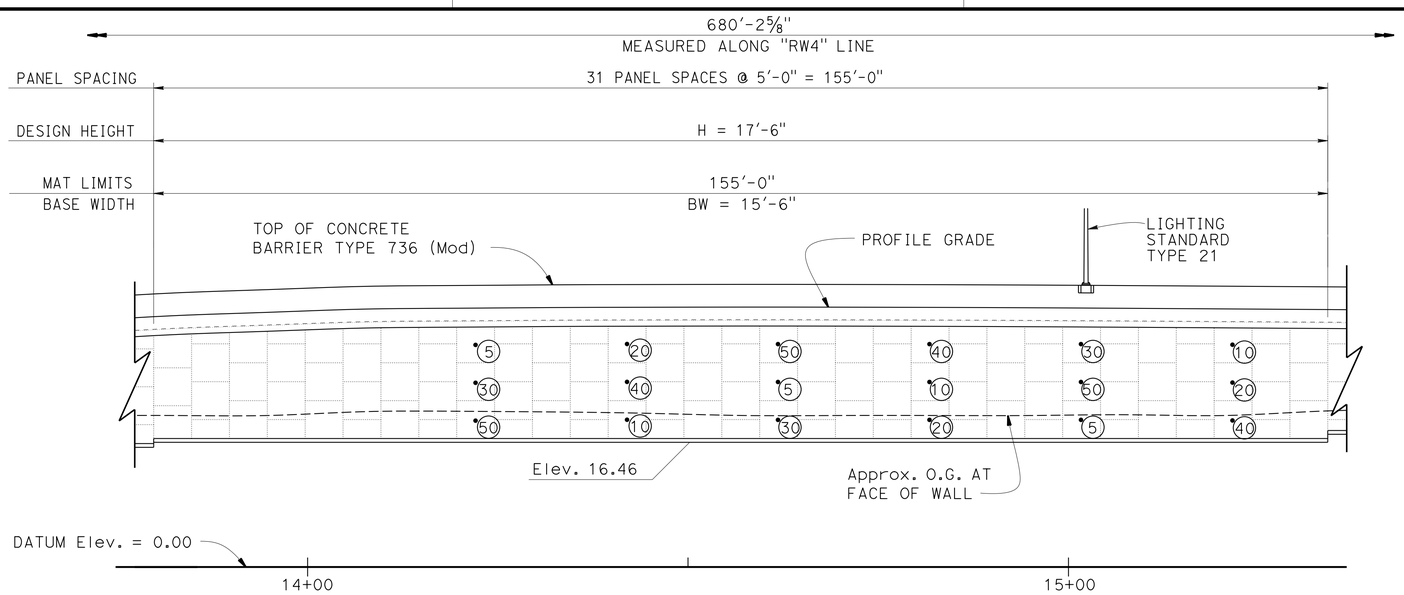

DEVELOPED PART ELEVATION

1" = 10'

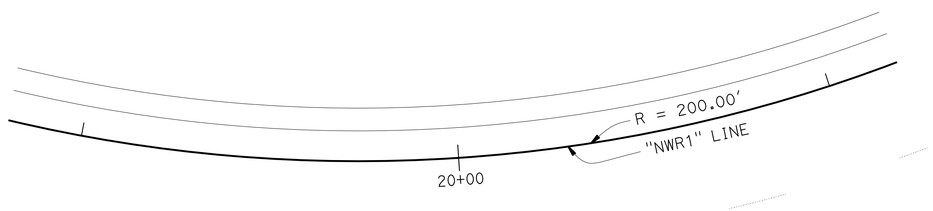

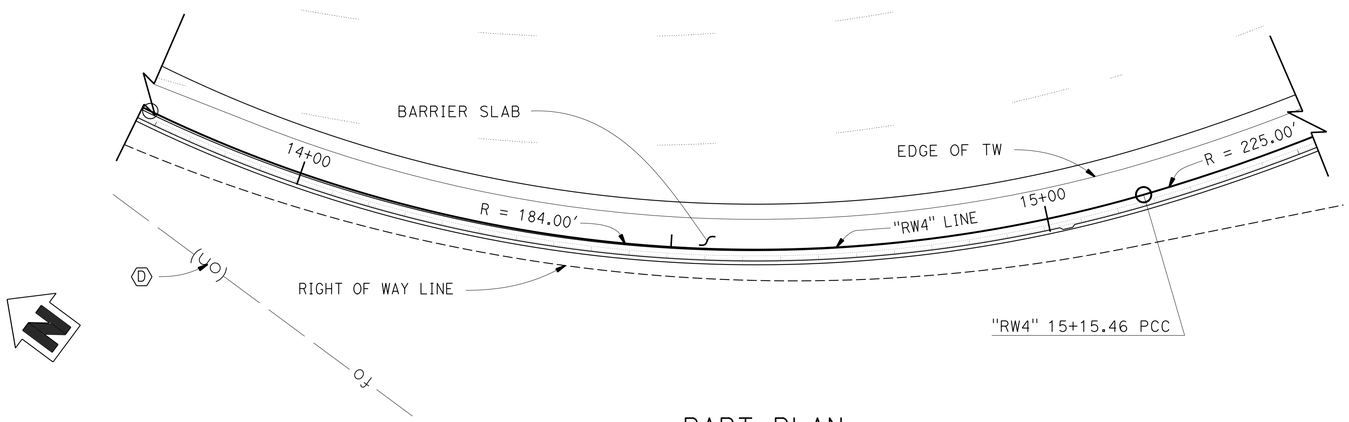

PART PLAN

1" = 10'

Indicates interval in years from time of construction to time of removal of inspection wire

5

Location of inspection wire

PANEL LEGEND

No Scale

STEEL SOIL REINFORCEMENT FOR CASE LOAD 1

DESIGN HIGHT (H)	10'-0"	14'-0"	14'-2"	16'-8"	17'-6"
BASE WIDTH (L)	9'-6"	12'-6"	13'-0"	14'-6"	15'-6"
	Top 4-W15xW15@6	Top 4-W15xW15@6	Top 4-W15xW15@6	Top 4-W15xW15@6	Top 4-W15xW15@6
	2 of 4-W15xW15@6	3 of 4-W15xW15@6	3 of 4-W15xW15@6	4 of 4-W15xW15@6	4 of 4-W15xW15@6
	Bot. 4-W20xW15@9	1 of 4-W20xW15@9	1 of 4-W20xW15@9	1 of 4-W20xW15@9	1 of 4-W20xW15@9
		Bot. 4-W20xW15@9	Bot. 4-W20xW15@9	Bot. 4-W20xW15@9	Bot. 4-W20xW15@9

NOTES

1. All DEVELOPED PART ELEVATION view dimensions are measured along "RW4" Line unless otherwise noted.
2. Underdrain not shown, see "UNDERDRAIN DETAILS" sheet for details.
3. For Lighting Standard Type 21, see "ROADWAY PLANS".
4. For profile grade, see "ROADWAY PLANS".

ROUTE 101/ WILLOW INTERCHANGE
RETAINING WALL 4
STRUCTURE PLAN NO. 3

	BY	CHECKED
DESIGN	Rafael Salazar	Peter Soin
DETAILS	Jeff Thorne/ W Zhang	Peter Soin
QUANTITIES	Rafael Salazar	Linan Wang

STATE OF CALIFORNIA
DEPARTMENT OF TRANSPORTATION

DIVISION OF ENGINEERING SERVICES
STRUCTURE DESIGN
DESIGN BRANCH 4

BRIDGE NO. 35E0051
POST MILE 1.84-1.97

STRUCTURES DESIGN DETAIL SHEET (ENGLISH) (REV. 09-01-10)

ORIGINAL SCALE IN INCHES FOR REDUCED PLANS 0 1 2 3

UNIT: 59-3579
PROJECT NUMBER & PHASE: 04000006804
CONTRACT NO.: 04-235654

DISREGARD PRINTS BEARING EARLIER REVISION DATES

REVISION DATES 1-8-16 11-05-15 10-23-15 11-30-15

SHEET 5 OF 19

FILE => 35e0051-c-sp03.dgn

USERNAME => s132175 DATE PLOTTED => 17-AUG-2016 TIME PLOTTED => 11:32

DIST	COUNTY	ROUTE	POST MILES TOTAL PROJECT	SHEET No.	TOTAL SHEETS
04	SM	101,114	1.3/2.5, 5.0/5.3	540	568

REGISTERED CIVIL ENGINEER 11-10-15 DATE

6-29-16
PLANS APPROVAL DATE

REGISTERED PROFESSIONAL ENGINEER
LINAN WANG
No. 54714
Exp. 12-31-17
CIVIL
STATE OF CALIFORNIA

The State of California or its officers or agents shall not be responsible for the accuracy or completeness of scanned copies of this plan sheet.

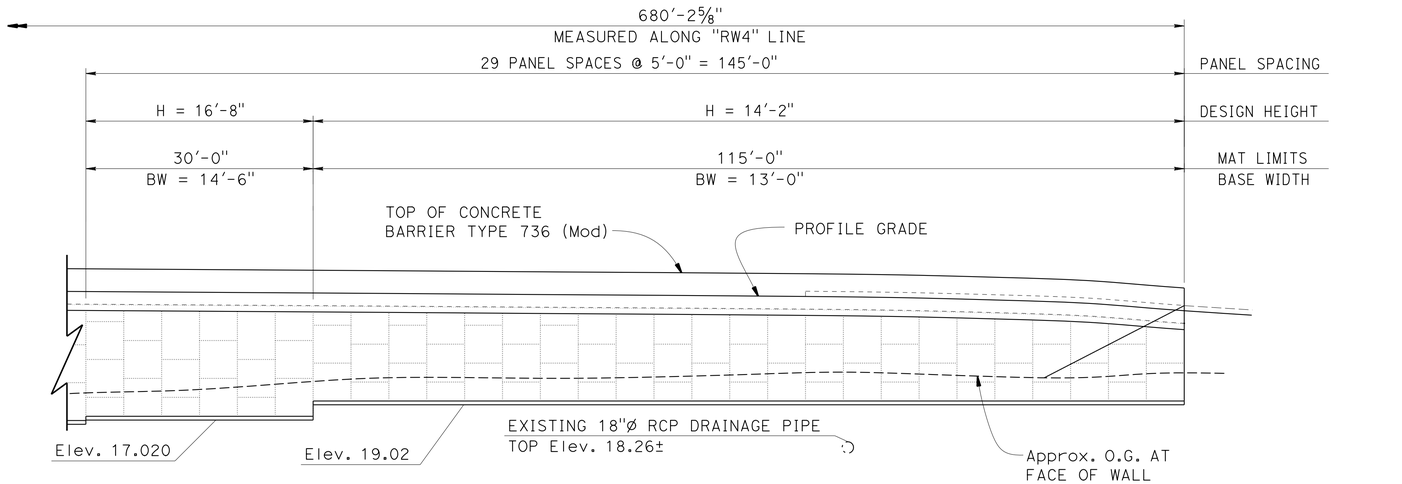

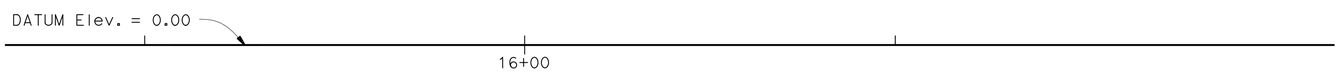

DEVELOPED PART ELEVATION

1" = 10'

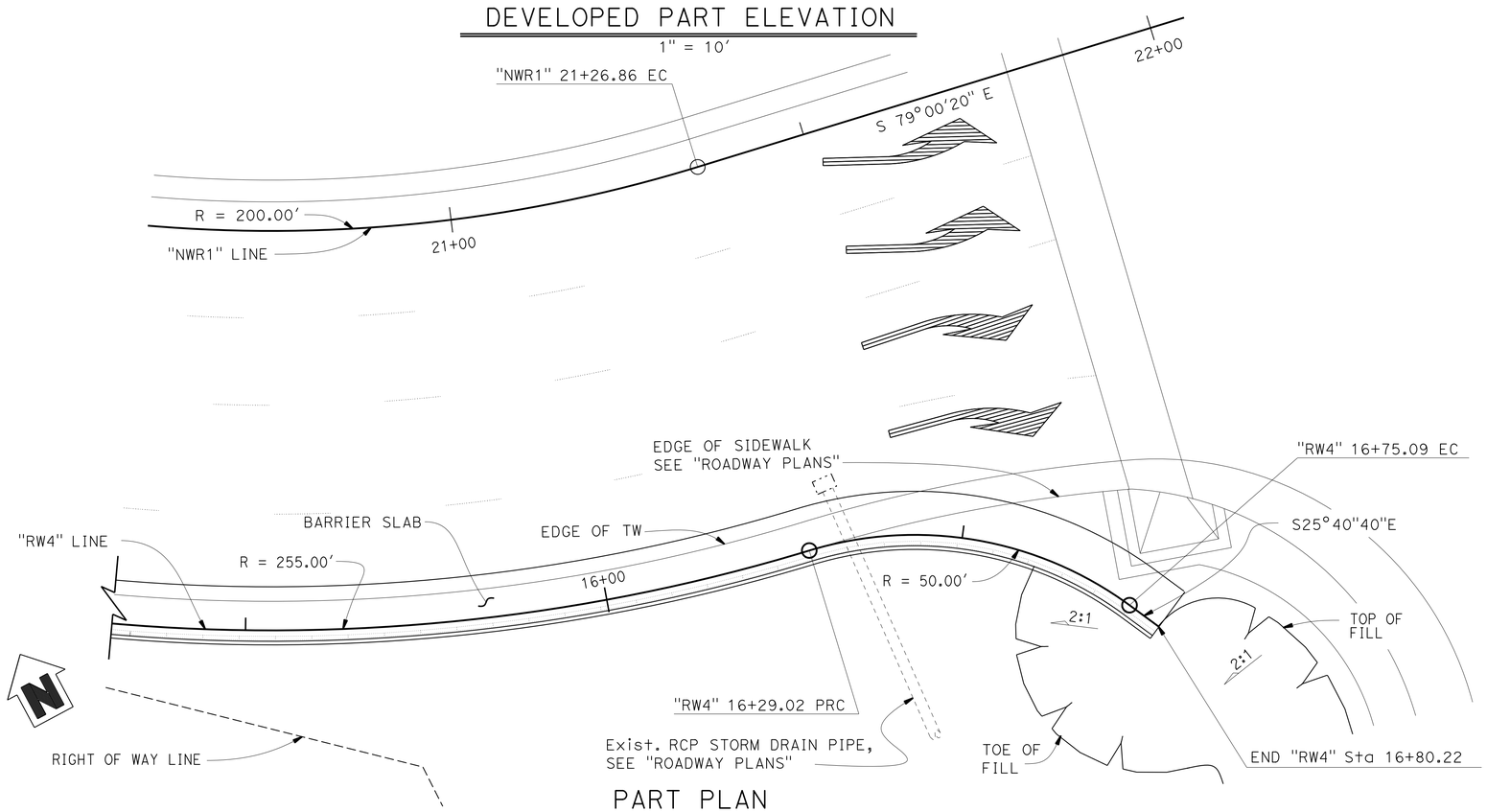

PART PLAN

1" = 10'

NOTES

1. All DEVELOPED PART ELEVATION view dimensions are measured along "RW4" Line unless otherwise noted.
2. Underdrain not shown, see "UNDERDRAIN DETAILS" sheet for details.
3. Verify the locations and elevations of all exist utility pipes before construction.
4. For profile grade, see "ROADWAY PLANS".

	BY	CHECKED
DESIGN	Rafael Salazar	Linan Wang
DETAILS	Jeff Thorne / W. Zhang	Peter Soin
QUANTITIES	Rafael Salazar	Linan Wang

STATE OF CALIFORNIA
DEPARTMENT OF TRANSPORTATION

DIVISION OF ENGINEERING SERVICES
STRUCTURE DESIGN
DESIGN BRANCH 4

BRIDGE NO. 35E0051
POST MILE 1.75-1.82

ROUTE 101/WILLOW INTERCHANGE
RETAINING WALL 4
STRUCTURE PLAN NO. 4

STRUCTURES DESIGN DETAIL SHEET (ENGLISH) (REV. 09-01-10)

ORIGINAL SCALE IN INCHES FOR REDUCED PLANS 0 1 2 3

UNIT: 59-3579
PROJECT NUMBER & PHASE: 04000006804
CONTRACT NO.: 04-235654

DISREGARD PRINTS BEARING EARLIER REVISION DATES

REVISION DATES: 1-8-16 10-27-15 10-15-15 11-20-15

SHEET 6 OF 19

FILE => 35e0051-c-sp04.dgn

USERNAME => s132175 DATE PLOTTED => 17-AUG-2016 TIME PLOTTED => 11:32

DIST	COUNTY	ROUTE	POST MILES TOTAL PROJECT	SHEET No.	TOTAL SHEETS
04	SM	101,114	1.3/2.5, 5.0/5.3	541	568

REGISTERED CIVIL ENGINEER 11-10-15 DATE

6-29-16
PLANS APPROVAL DATE

REGISTERED PROFESSIONAL ENGINEER LINAN WANG No. 54714 Exp 12-31-17 CIVIL STATE OF CALIFORNIA

The State of California or its officers or agents shall not be responsible for the accuracy or completeness of electronic copies of this plan sheet.

CURVE DATA

No.	R	Δ	T	L
4	550.00	38°27'07"	191.81	369.11
5	200.00	68°08'50"	135.27	237.87
8	318.00	75°12'54"	244.96	417.45
9	870.00	13°50'48"	105.64	210.25
10	450.61	21°17'19"	84.69	167.42
11	500.00	05°09'15"	22.50	44.98
12	184.00	41°54'26"	70.46	134.58
13	255.00	26°05'11"	58.60	115.63
14	50.00	53°08'41"	25.01	46.38
15	120.00	102°37'43"	149.86	214.94
16	120.00	102°37'43"	149.86	214.95

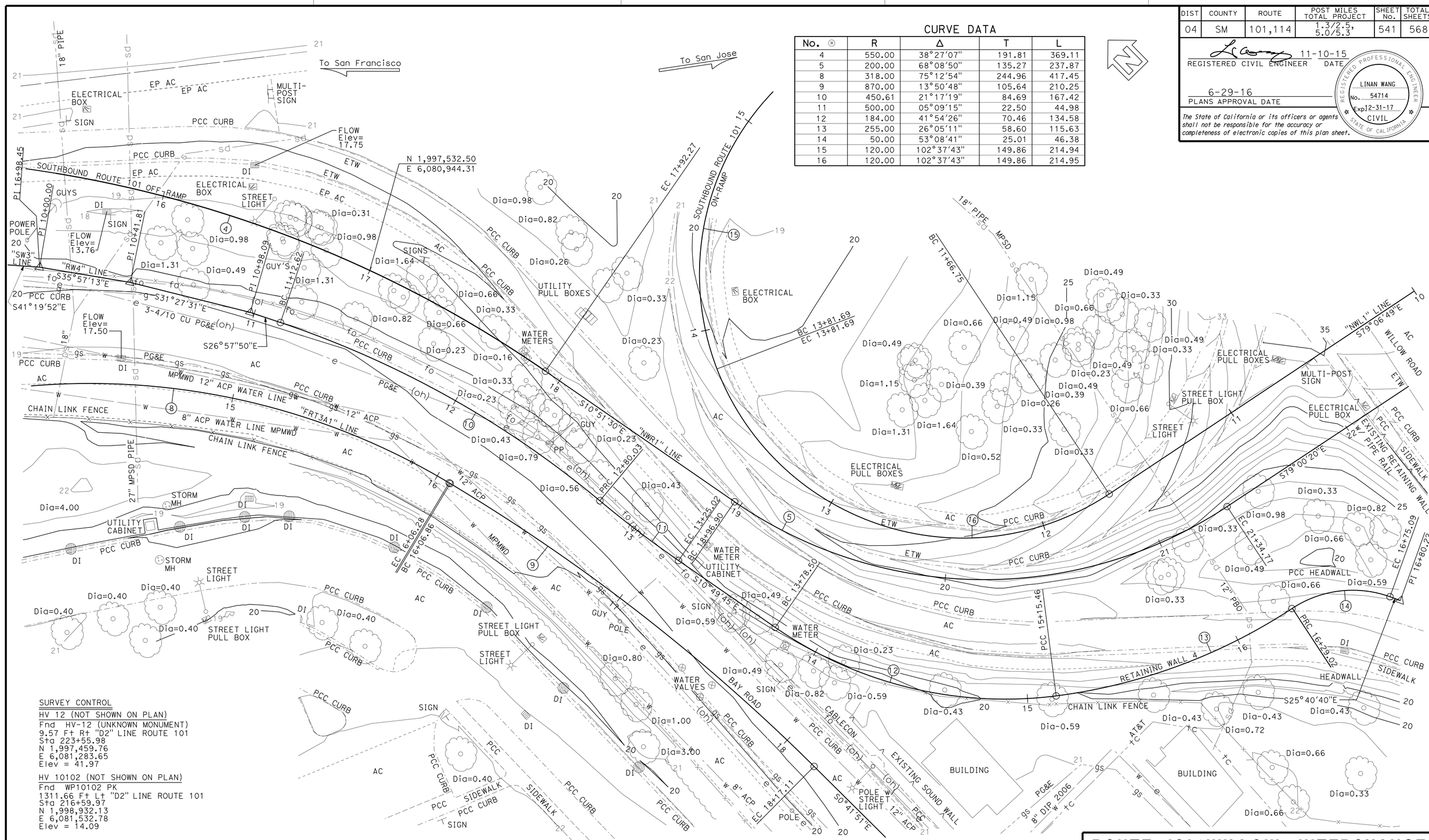

ROUTE 101/ WILLOW INTERCHANGE

RETAINING WALL 4

FOUNDATION PLAN

PRELIMINARY INVESTIGATION SECTION

SCALE	VERT.DATUM NGVD29	PHOTOGRAMMETRY AS OF: X			
1"=20'	HORZ.DATUM NAD83 (1991.35)	SURVEYED	BY DISTRICT	CHECKED	BY C. FASSETT 01/2015
ALIGNMENT TIES Dist TRAVERSE SHEET		DRAFTED	BY T. ZOLNIKOV 01/2015	CHECKED	BY L. LEW 01/2015

	BY	CHECKED
DESIGN	Rafael Salazar	Linan Wang
DETAILS	Jeff Thorne	Peter Soin
QUANTITIES	Rafael Salazar	Linan Wang

STATE OF CALIFORNIA DEPARTMENT OF TRANSPORTATION

DIVISION OF ENGINEERING SERVICES STRUCTURE DESIGN DESIGN BRANCH 4

BRIDGE NO. 35E0051
POST MILE 1.75-1.82

STRUCTURES FOUNDATION PLAN SHEET (ENGLISH) (REV. 09-01-10)

ORIGINAL SCALE IN INCHES FOR REDUCED PLANS 0 1 2 3

UNIT: 3646
PROJECT NUMBER & PHASE: 0400000680 4 CONTRACT NO.: 04-235654

SUBMITTAL DATE	REVISION DATES				SHEET	OF
04/20/15	11/10/15	1-8-16			7	19

FILE => 35e0051-e-fp101.dgn

USERNAME => s132775 DATE PLOTTED => 17-AUG-2016 TIME PLOTTED => 11:32

DIST	COUNTY	ROUTE	POST MILES TOTAL PROJECT	SHEET No.	TOTAL SHEETS
04	SM	101,114	1.3/2.5, 5.0/5.3	542	568

REGISTERED CIVIL ENGINEER 11-10-15 DATE

6-29-16
PLANS APPROVAL DATE

REGISTERED PROFESSIONAL ENGINEER LINAN WANG No. 54714 Exp. 12-31-17 CIVIL STATE OF CALIFORNIA

The State of California or its officers or agents shall not be responsible for the accuracy or completeness of scanned copies of this plan sheet.

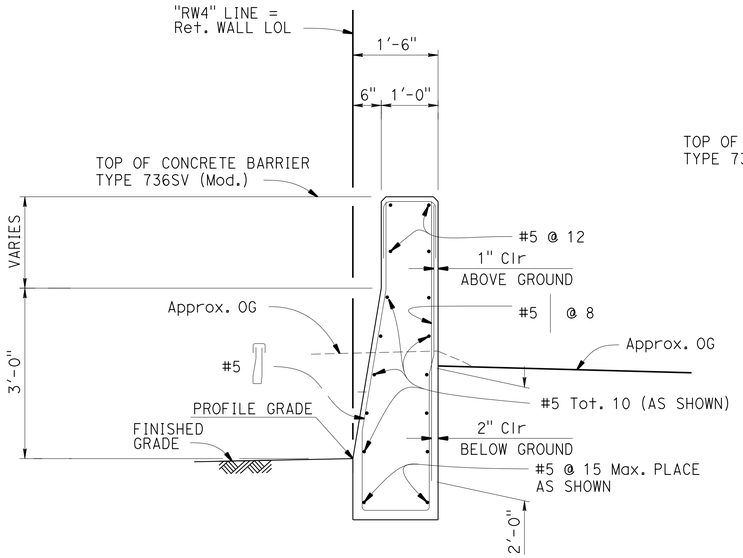

SECTION A-A

CONCRETE BARRIER TYPE 736SV BARRIER (MOD.)

3/4"=1'-0"

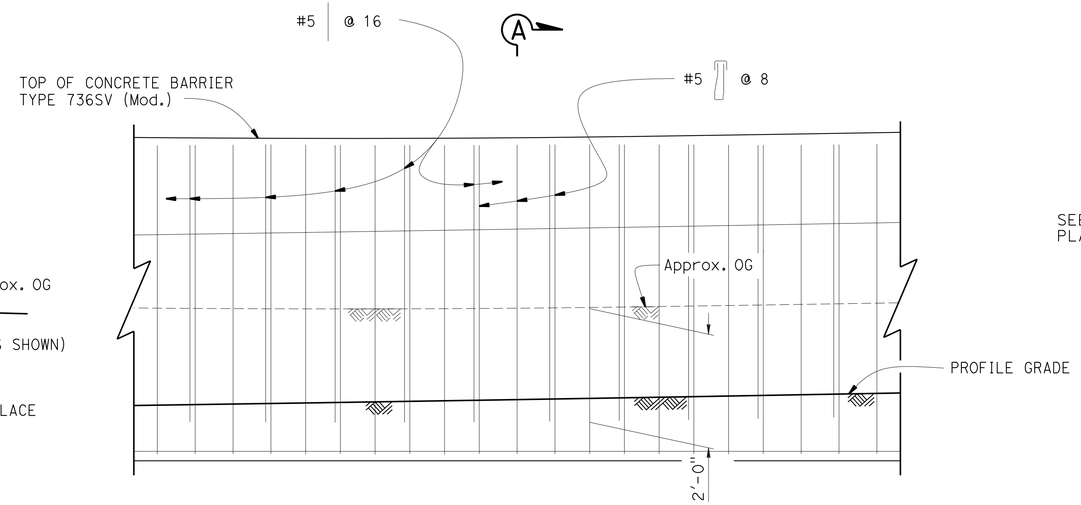

A

PARTIAL ELEVATION

3/4"=1'-0"

Note

Horizontal reinforcement not shown for clarity.

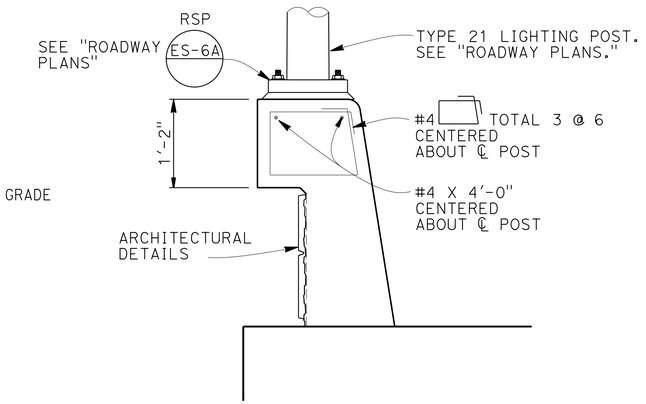

SECTION B-B

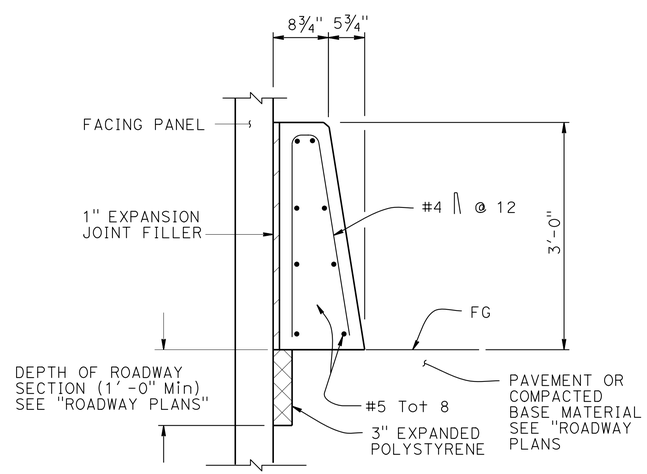

CONCRETE BARRIER
TYPE 60D (MOD) AT FACE OF MSE

1" = 1'-0"

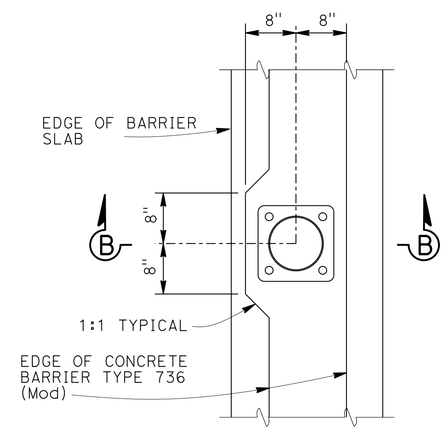

PLAN

PEDESTAL DETAILS

1"=1'-0"

NOTES

1. Slope ground at traffic side of barrier to drain. Maximum slope ±10%. See Std Plan B11-56, Note 3.

2. Extend bar from top of wall to 2'-0" below O.G. Add hook at 6" above bottom of footing for locations where bottom of footing is < 2'-6" below O.G.

	BY	CHECKED
DESIGN	Rafael Salazar	Peter Soin
DETAILS	Jeff Thorne	Peter Soin
QUANTITIES	Rafael Salazar	Linan Wang

STATE OF CALIFORNIA
DEPARTMENT OF TRANSPORTATION

DIVISION OF ENGINEERING SERVICES
STRUCTURE DESIGN
DESIGN BRANCH 4

BRIDGE NO. 35E0051
POST MILE 1.84-1.97

ROUTE 101/ WILLOW INTERCHANGE
RETAINING WALL 4
MISCELLANEOUS DETAILS

STRUCTURES DESIGN DETAIL SHEET (ENGLISH) (REV. 09-01-10)

ORIGINAL SCALE IN INCHES FOR REDUCED PLANS 0 1 2 3

59-3579
PROJECT NUMBER & PHASE: 04000006804 CONTRACT NO.: 04-235654

DISREGARD PRINTS BEARING EARLIER REVISION DATES

REVISION DATES 11-05-15 11-16-15 10-27-15

SHEET 8 OF 19

FILE => 35e0051-u-mscdts01.dgn

USERNAME => s132775 DATE PLOTTED => 17-AUG-2016 TIME PLOTTED => 11:32

DIST	COUNTY	ROUTE	POST MILES TOTAL PROJECT	SHEET No.	TOTAL SHEETS
04	SM	101,114	1.3/2.5, 5.0/5.3	543	568

REGISTERED CIVIL ENGINEER 11-10-15 DATE

6-29-16
PLANS APPROVAL DATE

REGISTERED PROFESSIONAL ENGINEER LINAN WANG No. 54714 Exp. 12-31-17 CIVIL STATE OF CALIFORNIA

The State of California or its officers or agents shall not be responsible for the accuracy or completeness of electronic copies of this plan sheet.

DESIGN DATA

DESIGN: AASHTO LRFD Bridge Design Specifications, 4th Edition with California Amendments.

WS: 33 psf on sound wall

F_t : 54 kips on barrier

EQE: $k_h = 0.2$
$k_v = 0.0$

REINFORCED CONCRETE: f'c = 3600 psi

fy = 60 ksi

n = 8

NOTES:

1. Clearance to reinforcing steel in concrete barrier to be 1".
2. Not all barrier reinforcement shown.
3. No expansion joints in concrete barrier or barrier slab within wall limits.
4. (1) Use Concrete Barrier Type 736(Mod)
5. Sound Wall not permitted on MSE walls unless supported by a CIDH pile foundation. (See "Mechanically Stabilized Embankment Detail No. 5" sheet).
6. Install cable railing or chain link railing when indicated in Project Plans. Refer to Standard Plans B11-7 and B11-47 for anchorage details to top of concrete barrier.
7. Minimum slab length: 40 ft

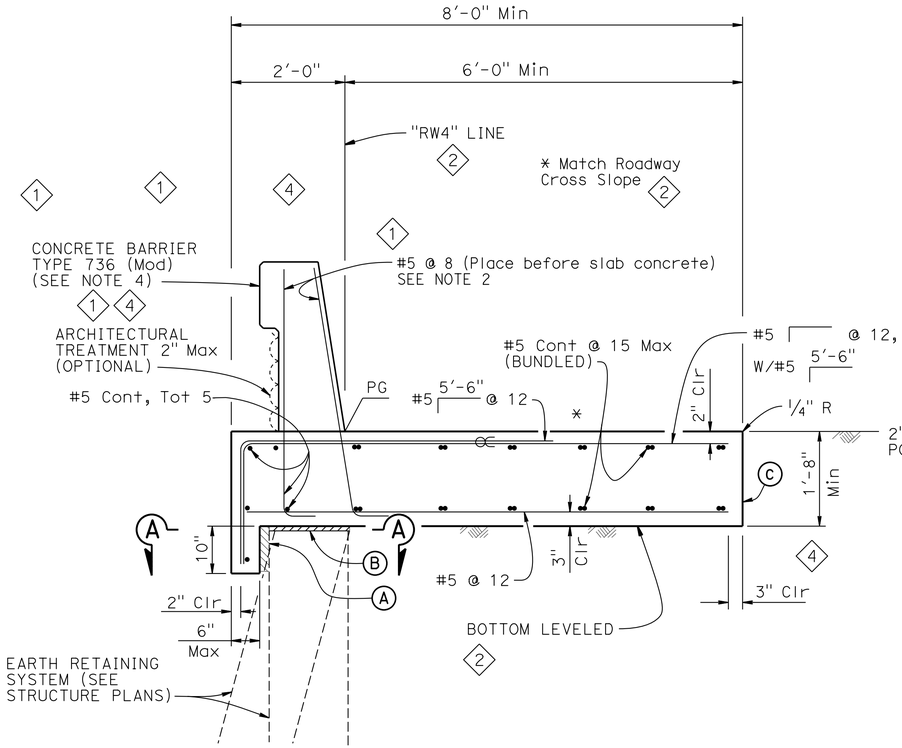

CONCRETE BARRIER SLAB

3/4" = 1'-0"

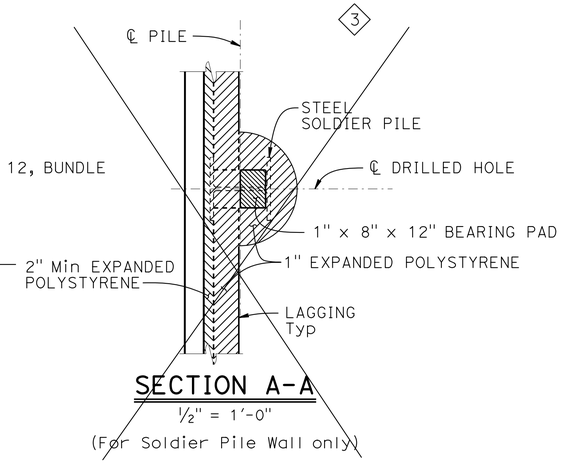

SECTION A-A

1/2" = 1'-0"

(For Soldier Pile Wall only)

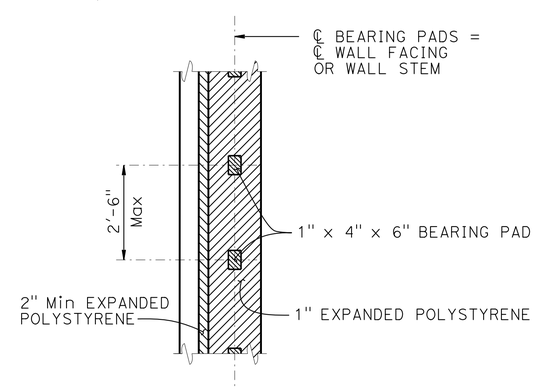

SECTION A-A

1/2" = 1'-0"

(For all other Earth Retaining Systems)

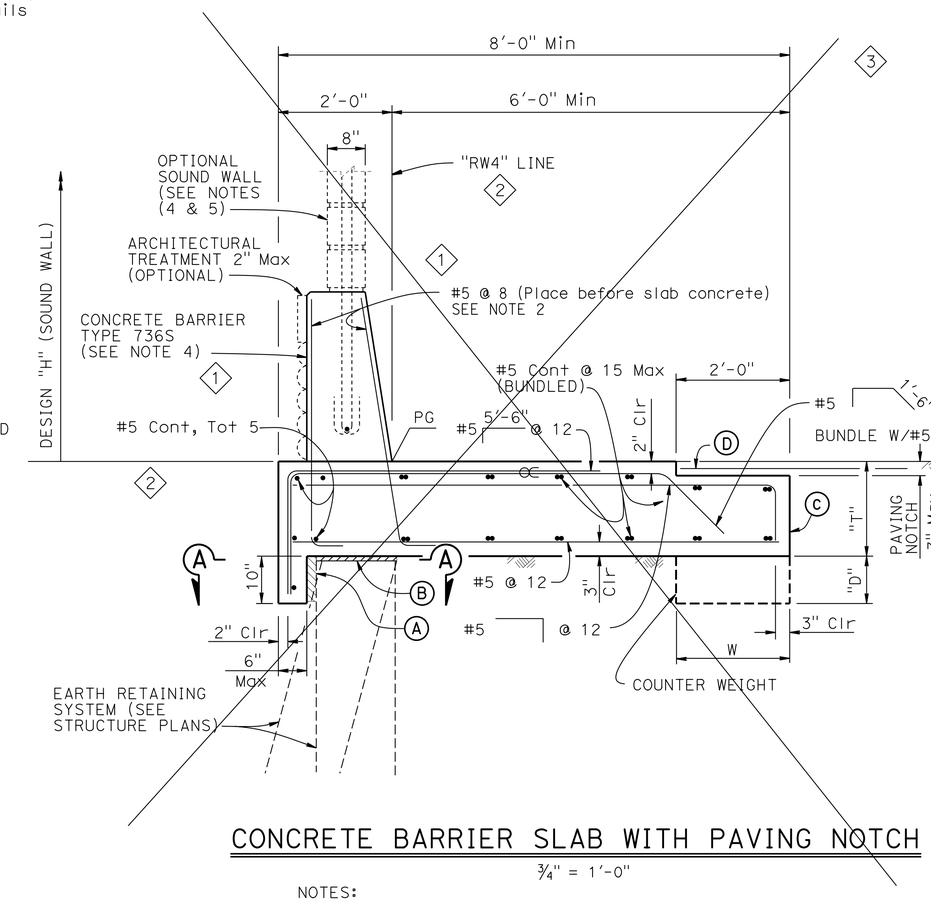

CONCRETE BARRIER SLAB WITH PAVING NOTCH

3/4" = 1'-0"

NOTES:

(A) 2" Min Expanded polystyrene

(1) (B) 1" Expanded Polystyrene on MSE wall. See "SECTION A-A"

(C) Contact joint

(5) ∝ Indicates bundled bars

SPECIAL DETAILS

REVISED STANDARD DRAWING

FILE NO. xs12-090

APPROVAL DATE July 2014

(1) Revised note. (2) Added note. (3) Deleted Detail (4) Revised Detail (5) Deleted Note

STATE OF CALIFORNIA DEPARTMENT OF TRANSPORTATION

DIVISION OF ENGINEERING SERVICES

BRIDGE NO. 35E0051

POST MILE 1.84-1.97

ROUTE 101/ WILLOW INTERCHANGE

RETAINING WALL 4

CONCRETE BARRIER SLAB DETAILS

DS OSD 2147A (ENGLISH STANDARD DRAWING "XS" BORDER REV. (02-02-11)

ORIGINAL SCALE IN INCHES FOR REDUCED PLANS 0 1 2 3

UNIT: 59-3579
PROJECT NUMBER & PHASE: 04000006804 CONTRACT NO.: 04-235654

DISREGARD PRINTS BEARING EARLIER REVISION DATES

REVISION DATES 11-05-15 10-14-15 9-9-15 SHEET 9 OF 19

FILE => 35e0051-w-xs12-090.dgn

USERNAME => s132175 DATE PLOTTED => 17-AUG-2016 TIME PLOTTED => 11:32

DIST	COUNTY	ROUTE	POST MILES TOTAL PROJECT	SHEET No.	TOTAL SHEETS
04	SM	101,114	1.3/2.5, 5.0/5.3	544	568

REGISTERED CIVIL ENGINEER 11-10-15 DATE

6-29-16
PLANS APPROVAL DATE

REGISTERED PROFESSIONAL ENGINEER LINAN WANG No. 54714 Exp. 12-31-17 CIVIL STATE OF CALIFORNIA

The State of California or its officers or agents shall not be responsible for the accuracy or completeness of scanned copies of this plan sheet.

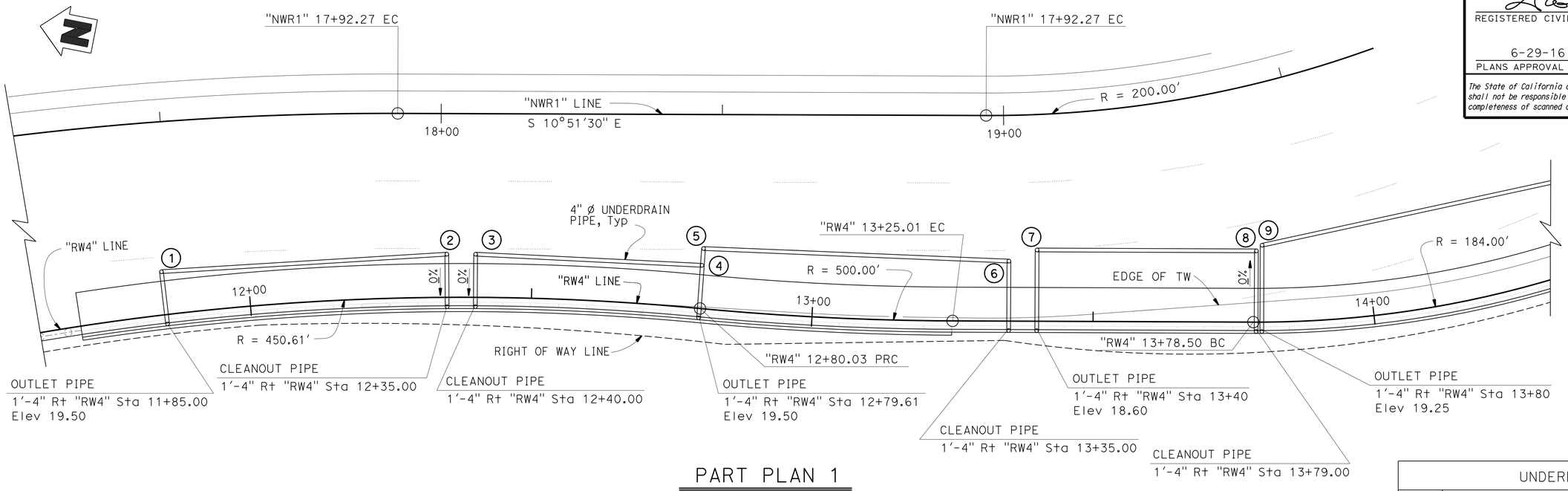

PART PLAN 1

1" = 10'

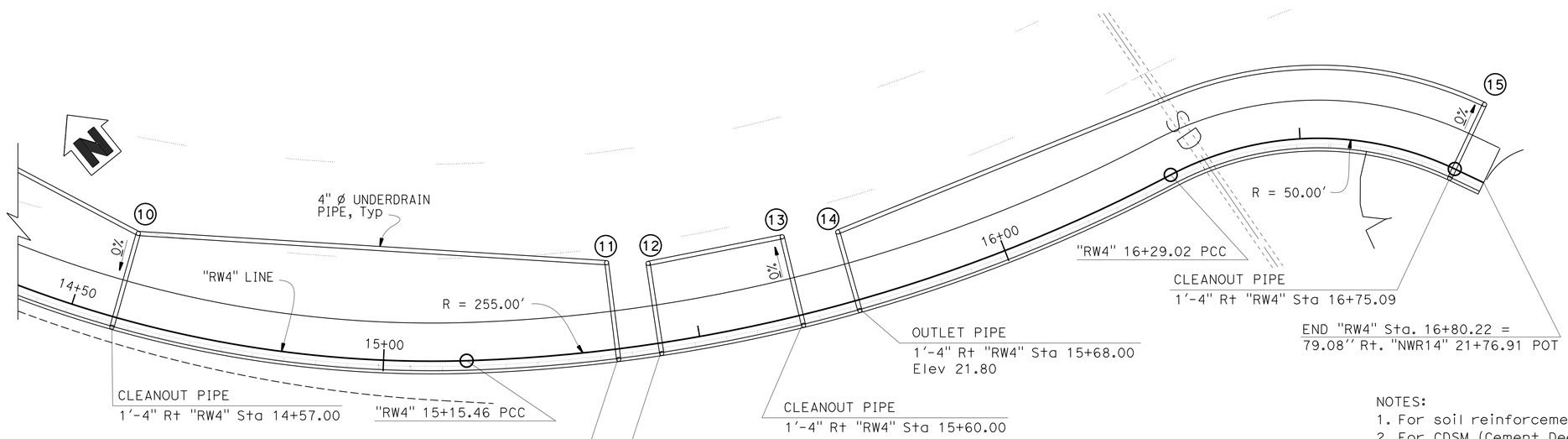

PART PLAN 2

1" = 10'

UNDERDRAIN DATA

NOTE	OFFSET	ELEVATION
1	7'-8" Lt "RW4" Sta 11+85.00	19.70
2	7'-8" Lt "RW4" Sta 12+35.00	21.00
3	7'-8" Lt "RW4" Sta 12+40.00	21.06
4	7'-8" Lt "RW4" Sta 12+79.41	19.87
5	10'-8" Lt "RW4" Sta 12+79.61	20.00
6	10'-8" Lt "RW4" Sta 13+35.00	21.70
7	12'-8" Lt "RW4" Sta 13+40.00	19.00
8	12'-8" Lt "RW4" Sta 13+79.00	20.20
9	13'-8" Lt "RW4" Sta 13+80.00	19.70
10	13'-8" Lt "RW4" Sta 14+57.00	22.00
11	13'-8" Lt "RW4" Sta 15+34.00	19.70
12	12'-8" Lt "RW4" Sta 15+40.00	20.50
13	12'-8" Lt "RW4" Sta 15+60.00	21.80
14	11'-2" Lt "RW4" Sta 15+68.00	22.50
15	11'-2" Lt "RW4" Sta 16+75.00	25.50

NOTES:
1. For soil reinforcement, see "MISCELLANEOUS DETAILS" sheet.
2. For CDSM (Cement Deep Soil Mixing) Limits, see "ROADWAY PLANS'.

	BY	CHECKED
DESIGN	Linan Wang	Peter Soin
DETAILS	Wei Zhang	Peter Soin
QUANTITIES	Rafael Salazar	Linan Wang

STATE OF CALIFORNIA
DEPARTMENT OF TRANSPORTATION

DIVISION OF ENGINEERING SERVICES
STRUCTURE DESIGN
DESIGN BRANCH 4

BRIDGE NO. 35E0051
POST MILE 1.84-1.97

ROUTE 101/ WILLOW INTERCHANGE
RETAINING WALL 4
UNDERDRAIN DETAILS

STRUCTURES DESIGN DETAIL SHEET (ENGLISH) (REV. 09-01-10)

ORIGINAL SCALE IN INCHES FOR REDUCED PLANS 0 1 2 3

UNIT: 59-3579
PROJECT NUMBER & PHASE: 04000006804
CONTRACT NO.: 04-235654

DISREGARD PRINTS BEARING EARLIER REVISION DATES

REVISION DATES: 9-2-15 10-27-15 11-06-15 2-16-16

SHEET 10 OF 19

FILE => 35e0051-x-ddet01.dgn

USERNAME => s132175 DATE PLOTTED => 17-AUG-2016 TIME PLOTTED => 11:32

DIST	COUNTY	ROUTE	POST MILES TOTAL PROJECT	SHEET No.	TOTAL SHEETS
04	SM	101,114	1.3/2.5, 5.0/5.3	545	568

REGISTERED CIVIL ENGINEER 11-10-15 DATE

6-29-16
PLANS APPROVAL DATE

REGISTERED PROFESSIONAL ENGINEER LINAN WANG No. 54714 Exp. 12-31-17 CIVIL STATE OF CALIFORNIA

The State of California or its officers or agents shall not be responsible for the accuracy or completeness of electronic copies of this plan sheet.

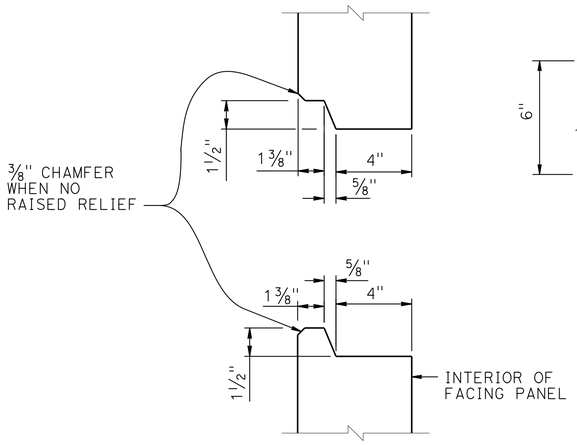

HORIZONTAL JOINT DETAIL

3" = 1'-0"

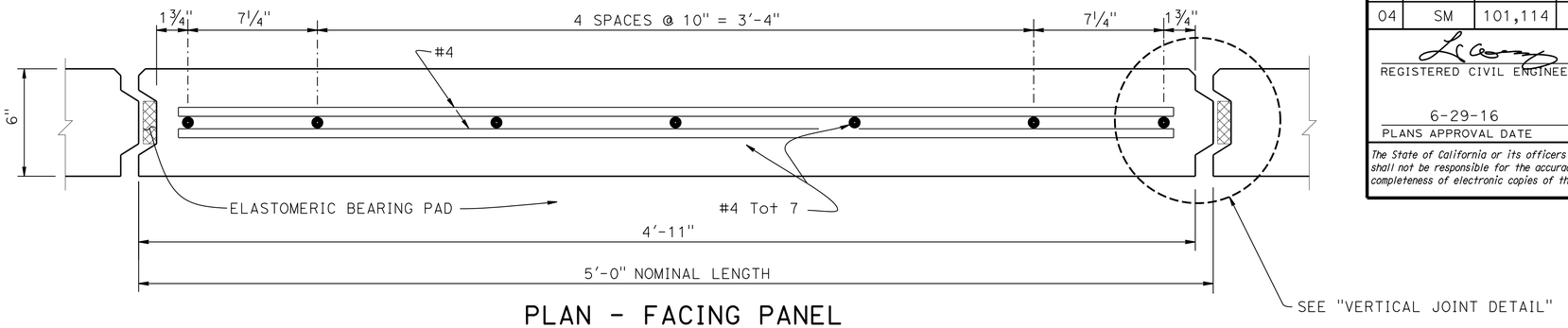

PLAN - FACING PANEL

3" = 1'-0"

NOTES:

1. Architectural treatment not shown
2. Place reinforced elastomeric bearing pads in all of the panel joints between the panels. Place one in each vertical joint where the horizontal joints intersect. Place two per panel in each horizontal joint:
   3/4" x 2 3/8" x 6" for vertical joints
   3/4" x 4" x 6" for horizontal joints
3. Bond a strip of filter fabric, 1'-0" wide, over the full length of all panel joints
4. Top layer of welded wire mats attached parallel to top of panel when top of wall is angled or curved as shown elsewhere in "STRUCTURE PLANS"
5. Eliminate mid level mat when closer than 6" to top mat, continue variable dimension between remaining mats

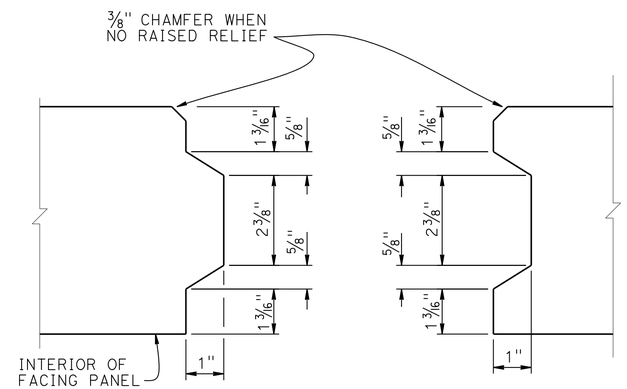

VERTICAL JOINT DETAIL

6" = 1'-0"

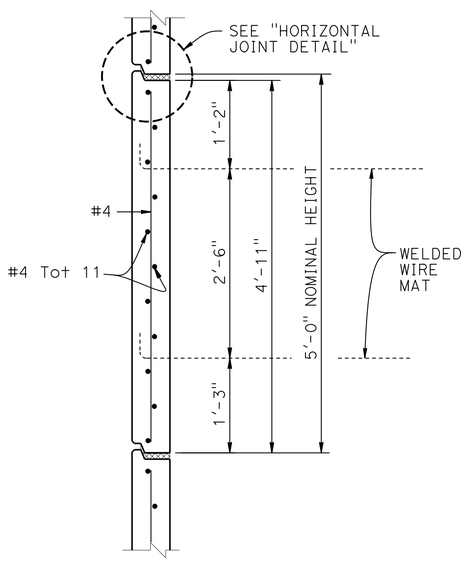

INTERMEDIATE PANEL

1" = 1'-0"

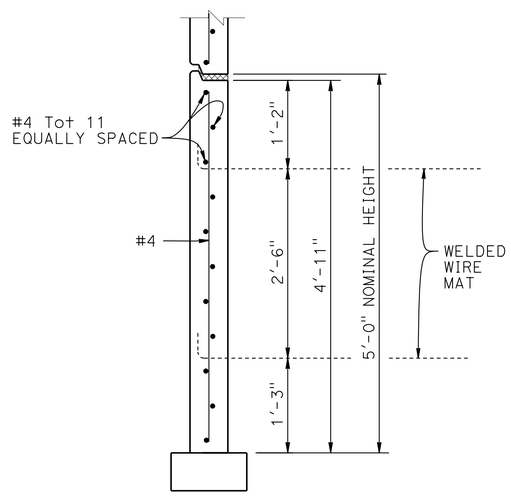

BOTTOM PANEL

1" = 1'-0"

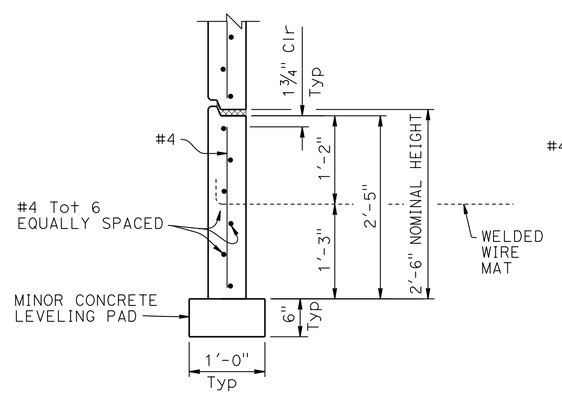

BOTTOM HALF PANEL

1" = 1'-0"

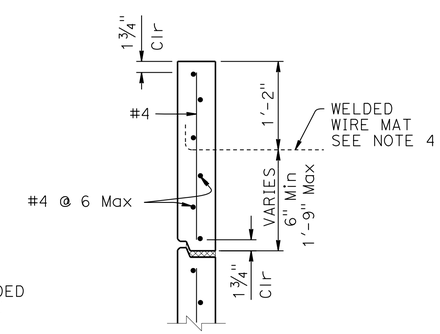

TOP HALF PANEL

1" = 1'-0"

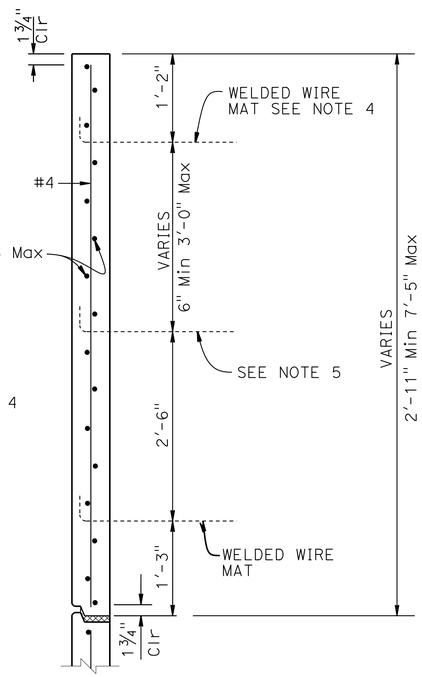

TOP PANEL WITH MULTIPLE MATS

1" = 1'-0"

STANDARD DRAWING

FILE NO. xs13-020-1

APPROVAL DATE July 2014

STATE OF CALIFORNIA DEPARTMENT OF TRANSPORTATION

DIVISION OF ENGINEERING SERVICES

BRIDGE NO. 35E0051

POST MILE 1.84-1.97

ROUTE 101/ WILLOW INTERCHANGE

RETAINING WALL 4

MECHANICALLY STABILIZED EMBANKMENT

DETAILS No. 1

DS OSD 2147A (ENGLISH STANDARD DRAWING "XS" BORDER REV. (02-02-11)

ORIGINAL SCALE IN INCHES FOR REDUCED PLANS 0 1 2 3

UNIT: 59-3579
PROJECT NUMBER & PHASE: 04000006804
CONTRACT NO.: 04-235654

DISREGARD PRINTS BEARING EARLIER REVISION DATES

REVISION DATES 2-22-15 5-6-15

SHEET 11 OF 19

FILE => 35e0051-x-xs13-020-1.dgn

USERNAME => s132175 DATE PLOTTED => 17-AUG-2016 TIME PLOTTED => 11:32

DIST	COUNTY	ROUTE	POST MILES TOTAL PROJECT	SHEET No.	TOTAL SHEETS
04	SM	101,114	1.3/2.5, 5.0/5.3	546	568

REGISTERED CIVIL ENGINEER 11-10-15 DATE

6-29-16
PLANS APPROVAL DATE

REGISTERED PROFESSIONAL ENGINEER LINAN WANG No. 54714 Exp. 12-31-17 CIVIL STATE OF CALIFORNIA

The State of California or its officers or agents shall not be responsible for the accuracy or completeness of electronic copies of this plan sheet.

GENERAL NOTES
LOAD & RESISTANCE FACTOR DESIGN

DESIGN: AASHTO LRFD Bridge Design Specifications, 4th Edition with California Amendments

LIVE LOAD: Surcharge = 240 lb/ft^2

SOIL PARAMETERS:

Internal design ϕ = 34°, γ = 120 lb/ft^3

External design ϕ(Retained Backfill) = 30°, γ = 120 lb/ft^3

ϕ(Foundation) = 30°

K_h = 0.2

PRECAST CONCRETE PANELS:

f'c = 4,000 psi (Concrete compressive strength at 28 days)

fy = 60,000 psi (Yield strength of reinforcement)

SOIL REINFORCEMENT:

Welded wire mats: fy = 65,000 psi (Yield strength)

Coupler: fy = 36,000 psi (Yield strength)

Corrosion rate = 1.1 mils/year

REINFORCED CONCRETE:

f'c = 3,600 psi, except as noted

(Concrete compressive strength at 28 days)

fy = 60,000 psi (Yield strength of reinforcement)

MSE = Mechanically Stabilized Embankment

NOTES:

(A) Distance as required to permit coupler to be swaged

(B) Place #4 x 3'-2", centered on connector mat, but not welded to it

(C) All transverse wires size W15 at various spacing as shown elsewhere in plans

(D) Size of longitudinal wires shown elsewhere in plans

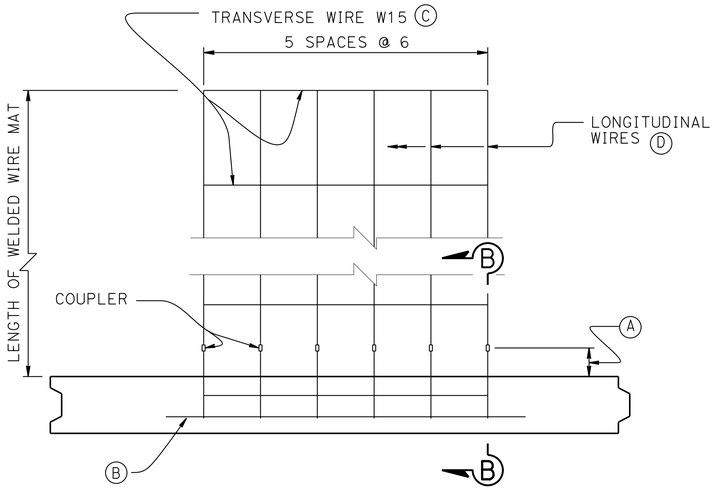

PLAN OF PANEL WITH SIX WIRE MAT

1½" = 1'-0"

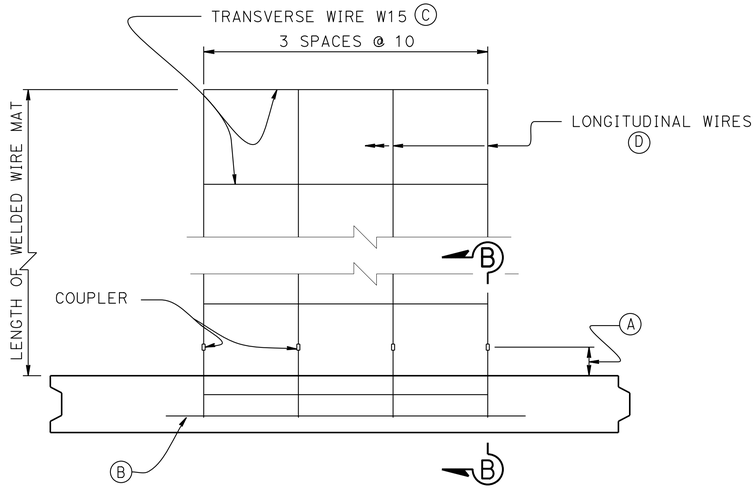

PLAN OF PANEL WITH FOUR WIRE MAT

1½" = 1'-0"

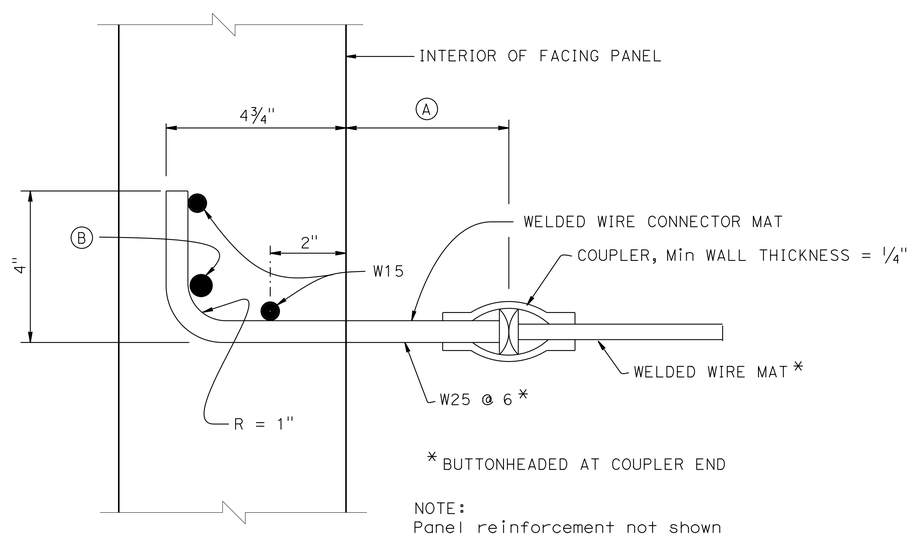

NOTE:
Panel reinforcement not shown

SECTION B-B

6" = 1'-0"

ROUTE 101/ WILLOW INTERCHANGE

RETAINING WALL 4

MECHANICALLY STABILIZED EMBANKMENT

DETAILS No. 2

STANDARD DRAWING

FILE NO. xs13-020-2

APPROVAL DATE July 2014

STATE OF CALIFORNIA DEPARTMENT OF TRANSPORTATION

DIVISION OF ENGINEERING SERVICES

BRIDGE NO. 35E0051

POST MILE 1.84-1.97

DS OSD 2147A (ENGLISH STANDARD DRAWING "XS" BORDER REV. (02-02-11)

ORIGINAL SCALE IN INCHES FOR REDUCED PLANS 0 1 2 3

UNIT: 59-3579

PROJECT NUMBER & PHASE: 04000006804

CONTRACT NO.: 04-235654

DISREGARD PRINTS BEARING EARLIER REVISION DATES

REVISION DATES: 2-27-15 5-6-15

SHEET 12 OF 19

FILE => 35e0051-x-xs13-020-2.dgn

USERNAME => s132175 DATE PLOTTED => 17-AUG-2016 TIME PLOTTED => 11:33

DIST	COUNTY	ROUTE	POST MILES TOTAL PROJECT	SHEET No.	TOTAL SHEETS
04	SM	101,114	1.3/2.5, 5.0/5.3	547	568

REGISTERED CIVIL ENGINEER 11-10-15 DATE

6-29-16
PLANS APPROVAL DATE

REGISTERED PROFESSIONAL ENGINEER LINAN WANG No. 54714 Exp. 12-31-17 CIVIL STATE OF CALIFORNIA

The State of California or its officers or agents shall not be responsible for the accuracy or completeness of electronic copies of this plan sheet.

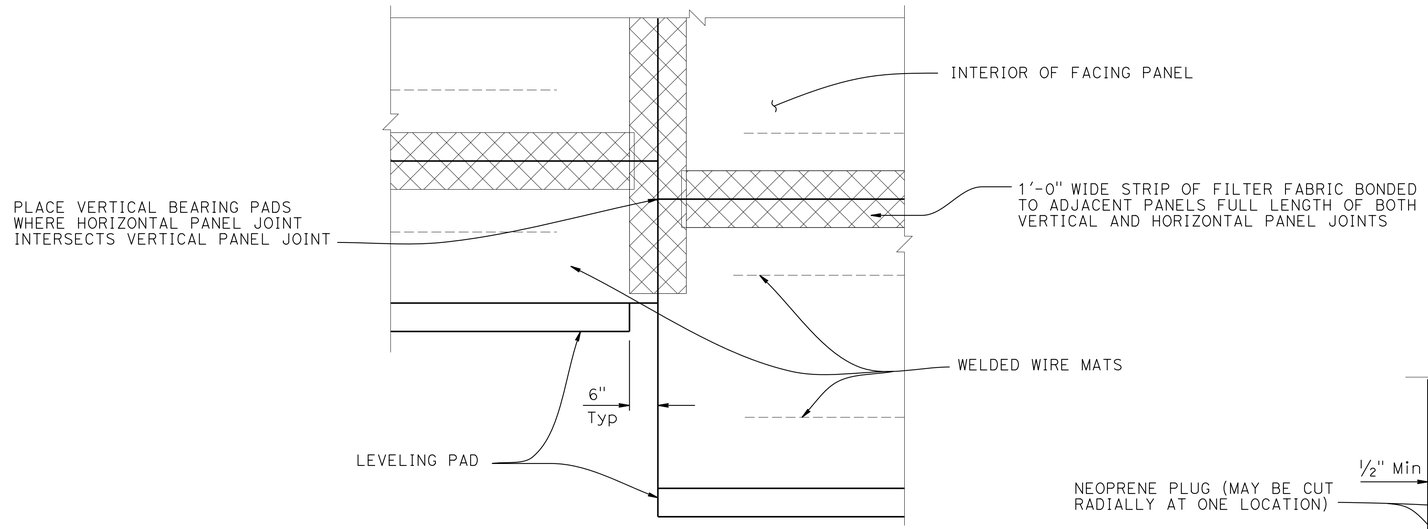

PART ELEVATION

3/4" = 1'-0"

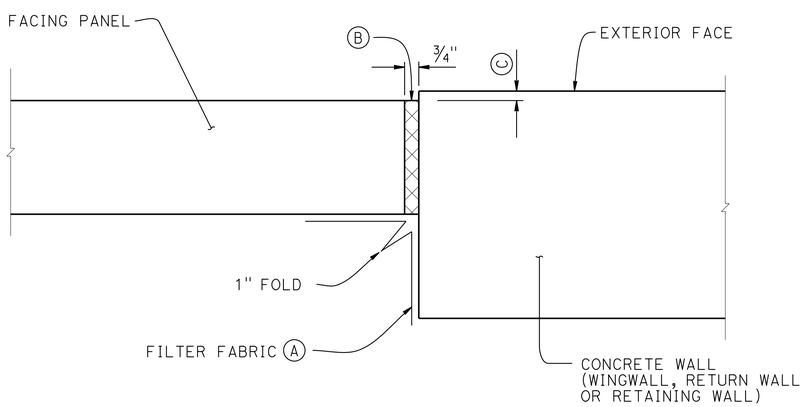

MSE FACING PANEL-TO-CONCRETE WALL JOINT DETAIL

3" = 1'-0"

NOTES:

(A) Bond a strip of filter fabric, 1'-6" wide, to back of MSE panels and the adjacent concrete wall for entire length of vertical joint

(B) Bond expansion joint material to the concrete wall

(C) Offset between face of MSE facing panel and face of the concrete wall as dictated by location of layout lines shown elsewhere in "STRUCTURE PLANS"

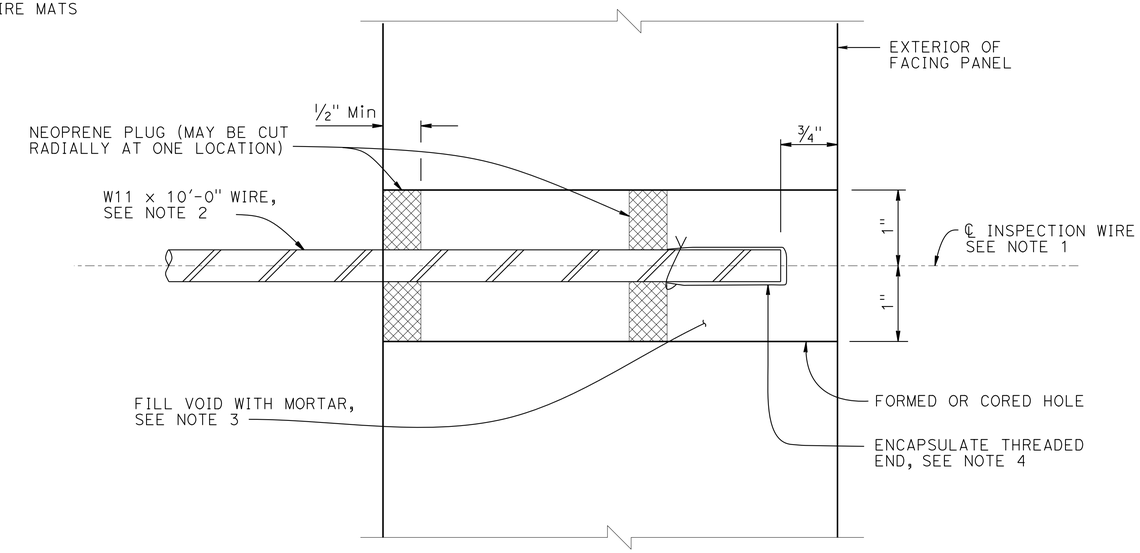

SECTION THRU INSPECTION WIRE

NO SCALE

NOTES:

1. Center inspection wire in facing panel.
2. Fabricated inspection wire from W11 wire representative of the welded wire mats, with 3/8" ø 16 UNC threads for at least 1 1/2" of one end.
3. Place inspection wire horizontal and perpendicular to the wall panel prior to backfilling.
4. Encapsulate threaded end with corrosion inhibiting mastic, vinyl covering, and secure with plastic tie.

UNC = Unified Coarse Threads

ROUTE 101/ WILLOW INTERCHANGE

RETAINING WALL 4

MECHANICALLY STABILIZED EMBANKMENT

DETAILS No. 3

STANDARD DRAWING

FILE NO. xs13-020-3

APPROVAL DATE July 2014

STATE OF CALIFORNIA DEPARTMENT OF TRANSPORTATION

DIVISION OF ENGINEERING SERVICES

BRIDGE NO. 35E0051

POST MILE 1.84-1.97

DS OSD 2147A (ENGLISH STANDARD DRAWING "XS" BORDER REV. (02-02-11)

ORIGINAL SCALE IN INCHES FOR REDUCED PLANS 0 1 2 3

UNIT: 59-3579
PROJECT NUMBER & PHASE: 04000006804
CONTRACT NO.: 04-235654

DISREGARD PRINTS BEARING EARLIER REVISION DATES

REVISION DATES 2-22-15 5-6-15

SHEET 13 OF 19

FILE => 35e0051-x-xs13-020-3.dgn

USERNAME => s132176 DATE PLOTTED => 17-AUG-2016 TIME PLOTTED => 11:33

DIST	COUNTY	ROUTE	POST MILES TOTAL PROJECT	SHEET No.	TOTAL SHEETS
04	SM	101,114	1.3/2.5, 5.0/5.3	548	568

REGISTERED CIVIL ENGINEER 11-10-15 DATE

6-29-16
PLANS APPROVAL DATE

REGISTERED PROFESSIONAL ENGINEER LINAN WANG No. 54714 Exp. 12-31-17 CIVIL STATE OF CALIFORNIA

The State of California or its officers or agents shall not be responsible for the accuracy or completeness of electronic copies of this plan sheet.

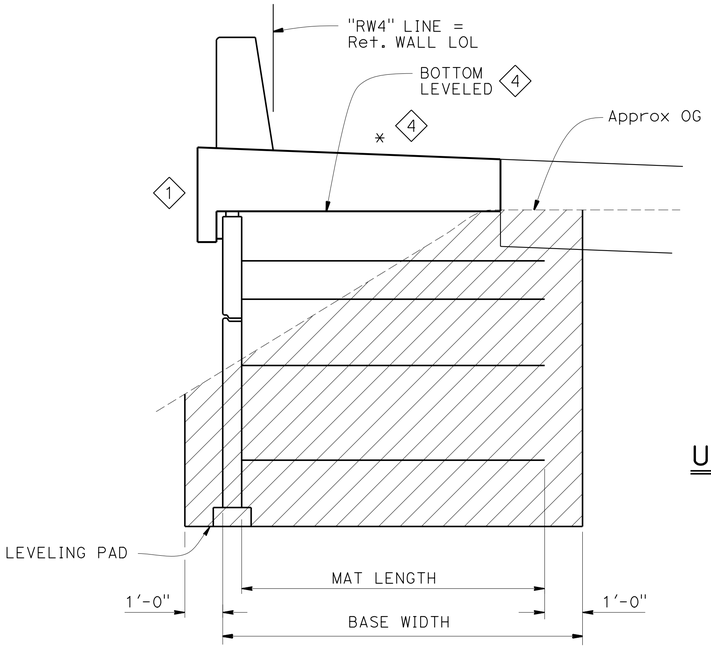

1 LIMITS OF EXCAVATION
½" = 1'-0"

4 * Match Roadway Cross Slope

2

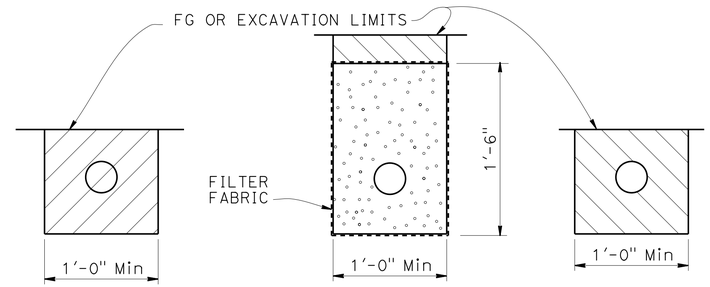

OUTLET PIPE CLEANOUT PIPE

EXCAVATION BACKFILL

UNPERFORATED OUTLET OR CLEAN OUT PIPE FOR UNDERDRAIN

NO SCALE

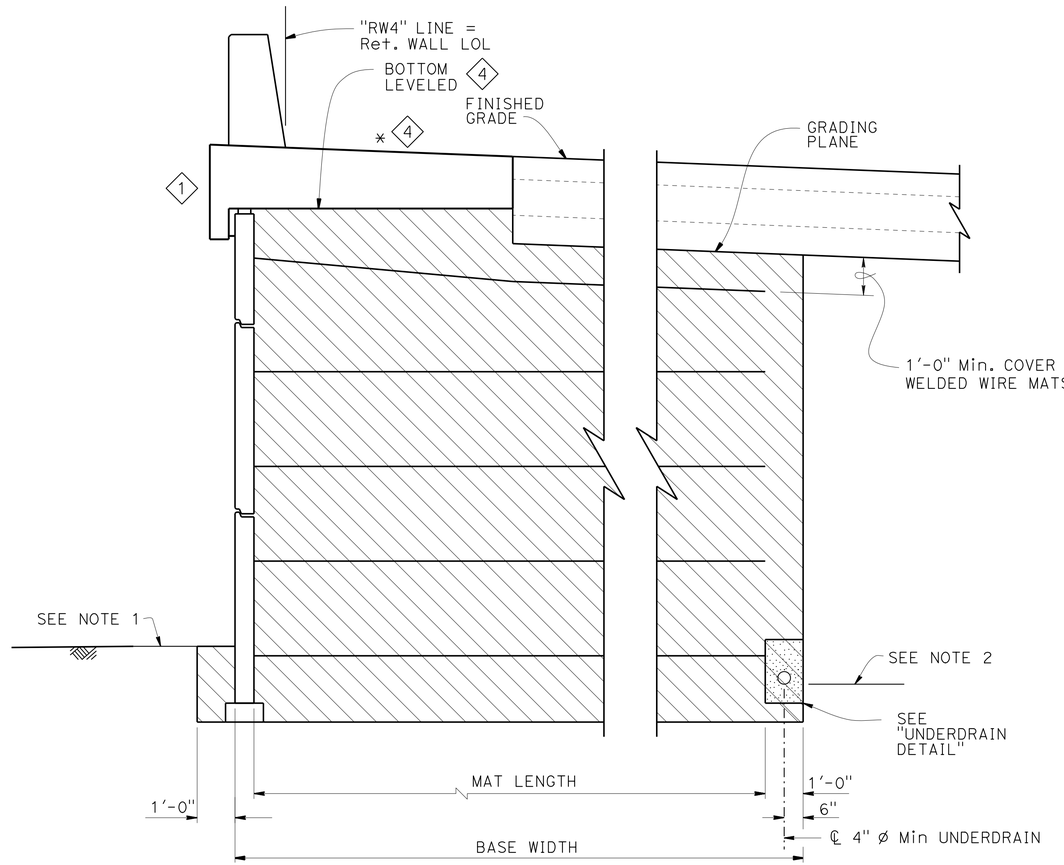

LIMITS OF BACKFILL

1 ROADWAY SECTION
½" = 1'-0"

NOTES:

1. Limits to FG except to GP when in roadway section
2. Locate underdrain behind bottom level of welded wire mats wherever possible, or at elevation needed to drain, as shown elsewhere on plans
3. Place perforated pipe underdrain of diameter shown elsewhere on plans or minimum 4" ø smoothed wall PVC or minimum 8" ø corrugated HDPE
4. Maximum spacing of outlet pipe is 200 feet
5. At sags in profile of underdrain, install outlet pipe for each direction of flow

LEGEND:

- Limits of Structure Excavation
- Limits of Structure Backfill
- Limits of Permeable Material

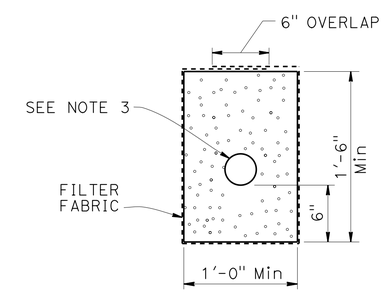

UNDERDRAIN DETAIL

SPECIAL DETAILS

ROUTE 101/WILLOW INTERCHANGE

RETAINING WALL 4

MECHANICALLY STABILIZED EMBANKMENT

DETAILS No. 4 3

REVISED STANDARD DRAWING

FILE NO. xs13-020-6

APPROVAL DATE July 2014

1 Revised Detail. 3 Rearranged Detail Sheet Number.
2 Deleted Detail 4 Added Note

STATE OF CALIFORNIA DEPARTMENT OF TRANSPORTATION

DIVISION OF ENGINEERING SERVICES

BRIDGE NO. 35E0051
POST MILE 1.84-1.97

DS OSD 2147A (ENGLISH STANDARD DRAWING "XS" BORDER REV. (02-02-11))

ORIGINAL SCALE IN INCHES FOR REDUCED PLANS 0 1 2 3

UNIT: 59-3579
PROJECT NUMBER & PHASE: 04000006804
CONTRACT NO.: 04-235654

DISREGARD PRINTS BEARING EARLIER REVISION DATES

REVISION DATES 5-6-15 10-27-15 11-05-15

SHEET 14 OF 19

FILE => 35e0051-x-xs13-020-6.dgn

USERNAME => s132775 DATE PLOTTED => 17-AUG-2016 TIME PLOTTED => 11:33

DIST	COUNTY	ROUTE	POST MILES TOTAL PROJECT	SHEET No.	TOTAL SHEETS
04	SM	101,114	1.3/2.5, 5.0/5.3	549	568

REGISTERED CIVIL ENGINEER 11-10-15 DATE

6-29-16
PLANS APPROVAL DATE

REGISTERED PROFESSIONAL ENGINEER
LINAN WANG
No. 54714
Exp. 12-31-17
CIVIL
STATE OF CALIFORNIA

The State of California or its officers or agents shall not be responsible for the accuracy or completeness of scanned copies of this plan sheet.

NOTE

For Barrier Architectural Treatment details and dimensions not shown, see "ARCHITECTURAL DETAILS NO. 4" sheet.

✦ Indicates control point for Oak Tree Motif.

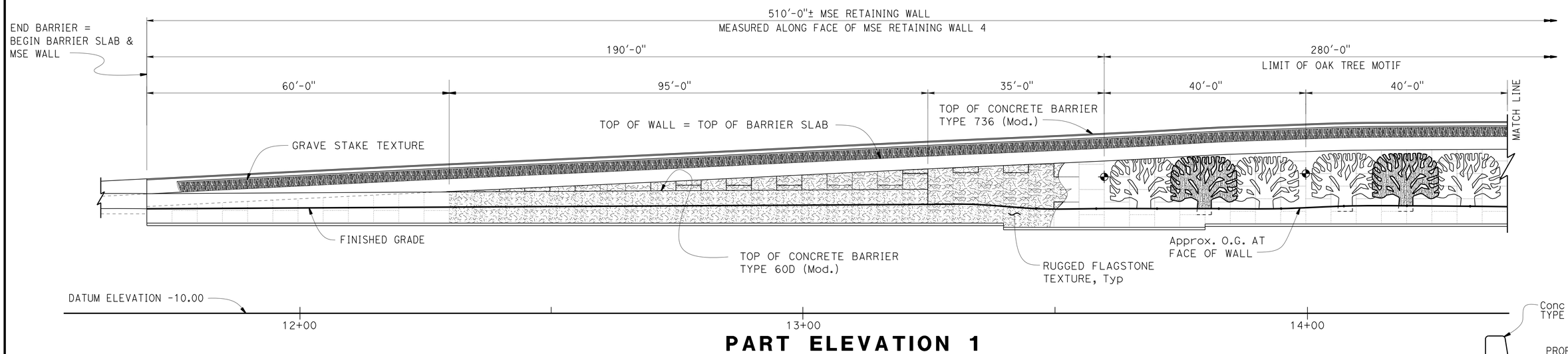

PART ELEVATION 1
OAK TREE MOTIF - ON FACE OF MSE WALL

1" = 10'

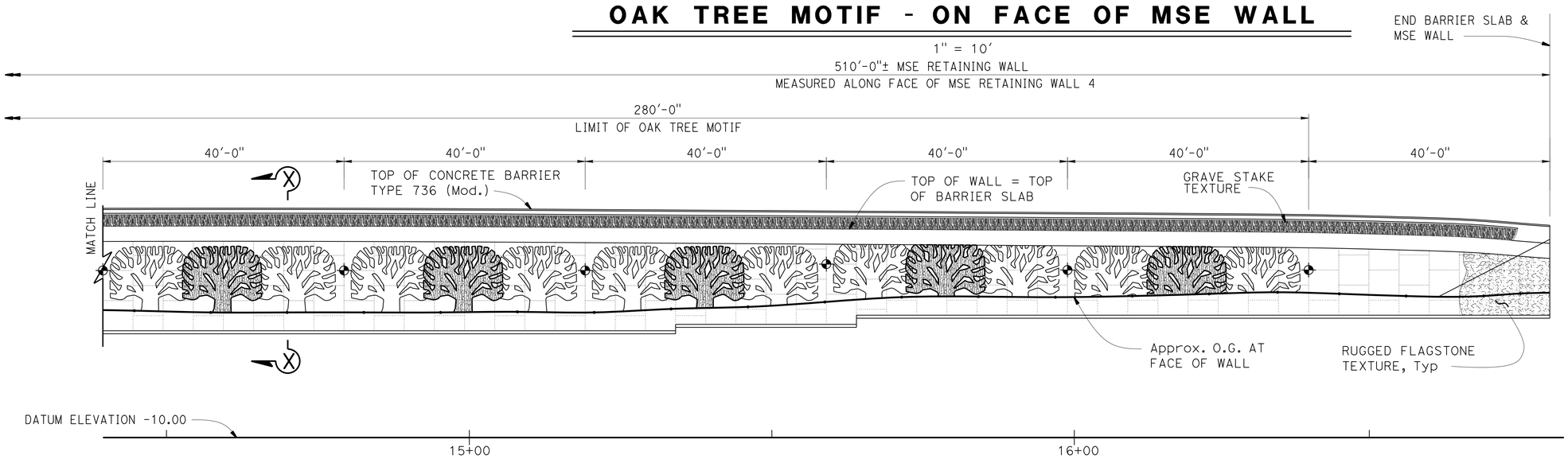

PART ELEVATION 2
OAK TREE MOTIF - ON FACE OF MSE WALL

1" = 10'

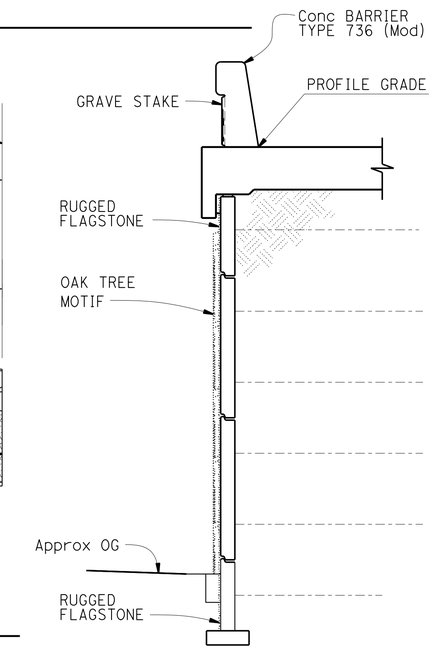

SECTION X-X
NO SCALE

	BY	CHECKED
DESIGN	Rafael Salazar	Peter Soin
DETAILS	Jeff Thorne	Peter Soin
QUANTITIES	Rafael Salazar	Linan Wang

STATE OF CALIFORNIA
DEPARTMENT OF TRANSPORTATION

DIVISION OF ENGINEERING SERVICES
STRUCTURE DESIGN
DESIGN BRANCH 4

BRIDGE NO. 35E0051
POST MILE 1.84-1.97

ROUTE 101/WILLOW INTERCHANGE
RETAINING WALL 4
ARCHITECTURAL DETAILS NO. 1

STRUCTURES DESIGN DETAIL SHEET (ENGLISH) (REV. 09-01-10)

ORIGINAL SCALE IN INCHES FOR REDUCED PLANS 0 1 2 3

UNIT: 59-3579
PROJECT NUMBER & PHASE: 04000006804
CONTRACT NO.: 04-235654

DISREGARD PRINTS BEARING EARLIER REVISION DATES

REVISION DATES: 10-16-15 8-18-15 10-27-15 10-28-15

SHEET 15 OF 19

FILE => 35e0051-y-aesthdts01.dgn

USERNAME => s132175 DATE PLOTTED => 17-AUG-2016 TIME PLOTTED => 11:33

DIST	COUNTY	ROUTE	POST MILES TOTAL PROJECT	SHEET No.	TOTAL SHEETS
04	SM	101,114	1.3/2.5, 5.0/5.3	550	568

REGISTERED CIVIL ENGINEER 11-10-15 DATE

6-29-16
PLANS APPROVAL DATE

REGISTERED PROFESSIONAL ENGINEER LINAN WANG No. 54714 Exp. 12-31-17 CIVIL STATE OF CALIFORNIA

The State of California or its officers or agents shall not be responsible for the accuracy or completeness of scanned copies of this plan sheet.

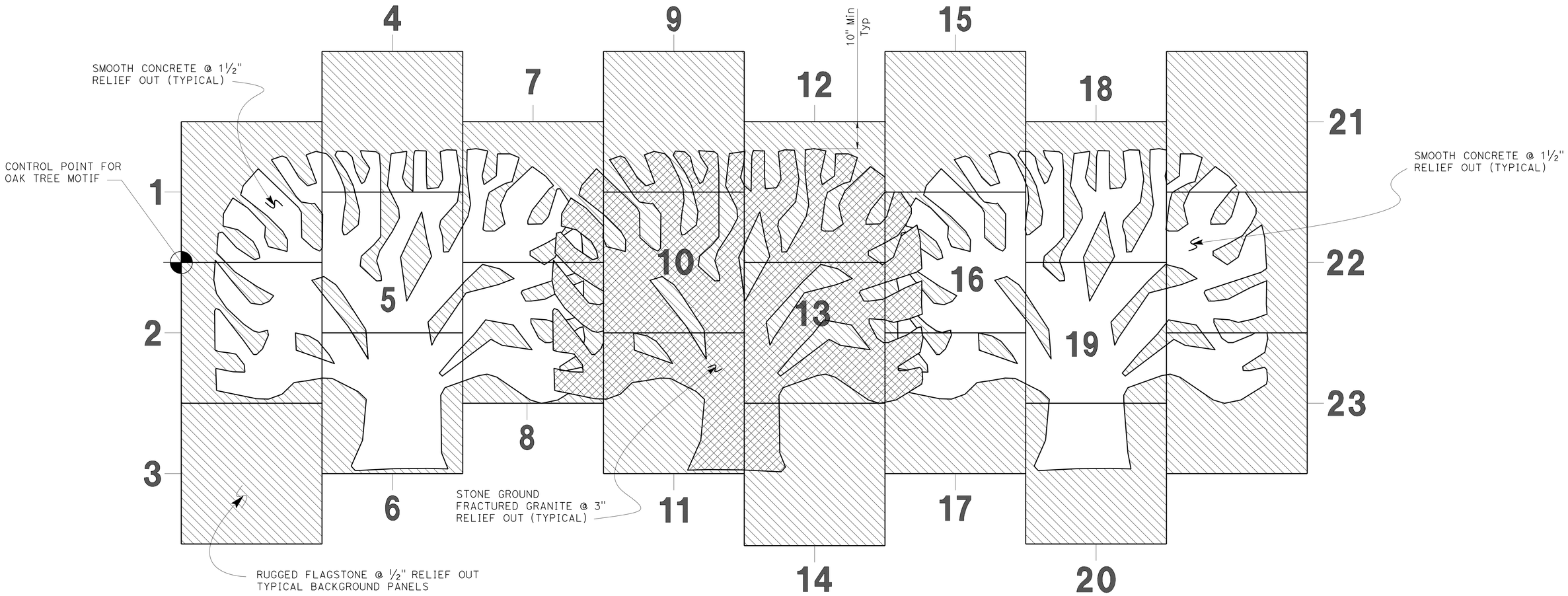

* Relief Measured from face of MSE Panel

NOTE: 23 Individual Panels

OAK TREE MOTIF - ON FACE OF MSE WALL

No Scale

DESIGN	BY Rafael Salazar	CHECKED Peter Soin	
DETAILS	BY Jeff Thorne	CHECKED Peter Soin	
QUANTITIES	BY Rafael Salazar	CHECKED Linan Wang	

STATE OF CALIFORNIA
DEPARTMENT OF TRANSPORTATION

DIVISION OF ENGINEERING SERVICES
STRUCTURE DESIGN
DESIGN BRANCH 4

BRIDGE NO. 35E0051
POST MILE 1.84-1.97

ROUTE 101/ WILLOW INTERCHANGE
RETAINING WALL 4
ARCHITECTURAL DETAILS NO. 2

STRUCTURES DESIGN DETAIL SHEET (ENGLISH) (REV. 09-01-10)

ORIGINAL SCALE IN INCHES FOR REDUCED PLANS 0 1 2 3

UNIT: 59-3579
PROJECT NUMBER & PHASE: 04000006804
CONTRACT NO.: 04-235654

DISREGARD PRINTS BEARING EARLIER REVISION DATES

REVISION DATES: 6-2-15 11-16-15 10-18-15 5-18-16

SHEET 16 OF 19

FILE => 35e0051-y-aesthdts02.dgn

USERNAME => s132175 DATE PLOTTED => 17-AUG-2016 TIME PLOTTED => 11:33

DIST	COUNTY	ROUTE	POST MILES TOTAL PROJECT	SHEET No.	TOTAL SHEETS
04	SM	101,114	1.3/2.5, 5.0/5.3	551	568

REGISTERED CIVIL ENGINEER 11-10-15 DATE

6-29-16
PLANS APPROVAL DATE

REGISTERED PROFESSIONAL ENGINEER LINAN WANG No. 54714 Exp. 12-31-17 CIVIL STATE OF CALIFORNIA

The State of California or its officers or agents shall not be responsible for the accuracy or completeness of scanned copies of this plan sheet.

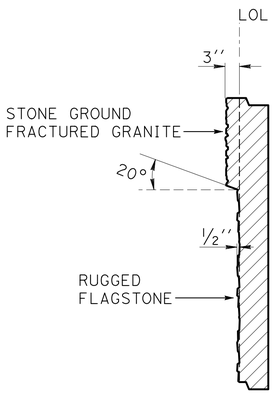

SECTION D-D

NO SCALE

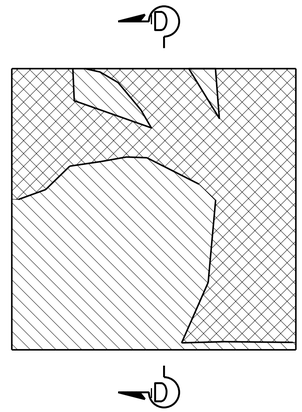

MSE PANEL - #11

NO SCALE

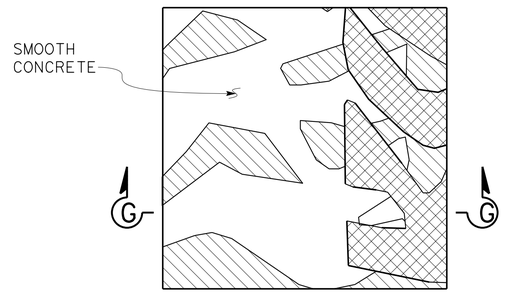

MSE PANEL - #8

NO SCALE

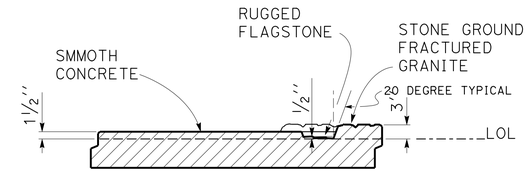

SECTION G-G

NO SCALE

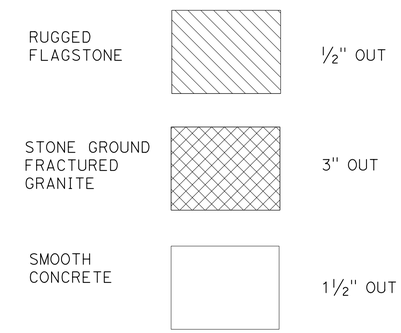

TEXTURE LEGEND

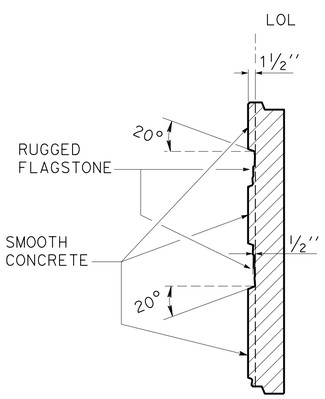

SECTION F-F

NO SCALE

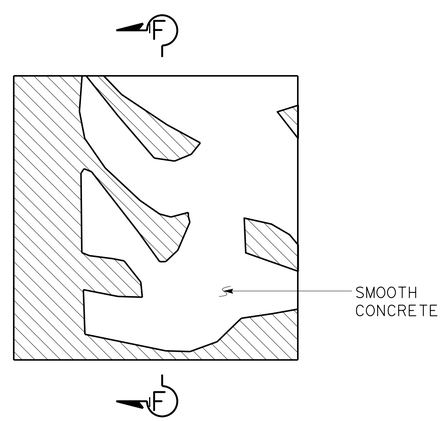

MSE PANEL - #2

NO SCALE

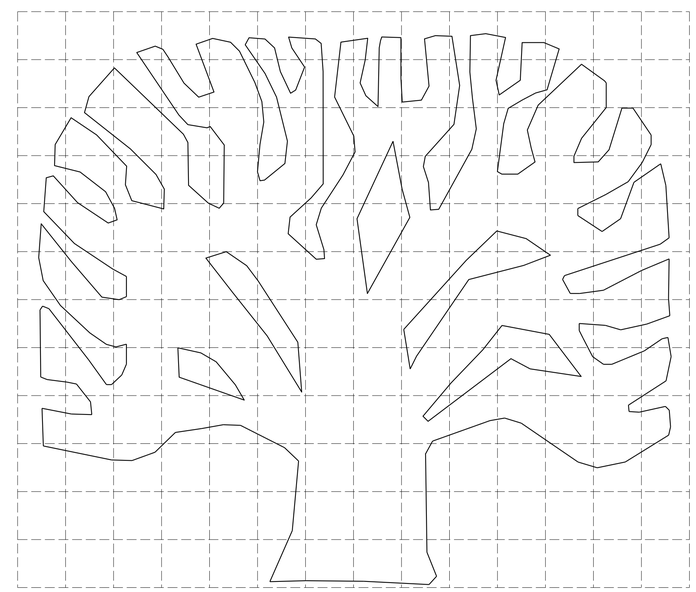

1'x 1' GRID TO SCALE

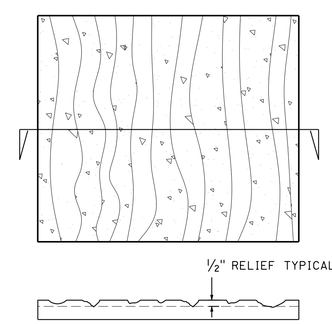

STONE GROUND FRACTURED GRANITE

NO SCALE

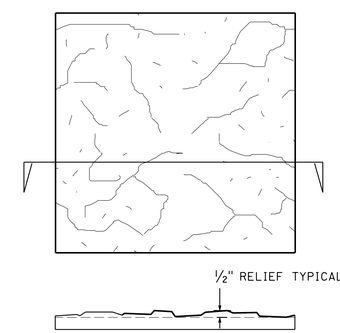

RUGGED FLAGSTONE TEXTURE

NO SCALE

DESIGN	BY Rafael Salazar	CHECKED Peter Soin	
DETAILS	BY Jeff Thorne	CHECKED Peter Soin	
QUANTITIES	BY Rafael Salazar	CHECKED Linan Wang	

STATE OF CALIFORNIA
DEPARTMENT OF TRANSPORTATION

DIVISION OF ENGINEERING SERVICES
STRUCTURE DESIGN
DESIGN BRANCH 4

BRIDGE NO. 35E0051
POST MILE 1.84-1.97

ROUTE 101/ WILLOW INTERCHANGE
RETAINING WALL 4
ARCHITECTURAL DETAILS NO. 3

STRUCTURES DESIGN DETAIL SHEET (ENGLISH) (REV. 09-01-10)

ORIGINAL SCALE IN INCHES FOR REDUCED PLANS 0 1 2 3

UNIT: 59-3579
PROJECT NUMBER & PHASE: 04000006804
CONTRACT NO.: 04-235654

DISREGARD PRINTS BEARING EARLIER REVISION DATES

REVISION DATES: 6-2-15 11-17-15 5-12-15 5-18-15

SHEET 17 OF 19

FILE => 35e0051-y-aestndts03.dgn

USERNAME => s132175 DATE PLOTTED => 17-AUG-2016 TIME PLOTTED => 11:33

DIST	COUNTY	ROUTE	POST MILES TOTAL PROJECT	SHEET No.	TOTAL SHEETS
04	SM	101,114	1.3/2.5, 5.0/5.3	552	568

REGISTERED CIVIL ENGINEER 11-10-15 DATE

6-29-16
PLANS APPROVAL DATE

REGISTERED PROFESSIONAL ENGINEER LINAN WANG No. 54714 Exp. 12-31-17 CIVIL STATE OF CALIFORNIA

The State of California or its officers or agents shall not be responsible for the accuracy or completeness of scanned copies of this plan sheet.

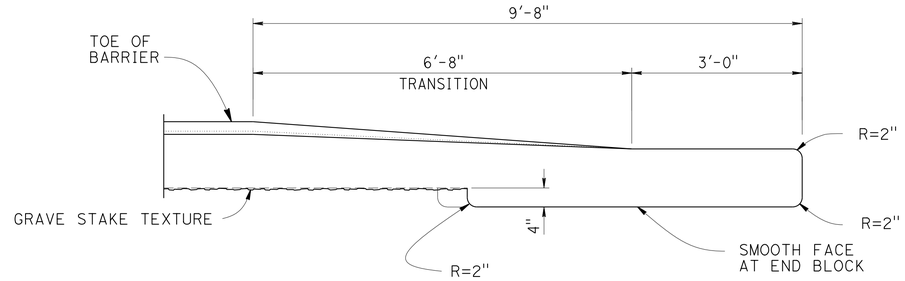

SECTION B-B

3/4"=1'-0"

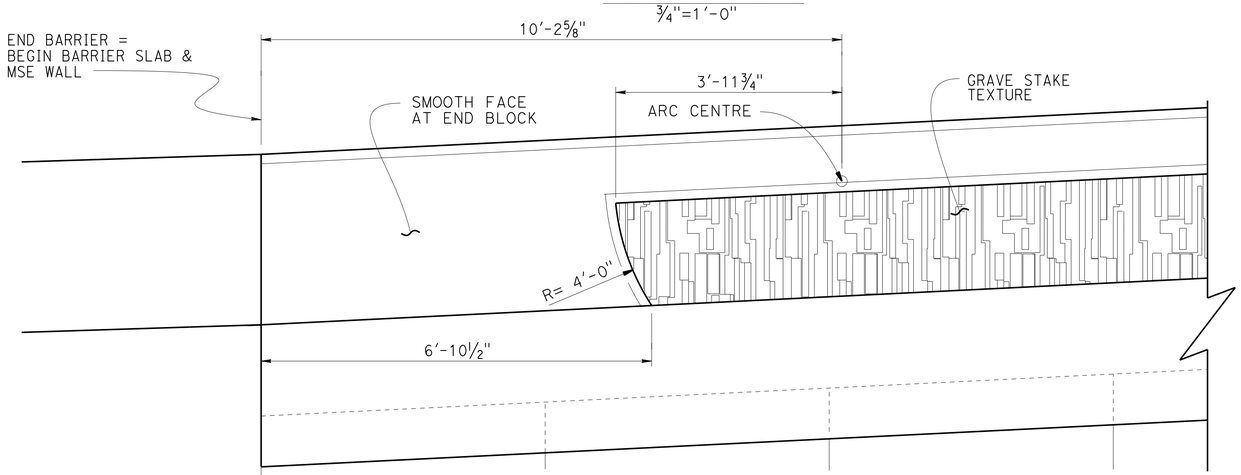

PART ELEVATION OF CONCRETE BARRIER TYPE 736 (MOD) AT BEGIN WALL

3/4" = 1'-0"

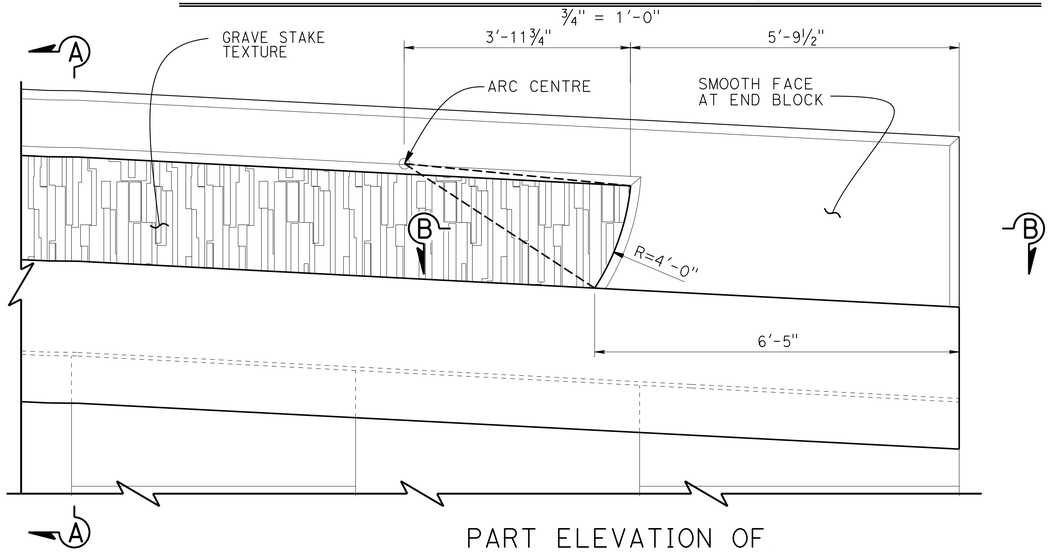

PART ELEVATION OF CONCRETE BARRIER TYPE 736 (MOD) AT END WALL

3/4" = 1'-0"

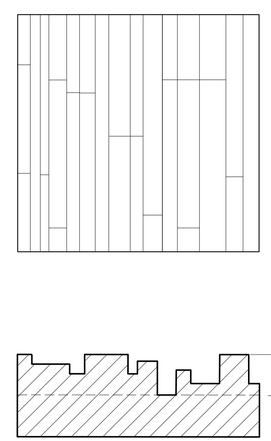

GRAVE STAKE TEXTURE
3/4" - 3 1/4" WIDTH OF RANDOM FLUTES, TYP

GRAVE STAKE TEXTURE

NO SCALE

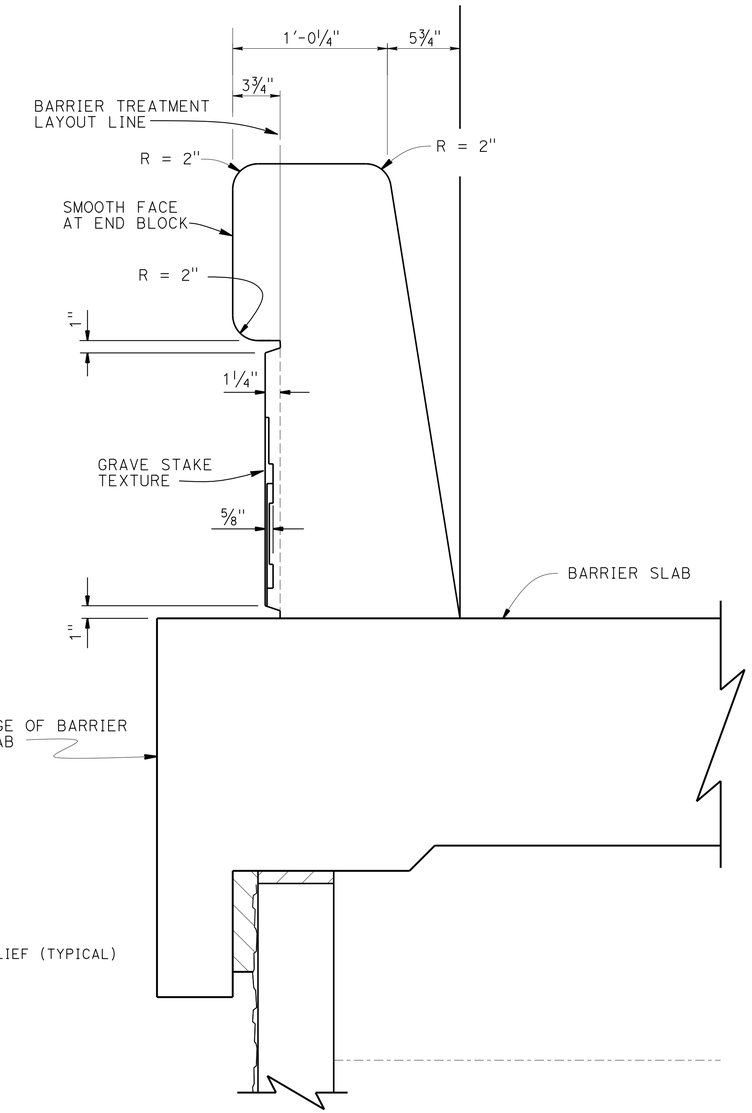

SECTION A-A

2"=1'-0"

DESIGN	BY Rafael Salazar	CHECKED Peter Soin	
DETAILS	BY Jeff Thorne	CHECKED Peter Soin	
QUANTITIES	BY Rafael Salazar	CHECKED Linan Wang	

STATE OF CALIFORNIA
DEPARTMENT OF TRANSPORTATION

DIVISION OF ENGINEERING SERVICES
STRUCTURE DESIGN
DESIGN BRANCH 4

BRIDGE NO. 35E0051
POST MILE 1.84-1.97

ROUTE 101/ WILLOW INTERCHANGE
RETAINING WALL 4
ARCHITECTURAL DETAILS NO. 4

STRUCTURES DESIGN DETAIL SHEET (ENGLISH) (REV. 09-01-10)

ORIGINAL SCALE IN INCHES FOR REDUCED PLANS 0 1 2 3

UNIT: 59-3579
PROJECT NUMBER & PHASE: 04000006804
CONTRACT NO.: 04-235654

DISREGARD PRINTS BEARING EARLIER REVISION DATES

REVISION DATES 11-17-15 8-12-16 10-12-16

SHEET 18 OF 19

FILE => 35e0051-y-aestndts04.dgn

USERNAME => s132175 DATE PLOTTED => 17-AUG-2016 TIME PLOTTED => 11:33

DIST	COUNTY	ROUTE	POST MILES TOTAL PROJECT	SHEET No.	TOTAL SHEETS
04	SM	101,114	1.3/2.5, 5.0/5.3	553	568

REGISTERED CIVIL ENGINEER — DATE: 10-20-15

6-29-16
APPROVAL DATE

PROFESSIONAL GEOLOGIST — Matthew Gaffney — No. 8045 — Exp. 6-30-16 — STATE OF CALIFORNIA

The State of California or its officers or agents shall not be responsible for the accuracy or completeness of electronic copies of this plan sheet.

This LOTB sheet was prepared in accordance with the Caltrans Soil & Rock Logging, Classification, & Presentation Manual (2010 Edition).

See 2010 Standard Plans A10F and A10G for Soil Legend, and A10H for Rock Legend.

Note: Groundwater was not measured in Boring R-14-023.

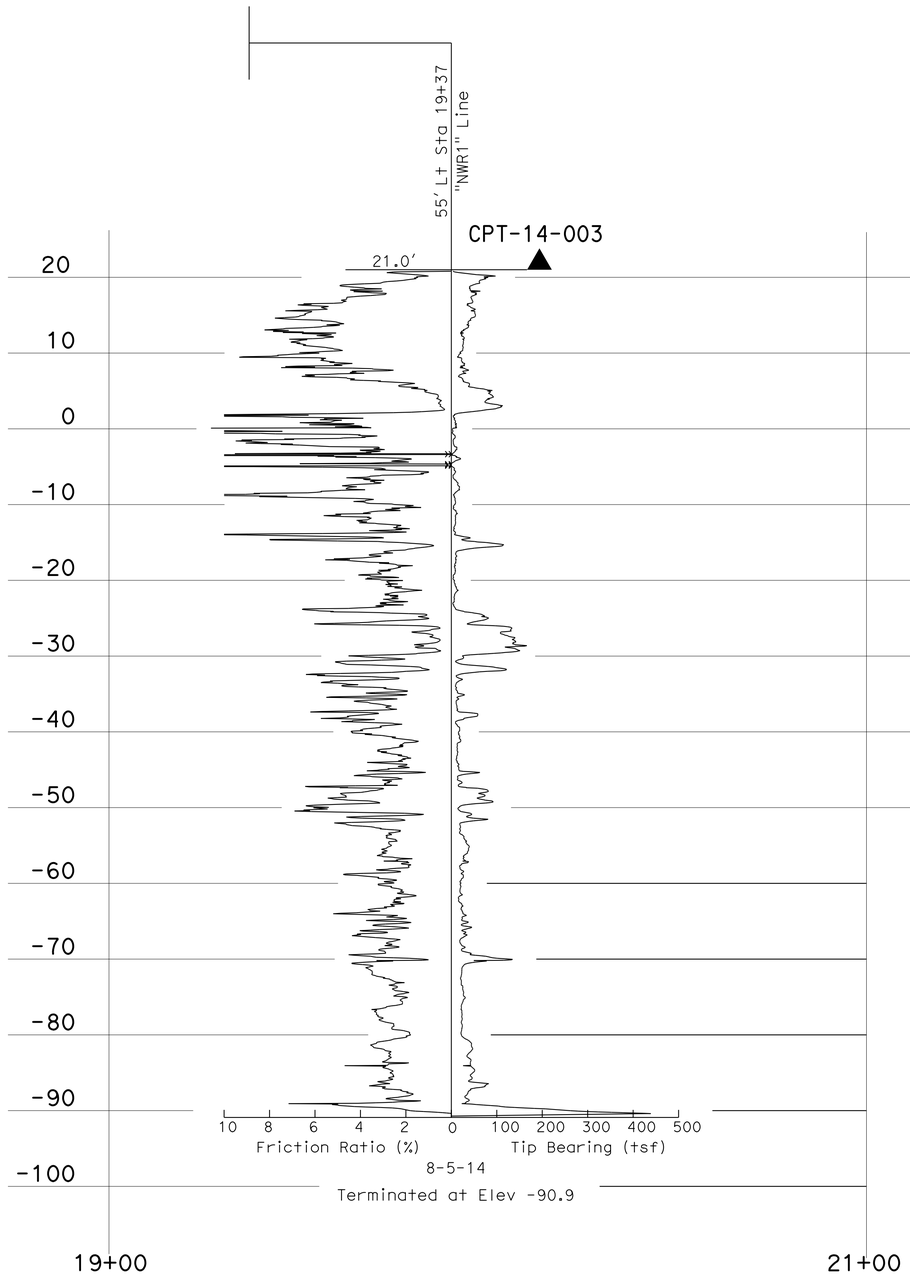

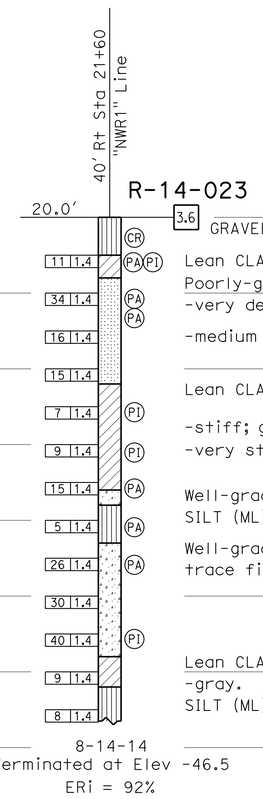

20

GRAVELLY SILT (ML); loose; grayish brown; dry; little fine, angular GRAVEL; weak cementation.

Lean CLAY (CL); stiff; yellowish brown; wet; medium plasticity.

Poorly-graded SAND (SP); dense; yellowish brown; wet; few fine GRAVEL; weak cementation. 10

-very dense.

-medium dense.

0

Lean CLAY (CL); medium stiff; grayish brown; moist; trace SAND; low plasticity; PP= 1.0 tsf.

-stiff; gray; trace coarse, angular SAND; low plasticity; PP= 1.25 tsf. -10

-very stiff; medium plasticity; PP= 3.0 tsf.

Well-graded SAND with GRAVEL (SW); medium dense; dark brown; moist; some fine angular GRAVEL.

SILT (ML); loose; gray; moist; trace medium SAND; nonplastic fines. -20

Well-graded SAND with GRAVEL (SW); dense; dark brown; moist; some coarse, rounded GRAVEL; trace fines; pockets of red SILT/CLAY. -30

Lean CLAY (CL); very stiff; yellowish brown; moist; medium plasticity; PP= 2.25 tsf. -40

-gray.

SILT (ML); medium dense; gray; moist; trace coarse SAND; nonplastic.

-50

23+00

PROFILE
Horiz: 1" = 20'
Vert: 1" = 10'

BENCH MARK

HV 12
Fnd HV-12 (unknown monument)
9.57 FT Rt "D2" LINE ROUTE 101
Sta 223+55.98
N 1,997,459.76
E 6,081,283.65
Elev = 41.97

HV 10142
Fnd WP10102 PK
1311.66 Ft Lt "D2" LINE ROUTE 101
Sta 216+59.97
N 1,998,932.13
E 6,081,532.78
Elev = 14.09

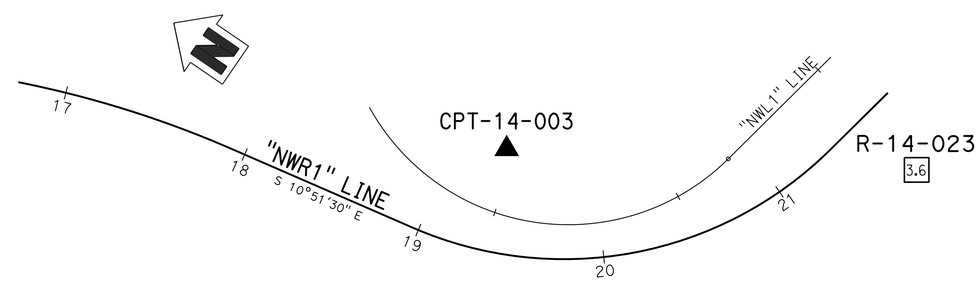

PLAN
1" = 40'

ENGINEERING SERVICES	MATERIALS AND GEOTECHNICAL SERVICES	STATE OF CALIFORNIA DEPARTMENT OF TRANSPORTATION	DIVISION OF ENGINEERING SERVICES STRUCTURE DESIGN DESIGN BRANCH 4	BRIDGE NO. 35E0051 POST MILE 1.84-1.97	ROUTE 101/ WILLOW INTERCHANGE RETAINING WALL 4 LOG OF TEST BORINGS
FUNCTIONAL SUPERVISOR NAME: C. Risden	DRAWN BY: I. G-Remmen CHECKED BY: D. Nesbitt	FIELD INVESTIGATION BY: M. Gaffney, R. Nashed			

OGS CIVIL LOG OF TEST BORINGS SHEET — ORIGINAL SCALE IN INCHES FOR REDUCED PLANS 0 1 2 3

UNIT: 3650
PROJECT NUMBER & PHASE: 04000006804 — CONTRACT NO.: 04-235654

DISREGARD PRINTS BEARING EARLIER REVISION DATES → REVISION DATES 08-25-15 10-19-15 — SHEET 19 OF 19

FILE => 35e0051-z-1tb01.dgn

USERNAME => s132175 — DATE PLOTTED => 17-AUG-2016 — TIME PLOTTED => 11:33

DIST	COUNTY	ROUTE	POST MILES TOTAL PROJECT	SHEET No.	TOTAL SHEETS
04	SM	101,114	1.3/2.5, 5.0/5.3	554	568

REGISTERED CIVIL ENGINEER 11-10-15 DATE

6-29-16
PLANS APPROVAL DATE

REGISTERED PROFESSIONAL ENGINEER LINAN WANG No. 54714 Exp. 12-31-17 CIVIL STATE OF CALIFORNIA

The State of California or its officers or agents shall not be responsible for the accuracy or completeness of scanned copies of this plan sheet.

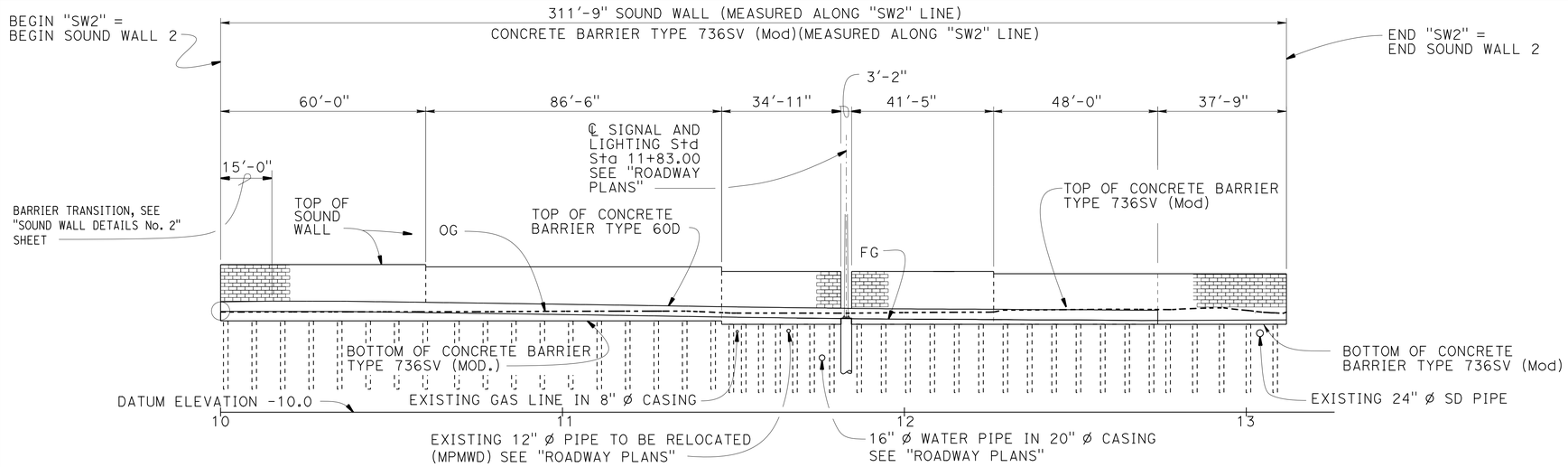

DEVELOPED ELEVATION

1" = 20'

QUANTITIES

REMOVE SOUND WALL (PORTION), LOCATION C	LUMP SUM	
REMOVE CONCRETE BARRIER (PORTION), LOCATION C	LUMP SUM	
FURNISH PILING (CLASS 90)(ALTERNATIVE Y)	1,092	LF
DRIVE PILE (CLASS 90)(ALTERNATIVE Y)	42	EA
SOUND WALL (MASONRY BLOCK)	3,474	SQFT
CONCRETE BARRIER (TYPE 60D)	274	LF
CONCRETE BARRIER (TYPE 736SV MODIFIED)	312	LF

CURVE DATA

	R	Δ	T	L
①	785'	04°11'12"	28.69'	57.36'
②	118'	47°15'24"	51.62'	97.32'
③	450'	26°55'21"	107.71'	211.45'

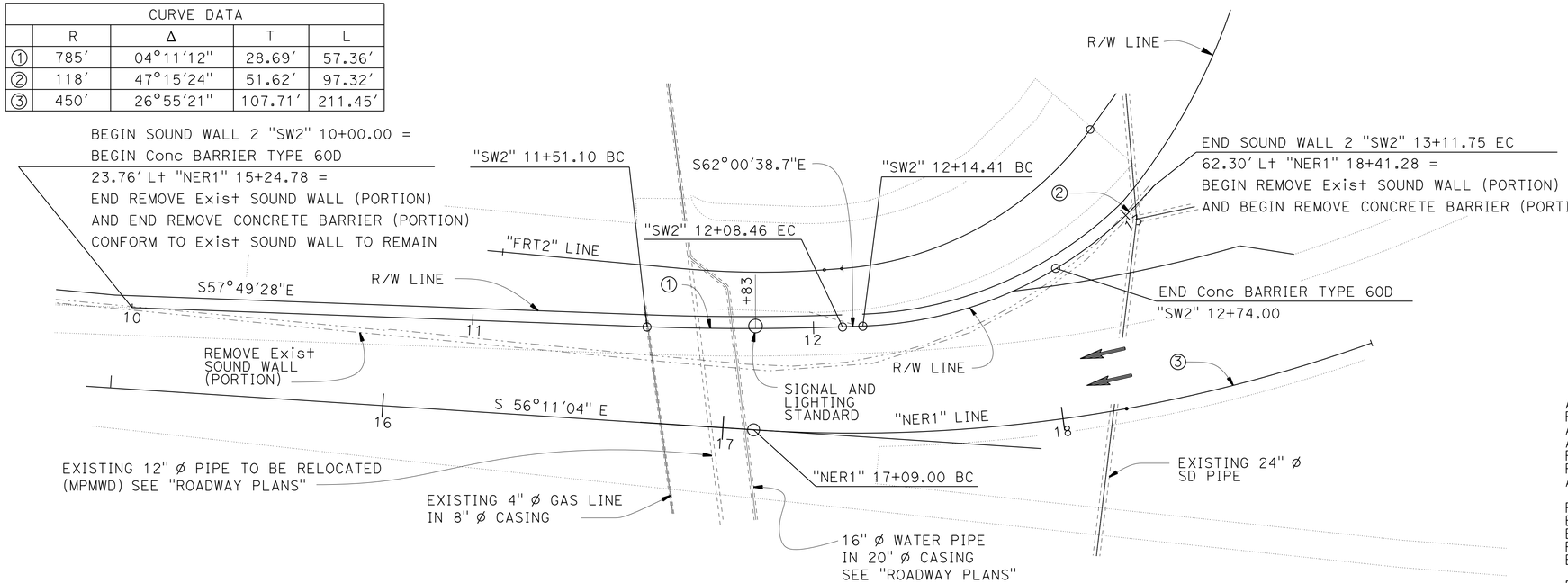

PLAN

1" = 20'

INDEX TO PLANS

SHEET NO.	TITLE
1	GENERAL PLAN NO. 1
2	GENERAL PLAN NO. 2
3	STRUCTURE PLAN NO. 1
4	STRUCTURE PLAN NO. 2
5	FOUNDATION PLAN
6	SOUND WALL DETAILS NO. 1
7	SOUND WALL DETAILS NO. 2
8	LOG OF TEST BORINGS

STANDARD PLANS 2010

A10A	ABBREVIATIONS (SHEET 1 OF 2)
RSP A10B	ABBREVIATIONS (SHEET 2 OF 2)
A10C	LINES AND SYMBOLS (SHEET 1 OF 2)
A10E	LINES AND SYMBOLS (SHEET 2 OF 2)
RSP A10F	LEGEND - SOIL (SHEET 1 OF 2)
RSP A10G	LEGEND - SOIL (SHEET 2 OF 2)
A62C	LIMITS OF PAYMENT EXCAVATION AND BACKFILL BRIDGE SURCHARGE AND WALL
RSP A76A	CONCRETE BARRIER TYPE 60
B0-3	BRIDGE DETAILS
B2-5	PILE DETAILS - CLASS 90 AND CLASS 140
RSP B11-56	CONCTRETE BARRIER TYPE 736
B15-7	SOUND WALL MASONRY BLOCK ON TYPE 736S/SV BARRIER DETAILS (2)
B15-8	SOUND WALL MASONRY BLOCK ON TYPE 736S/SV BARRIER DETAILS (3)
B15-9	SOUND WALL MASONRY BLOCK MISCELLANEOUS DETAILS

STANDARD PLAN SHEET No.

DETAIL No.

NOTE:
THE CONTRACTOR MUST VERIFY ALL CONTROLLING FIELD DIMENSIONS BEFORE ORDERING OR FABRICATING ANY MATERIAL.

ROUTE 101/ WILLOW INTERCHANGE
SOUND WALL 2
GENERAL PLAN NO. 1

Minh Ha
DESIGN ENGINEER

	BY	CHECKED
DESIGN	A. Alcantara	L. Wang
DETAILS	M. Lane	L. Wang
QUANTITIES	A. Alcantara	L. Wang

LOAD & RESISTANCE FACTOR DESIGN — LIVE LOADING: HL93 W/"LOW-BOY"; PERMIT DESIGN VEHICLE

	BY	CHECKED
LAYOUT	A. Alcantara	Linan Wang
SPECIFICATIONS	Sirisha Nelapatia	PLANS AND SPECS COMPARED Linan Wang

STATE OF CALIFORNIA
DEPARTMENT OF TRANSPORTATION

DIVISION OF ENGINEERING SERVICES
STRUCTURE DESIGN
DESIGN BRANCH 4

BRIDGE NO.
POST MILE

ORIGINAL SCALE IN INCHES FOR REDUCED PLANS 0 1 2 3

UNIT: 59-3579
PROJECT NUMBER & PHASE: 04000006804
CONTRACT NO.: 04-235654

DISREGARD PRINTS BEARING EARLIER REVISION DATES

REVISION DATES 1-8-16 1-28-16 2-16-16 11-23-15

SHEET 1 OF 8

STRUCTURES DESIGN GENERAL PLAN SHEET (ENGLISH) (REV.09-01-10)

FILE => sw2-a-gp01.dgn

USERNAME => s132775 DATE PLOTTED => 17-AUG-2016 TIME PLOTTED => 11:33

DIST	COUNTY	ROUTE	POST MILES TOTAL PROJECT	SHEET No.	TOTAL SHEETS
04	SM	101,114	1.3/2.5, 5.0/5.3	555	568

REGISTERED CIVIL ENGINEER 11-10-15 DATE

6-29-16
PLANS APPROVAL DATE

REGISTERED PROFESSIONAL ENGINEER LINAN WANG No. 54714 Exp. 12-31-17 CIVIL STATE OF CALIFORNIA

The State of California or its officers or agents shall not be responsible for the accuracy or completeness of scanned copies of this plan sheet.

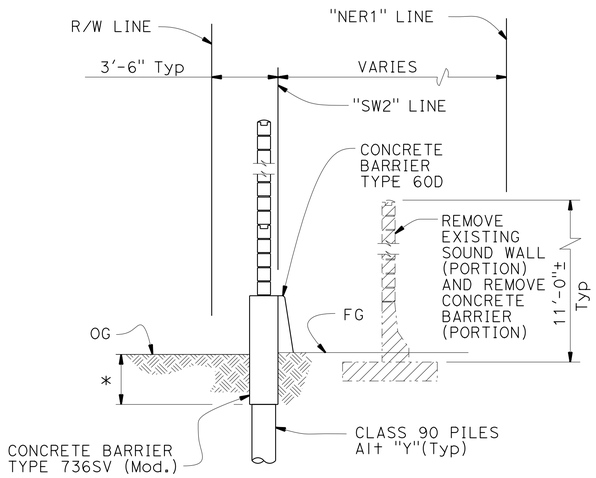

TYPICAL SECTION FROM
"SW2" 10+00.00 TO "SW2" 12+28.71
1/4"=1'-0"

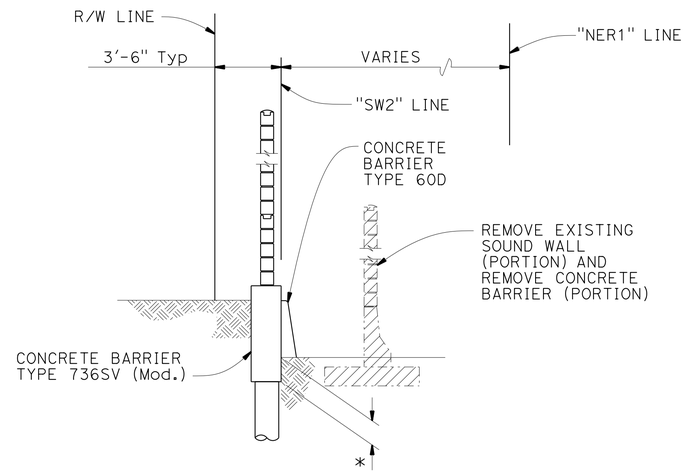

TYPICAL SECTION FROM
"SW2" 12+28.71 TO "SW2" 12+74.00
1/4"=1'-0"

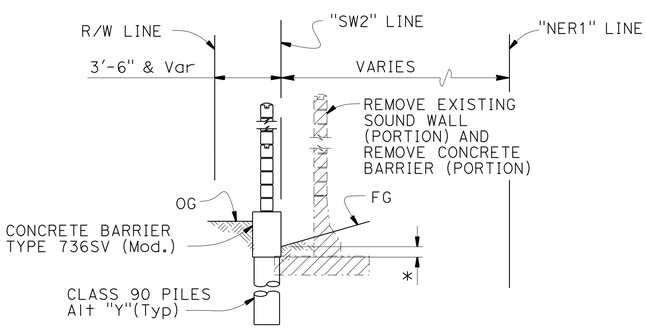

TYPICAL SECTION FROM
"SW2" 12+74.00 TO "SW2" 13+11.75
1/4"=1'-0"

NOTE
1. For Concrete Barrier Type 736SV (Mod.) Details and Sound Wall Details see "SOUND WALL DETAILS NO. 1" and "SOUND WALL DETAILS NO. 2" sheets.
2. For FG see "ROADWAY PLANS".
3. For Concrete Barrier footing and Concrete Barrier Type 736SV (Mod) details see "SOUND WALL DETAILS NO. 2" sheet.

* Indicates Design "He"

Indicates Remove Existing Sound Wall (Portion) and remove Concrete Barrier (Portion)

NOTE:
THE CONTRACTOR MUST VERIFY ALL CONTROLLING FIELD DIMENSIONS BEFORE ORDERING OR FABRICATING ANY MATERIAL.

Minh Ha
DESIGN ENGINEER

	BY	CHECKED
DESIGN	A. Alcantara	L. Wang
DETAILS	M. Lane	L. Wang
QUANTITIES	A. Alcantara	L. Wang

LOAD & RESISTANCE FACTOR DESIGN — LIVE LOADING: HL93 W/"LOW-BOY": PERMIT DESIGN VEHICLE

	BY	CHECKED
LAYOUT	A. Alcantara	Linan Wang
SPECIFICATIONS	Sirisha Nelapatia	PLANS AND SPECS COMPARED: Linan Wang

ORIGINAL SCALE IN INCHES FOR REDUCED PLANS 0 1 2 3

STATE OF CALIFORNIA
DEPARTMENT OF TRANSPORTATION

DIVISION OF ENGINEERING SERVICES
STRUCTURE DESIGN
DESIGN BRANCH 4

BRIDGE NO.
POST MILE

ROUTE 101/ WILLOW INTERCHANGE
SOUND WALL NO. 2
GENERAL PLAN NO. 2

UNIT: 59-3579
PROJECT NUMBER & PHASE: 04000006804
CONTRACT NO.: 04-235654

DISREGARD PRINTS BEARING EARLIER REVISION DATES → REVISION DATES: ~~11-04-15~~ ~~11-16-15~~ ~~11-23-15~~ 01-25-16

SHEET 2 OF 8

USERNAME => s132175 DATE PLOTTED => 17-AUG-2016 TIME PLOTTED => 11:33

STRUCTURES DESIGN GENERAL PLAN SHEET (ENGLISH) (REV.09-01-10)

FILE => sw2-a-gp02.dgn

DIST	COUNTY	ROUTE	POST MILES TOTAL PROJECT	SHEET No.	TOTAL SHEETS
04	SM	101,114	1.3/2.5, 5.0/5.3	556	568

REGISTERED CIVIL ENGINEER 11-10-15 DATE

6-29-16
PLANS APPROVAL DATE

REGISTERED PROFESSIONAL ENGINEER LINAN WANG No. 54714 Exp. 12-31-17 CIVIL STATE OF CALIFORNIA

The State of California or its officers or agents shall not be responsible for the accuracy or completeness of scanned copies of this plan sheet.

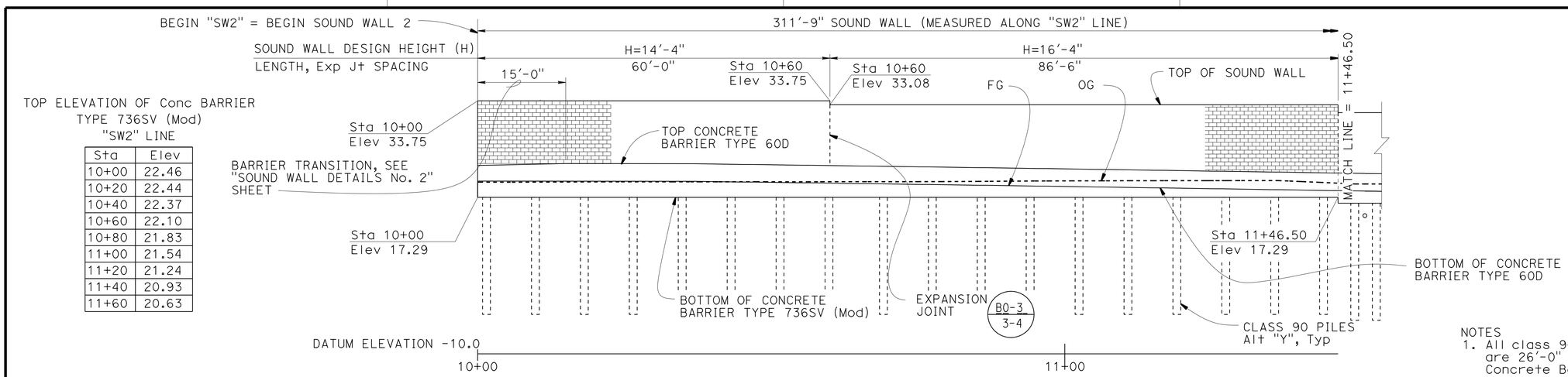

Sta	Elev
10+00	22.46
10+20	22.44
10+40	22.37
10+60	22.10
10+80	21.83
11+00	21.54
11+20	21.24
11+40	20.93
11+60	20.63

DEVELOPED ELEVATION

1" = 10'

CURVE DATA				
	R	Δ	T	L
①	785'	04°11'12"	28.69'	57.36'
②	118'	47°15'24"	51.62'	97.32'
③	450'	26°55'21"	107.71'	211.45'

NOTES

1. All class 90, Alternative "Y" Piles are 26'-0" long from bottom of Concrete Barrier Type 736SV (mOD.)
2. For FG see "ROADWAY PLANS".
3. Verify Locations and Top Elevations of all exist utility pipes before construction.
4. Locate piles 1'-6" minimum clear of existing utilities.
5. For Concrete Barrier Type 60D elevation, see ROADWAY PLANS".

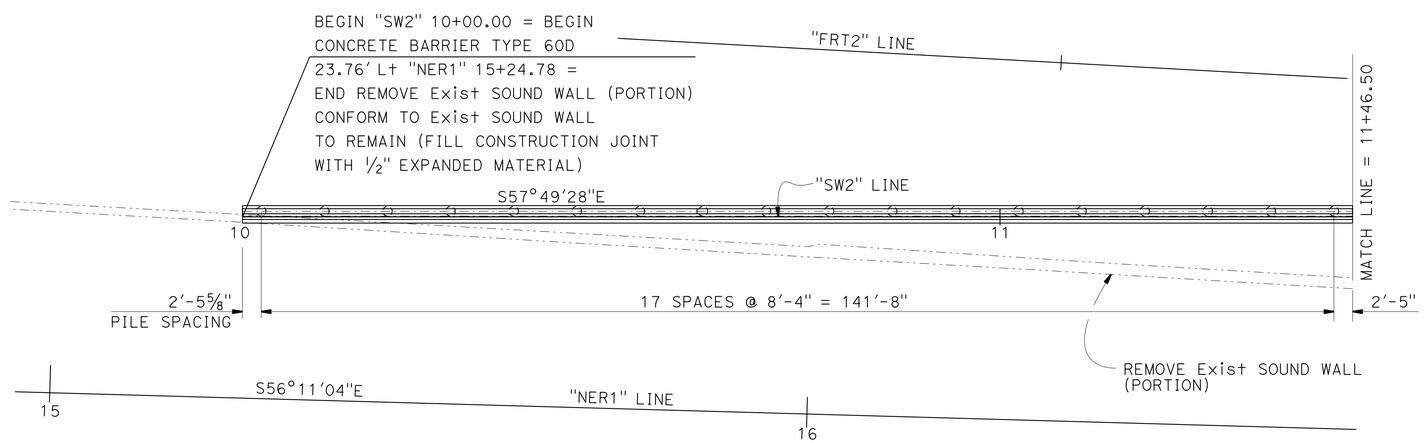

PLAN

1" = 10'

NOTE:
THE CONTRACTOR MUST VERIFY ALL CONTROLLING FIELD DIMENSIONS BEFORE ORDERING OR FABRICATING ANY MATERIAL.

	BY	CHECKED
DESIGN	A. Alcantara	L. Wang
DETAILS	M. Lane	L. Wang
QUANTITIES	A. Alcantara	L. Wang

STATE OF CALIFORNIA
DEPARTMENT OF TRANSPORTATION

DIVISION OF ENGINEERING SERVICES
STRUCTURE DESIGN
DESIGN BRANCH 4

BRIDGE NO. X
POST MILE X

ROUTE 101/ WILLOW INTERCHANGE
SOUND WALL 2
STRUCTURE PLAN NO. 1

STRUCTURES DESIGN DETAIL SHEET (ENGLISH) (REV. 09-01-10)

ORIGINAL SCALE IN INCHES FOR REDUCED PLANS 0 1 2 3

UNIT: 59-3579
PROJECT NUMBER & PHASE: 04000006804
CONTRACT NO.: 04-235654

DISREGARD PRINTS BEARING EARLIER REVISION DATES

REVISION DATES: 11-04-15 11-16-15 11-23-15 10-27-16

SHEET 3 OF 8

FILE => sw2-c-sp01.dgn

USERNAME => s132775 DATE PLOTTED => 17-AUG-2016 TIME PLOTTED => 11:33

DIST	COUNTY	ROUTE	POST MILES TOTAL PROJECT	SHEET No.	TOTAL SHEETS
04	SM	101,114	1.3/2.5, 5.0/5.3	557	568

REGISTERED CIVIL ENGINEER 11-10-15 DATE

6-29-16
PLANS APPROVAL DATE

REGISTERED PROFESSIONAL ENGINEER LINAN WANG No. 54714 Exp. 12-31-17 CIVIL STATE OF CALIFORNIA

The State of California or its officers or agents shall not be responsible for the accuracy or completeness of scanned copies of this plan sheet.

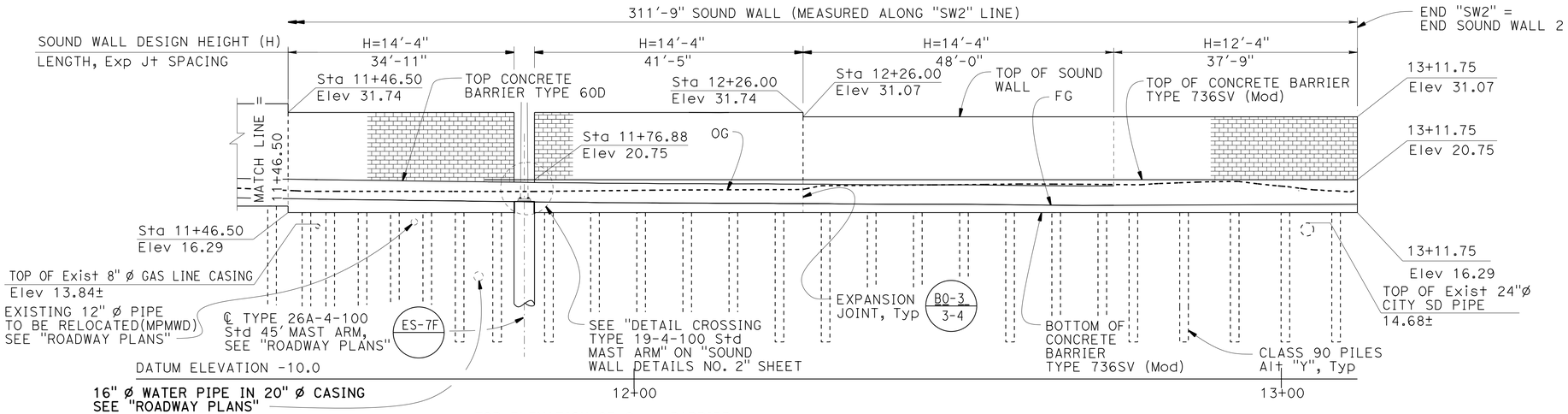

DEVELOPED ELEVATION

1" = 10'

CURVE DATA				
	R	Δ	T	L
①	785'	04°11'12"	28.69'	57.36'
②	118'	47°15'24"	51.62'	97.32'
③	450'	26°55'21"	107.71'	211.45'

TOP ELEVATION OF Conc BARRIER TYPE 736SV (Mod) "SW2" LINE

Sta	Elev
11+60	20.63
11+80	20.38
12+00	20.18
12+20	20.06
12+40	20.75
12+60	20.75
12+80	20.75
13+00	20.75
13+11.75	20.75

NOTES

1. All Class 90, Alternative "Y" Piles Are 26'-0" Long From Bottom Of Concrete Barrier Type 736SV (Mod.)
2. Verify Locations and Top Elevations of all exist utility pipes before construction.
3. Locate piles 1'-6" minimum clear of existing utilities.
4. Provide protection to adjacent piles when constructing CIDH concrete pile.
5. For FG see "ROADWAY PLANS".
6. For "SECTION A-A" see "SOUND WALL DETAILS NO. 2" sheet.

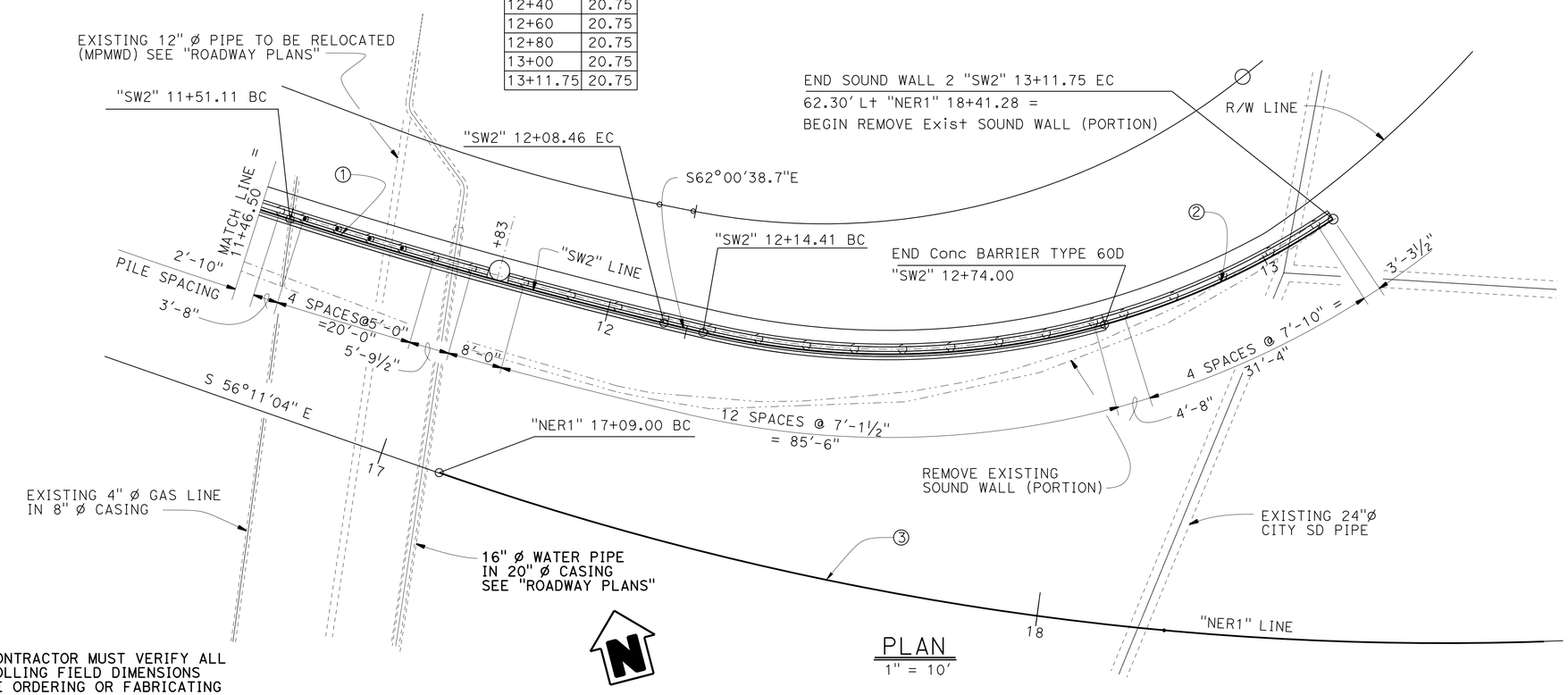

PLAN

1" = 10'

NOTE:
THE CONTRACTOR MUST VERIFY ALL CONTROLLING FIELD DIMENSIONS BEFORE ORDERING OR FABRICATING ANY MATERIAL.

ROUTE 101/ WILLOW INTERCHANGE

SOUND WALL 2

STRUCTURE PLAN NO. 2

	BY	CHECKED
DESIGN	A. Alcantara	L. Wang
DETAILS	M. Lane	L. Wang
QUANTITIES	A. Alcantara	L. Wang

STATE OF CALIFORNIA
DEPARTMENT OF TRANSPORTATION

DIVISION OF ENGINEERING SERVICES
STRUCTURE DESIGN
DESIGN BRANCH 4

BRIDGE NO. X
POST MILE X

STRUCTURES DESIGN DETAIL SHEET (ENGLISH) (REV. 09-01-10)

ORIGINAL SCALE IN INCHES FOR REDUCED PLANS 0 1 2 3

UNIT: 59-3579
PROJECT NUMBER & PHASE: 04000006804
CONTRACT NO.: 04-235654

DISREGARD PRINTS BEARING EARLIER REVISION DATES

REVISION DATES: 1-8-16 11-04-15 11-16-15 11-23-15

SHEET 4 OF 8

FILE => sw2-c-sp02.dgn

USERNAME => s132175 DATE PLOTTED => 17-AUG-2016 TIME PLOTTED => 11:33

DIST	COUNTY	ROUTE	POST MILES TOTAL PROJECT	SHEET No.	TOTAL SHEETS
04	SM	101,114	1.3/2.5, 5.0/5.3	558	568

REGISTERED CIVIL ENGINEER 11-10-15 DATE

6-29-16
PLANS APPROVAL DATE

REGISTERED PROFESSIONAL ENGINEER LINAN WANG No. 54714 Exp. 12-31-17 CIVIL STATE OF CALIFORNIA

The State of California or its officers or agents shall not be responsible for the accuracy or completeness of electronic copies of this plan sheet.

CURVE DATA

No.	R	Δ	T	L
1	96.50	102°12′40"	119.62	172.15
2	785.00	04°11′12"	28.69	57.36
3	118.00	47°15′24"	51.62	97.32
4	450.00	26°55′21"	107.71	211.45

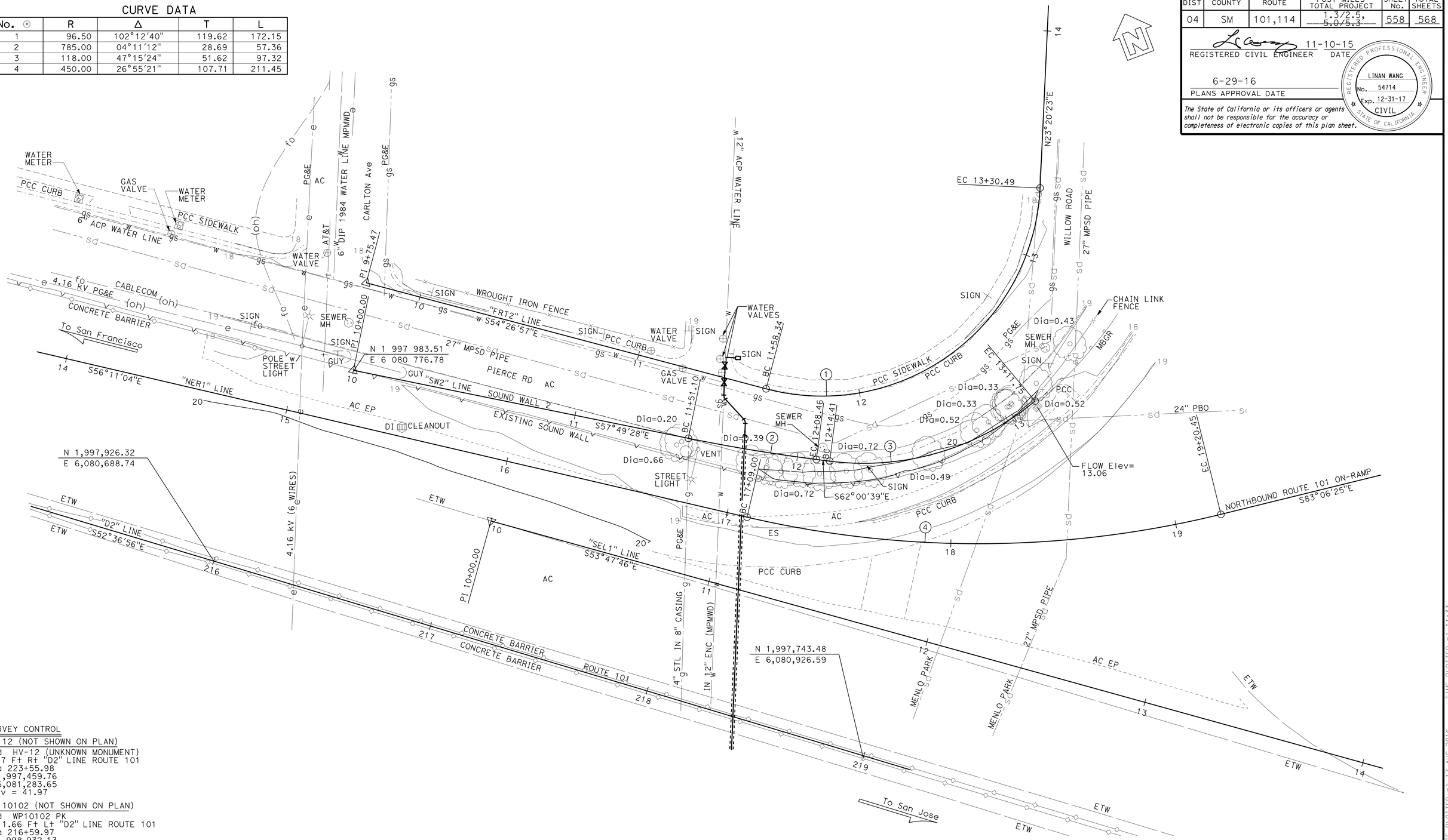

SURVEY CONTROL

HV 12 (NOT SHOWN ON PLAN)
Fnd HV-12 (UNKNOWN MONUMENT)
9.57 Ft Rt "D2" LINE ROUTE 101
Sta 223+55.98
N 1,997,459.76
E 6,081,283.65
Elev = 41.97

HV 10102 (NOT SHOWN ON PLAN)
Fnd WP10102 PK
1311.66 Ft Lt "D2" LINE ROUTE 101
Sta 216+59.97
N 1,998,932.13
E 6,081,532.78
Elev = 14.09

ROUTE 101/ WILLOW INTERCHANGE
SOUND WALL 2
FOUNDATION PLAN

PRELIMINARY INVESTIGATION SECTION

SCALE 1"=20′	VERT.DATUM NGVD29	PHOTOGRAMMETRY AS OF: X			
	HORZ.DATUM NAD83 (1991.35)	SURVEYED	BY DISTRICT	CHECKED	BY C. FASSETT 01/2015
	ALIGNMENT TIES Dist TRAVERSE SHEET	DRAFTED	BY T. ZOLNIKOV 01/2015	CHECKED	BY L. LEW 03/2015

DESIGN	BY A. Alcantara	CHECKED L. Wang
DETAILS	BY M. Lane	CHECKED L. Wang
QUANTITIES	BY A. Alcantara	CHECKED L. Wang

STATE OF CALIFORNIA
DEPARTMENT OF TRANSPORTATION

DIVISION OF ENGINEERING SERVICES
STRUCTURE DESIGN
DESIGN BRANCH 4

BRIDGE NO.
POST MILE

STRUCTURES FOUNDATION PLAN SHEET (ENGLISH) (REV. 09-01-10)

ORIGINAL SCALE IN INCHES FOR REDUCED PLANS 0 1 2 3

UNIT: 3646
PROJECT NUMBER & PHASE: 400000680 4
CONTRACT NO.: 04-235654

SUBMITTAL DATE	REVISION DATES			SHEET	OF
04/02/15	11-18-15			5	8

FILE => sw2-e-fp101.dgn

USERNAME => s132175 DATE PLOTTED => 17-AUG-2016 TIME PLOTTED => 11:33

DIST	COUNTY	ROUTE	POST MILES TOTAL PROJECT	SHEET No.	TOTAL SHEETS
04	SM	101,114	1.3/2.5, 5.0/5.3	559	568

REGISTERED CIVIL ENGINEER 11-10-15 DATE

6-29-16
PLANS APPROVAL DATE

REGISTERED PROFESSIONAL ENGINEER LINAN WANG No. 54714 Exp. 12-31-17 CIVIL STATE OF CALIFORNIA

The State of California or its officers or agents shall not be responsible for the accuracy or completeness of scanned copies of this plan sheet.

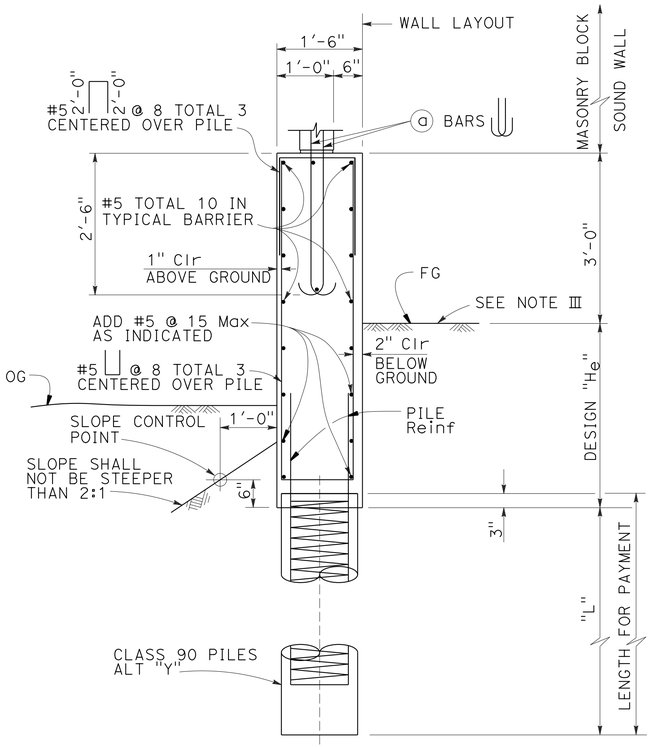

CONCRETE BARRIER TYPE 736SV (Mod) SECTION

¾"=1'-0"

Level ground ±10% at the traffic side of barrier and sloping ground on the opposite side.

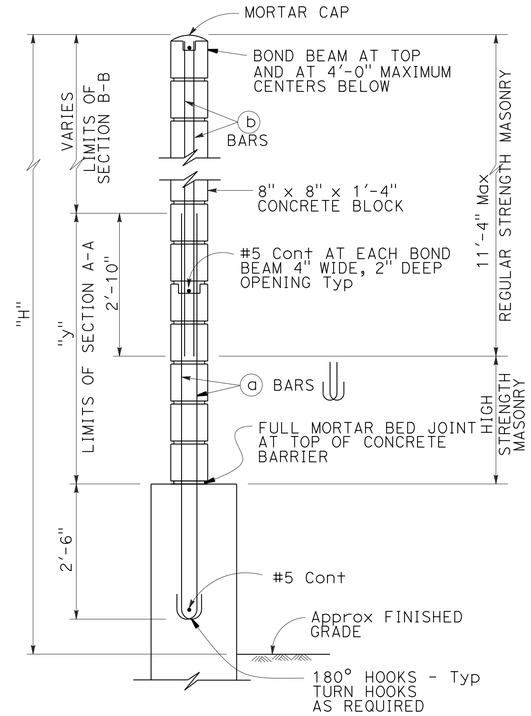

H=12'-4" THRU H=14'-4"

TYPICAL SECTION

¾"=1'-0"

See Standard Plan B15-8 for pile details.

SOUND WALL REINFORCEMENT TABLE

MAXIMUM H	(a) BARS @ 1'-4" Max	(b) BARS @ 1'-4" Max	"y"	f'm (psi)	COMPRESSIVE STRENGTH OF CMU (psi)	H
12'-4"	#5	#4	5'-0"	1500	1900	12'-4"
14'-4"	#6	#4	7'-0"	1500	1900	14'-4"
16'-4"	#6	#4	9'-0"	2500	3750	14'-4"

NOTES A THROUGH F:

A. For type of block, type of block bond, and joint finish, see other sheets.

B. When blocks are laid in stacked bond, ladder type, galvanized joint reinforcement shall be provided. A minimum of 2-9 gauge wires continuous at 4'-0" maximum to be used. Locate reinforcement in joints that are at the approximate midpoint between bond beams.

C. Horizontal joints shall be tooled concave or may be weathered. Vertical joints shall be tooled concave or may be raked.

D. For intermediate wall heights (H), that are between the values given, use the tabular information for the next higher (H).

E. Masonry strengths are listed in the "SOUND WALL REINFORCEMENT TABLE".

F. For Original Ground information see "Roadway Plans".

NOTES I THROUGH V:

I. Details shown are primarily to conform design of sound walls to Type 736S and Type 736 SV Concrete Barriers. For sound wall details conforming with barriers see Standard Plans B15-7 and B15-8.

II. For details and sections not shown, see Standard Plans B15-7 and B15-8.

III. Slope ground at traffic side of barrier to drain. Maximum slope ±10%. See Std Plan RSP B11-56, Note 3.

IV. Pile spacing see "STRUCTURE PLAN No. 1" and "STRUCTURE PLAN No. 2" sheets.

V. See Standard Plan B15-9 for other details.

DESIGN NOTES:

DESIGN

Uniform Building Code, 1997 Edition and the Bridge Design Specifications.

DESIGN WIND LOAD

27 psf

DESIGN SEISMIC LOAD

0.57 Dead load

REINFORCED CONCRETE

f'c = 3.6 ksi
fy = 60 ksi

CONCRETE MASONRY

REGULAR STRENGTH	HIGH STRENGTH	
f'm = 1500 psi	f'm = 2000 psi	f'm = 2500 psi
fb = 495 psi	fb = 660 psi	fb = 830 psi
fs = 24,000 psi	fs = 24,000 psi	fs = 24,000 psi
n = 25.8	n = 19.3	n = 15.5

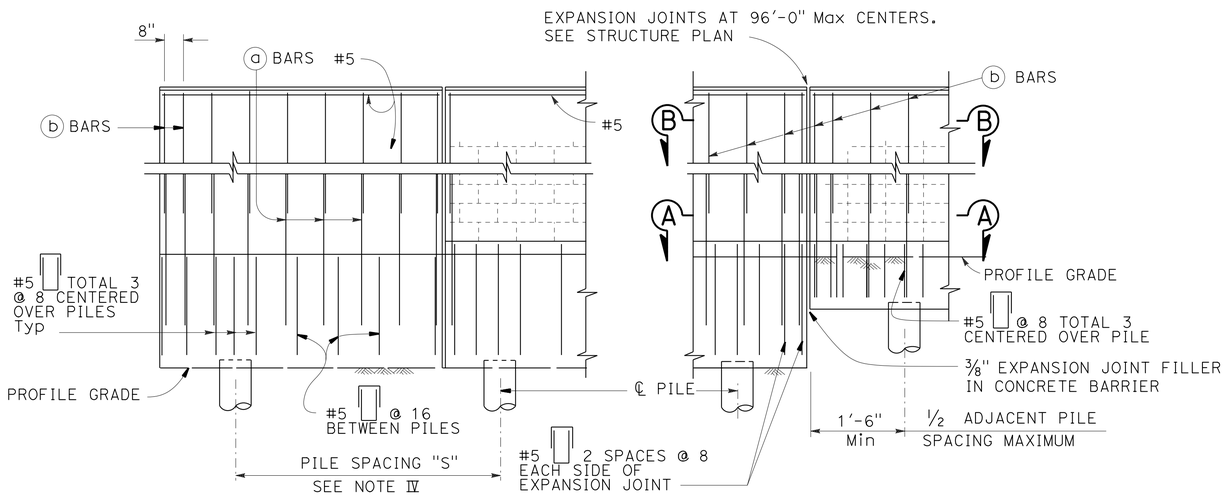

PART ELEVATION

NO SCALE

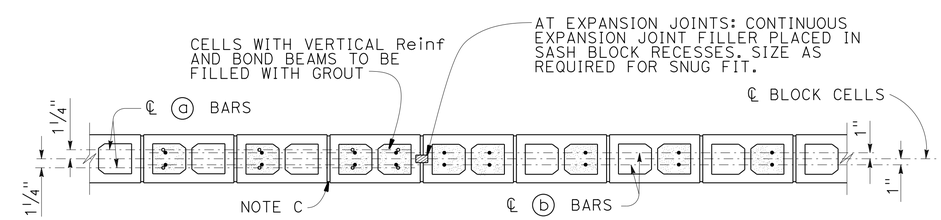

SECTION A-A

NO SCALE

SECTION B-B

NO SCALE

NOTE:

1. For Concrete Anchor Block and connection details, see "Connection Detail DD" on Revised Standard Plan RSP A77U3.

DESIGN	BY A. Alcantara	CHECKED L. Wang	
DETAILS	BY M. Lane	CHECKED L. Wang	
QUANTITIES	BY A. Alcantara	CHECKED L. Wang	

STATE OF CALIFORNIA
DEPARTMENT OF TRANSPORTATION

DIVISION OF ENGINEERING SERVICES
STRUCTURE DESIGN
DESIGN BRANCH 4

BRIDGE NO. X
POST MILE X

ROUTE 101/ WILLOW INTERCHANGE
SOUND WALL NO. 2
SOUND WALL DETAILS NO. 1

STRUCTURES DESIGN DETAIL SHEET (ENGLISH) (REV. 09-01-10)

ORIGINAL SCALE IN INCHES FOR REDUCED PLANS 0 1 2 3

UNIT: 59-3579
PROJECT NUMBER & PHASE: 04000006804
CONTRACT NO.: 04-235654

DISREGARD PRINTS BEARING EARLIER REVISION DATES

REVISION DATES 11-16-15 11-23-15 07-15-15 10-26-15

SHEET 6 OF 8

FILE => sw2-h-dets01.dgn

USERNAME => s132775 DATE PLOTTED => 17-AUG-2016 TIME PLOTTED => 11:33

DIST	COUNTY	ROUTE	POST MILES TOTAL PROJECT	SHEET No.	TOTAL SHEETS
04	SM	101,114	1.3/2.5, 5.0/5.3	560	568

REGISTERED CIVIL ENGINEER 11-10-15 DATE

6-29-16
PLANS APPROVAL DATE

REGISTERED PROFESSIONAL ENGINEER LINAN WANG No. 54714 Exp. 12-31-17 CIVIL STATE OF CALIFORNIA

The State of California or its officers or agents shall not be responsible for the accuracy or completeness of scanned copies of this plan sheet.

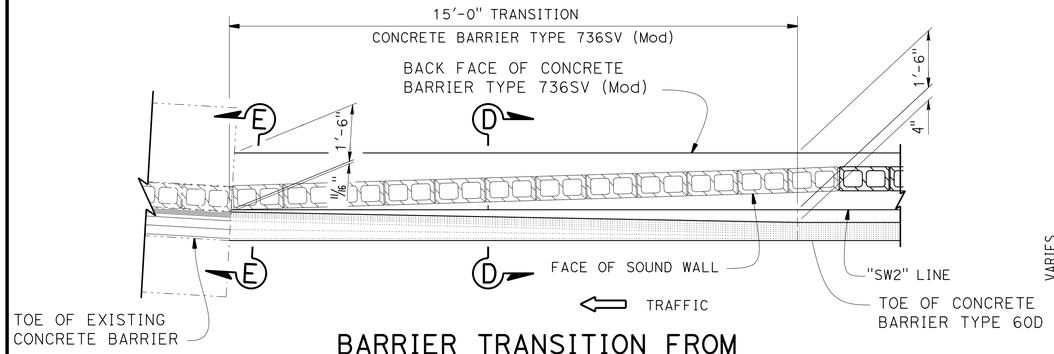

BARRIER TRANSITION FROM TYPE 60D TO EXISTING BARRIER - PART PLAN

½" = 1'-0"

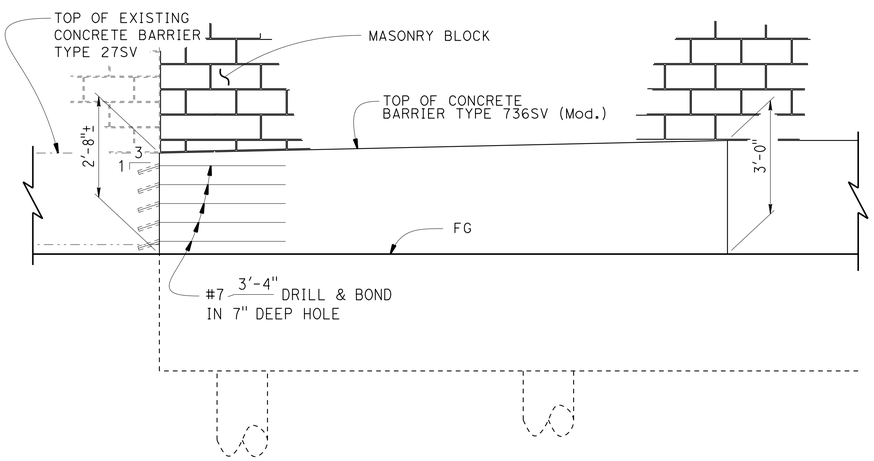

BARRIER TRANSITION FROM TYPE 60D TO EXISTING BARRIER - PART ELEVATION

½" = 1'-0"

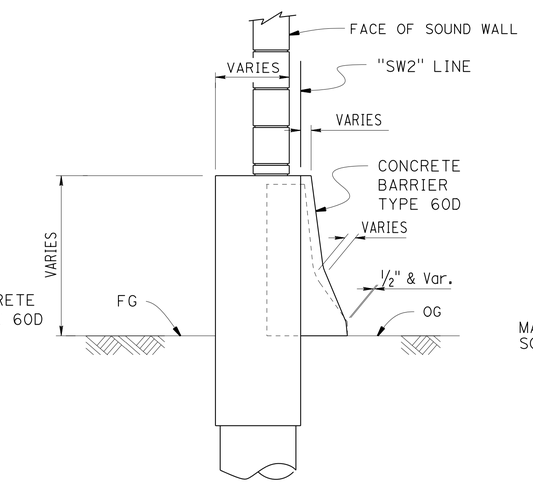

SECTION D-D

¾" = 1'-0"

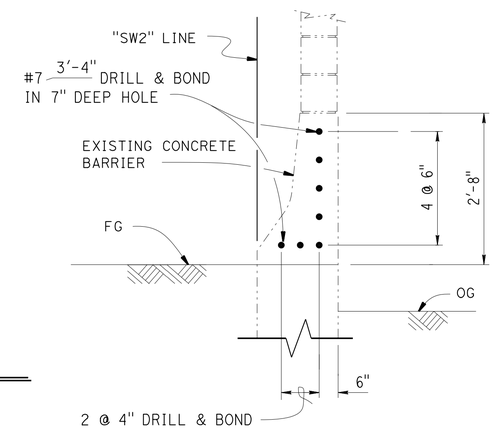

SECTION E-E

¾" = 1'-0"

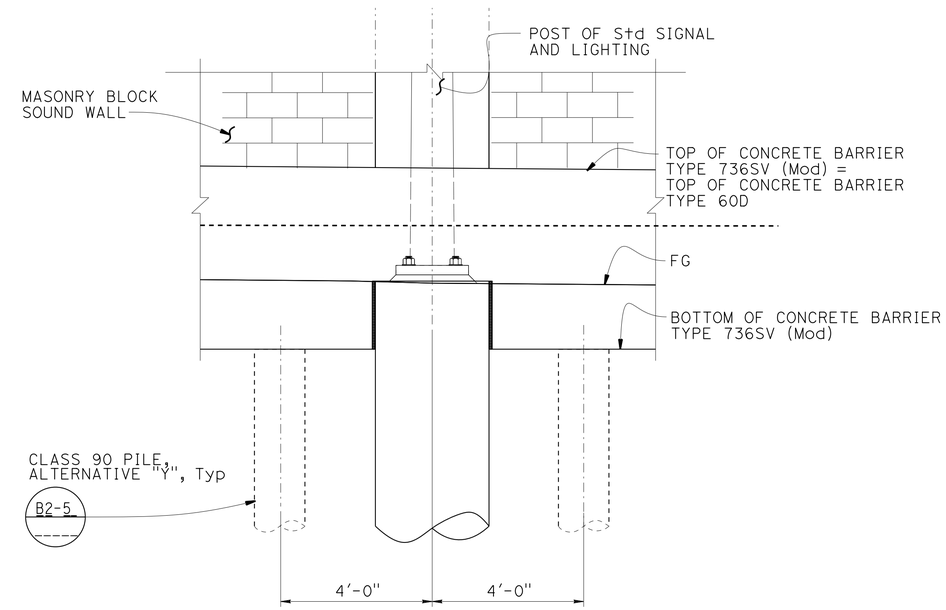

ELEVATION

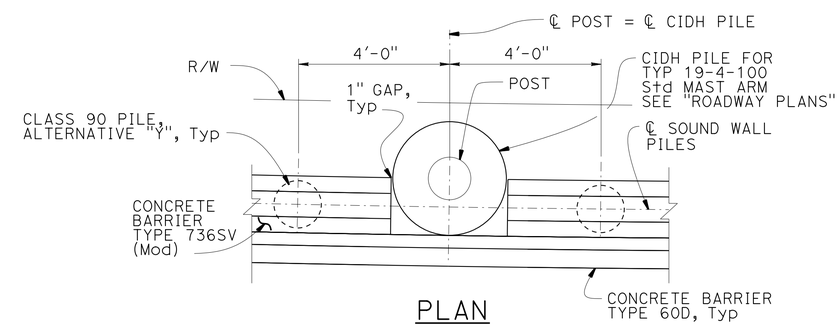

PLAN
DETAIL CROSSING
TYPE 19-4-100 Std MAST ARM

½" = 1'-0"

ROUTE 101/ WILLOW INTERCHANGE
SOUND WALL NO. 2
SOUND WALL DETAILS NO. 2

	BY	CHECKED
DESIGN	A. Alcantara	L. Wang
DETAILS	M. Lane	L. Wang
QUANTITIES	A. Alcantara	L. Wang

STATE OF CALIFORNIA
DEPARTMENT OF TRANSPORTATION

DIVISION OF ENGINEERING SERVICES
STRUCTURE DESIGN
DESIGN BRANCH 4

BRIDGE NO. X
POST MILE X

STRUCTURES DESIGN DETAIL SHEET (ENGLISH) (REV. 09-01-10)

ORIGINAL SCALE IN INCHES FOR REDUCED PLANS 0 1 2 3

UNIT: 59-3579
PROJECT NUMBER & PHASE: 04000006804
CONTRACT NO.: 04-235654

DISREGARD PRINTS BEARING EARLIER REVISION DATES

REVISION DATES: 11-16-15 11-25-15 3-25-16 11-04-16

SHEET 7 OF 8

FILE => sw2-h-dets02.dgn

USERNAME => s132775 DATE PLOTTED => 17-AUG-2016 TIME PLOTTED => 11:33

DIST	COUNTY	ROUTE	POST MILES TOTAL PROJECT	SHEET No.	TOTAL SHEETS
04	SM	101,114	1.3/2.5, 5.0/5.3	561	568

REGISTERED CIVIL ENGINEER 10-20-15 DATE

6-29-16
PLANS APPROVAL DATE

PROFESSIONAL GEOLOGIST Matthew Gaffney No. 8045 Exp. 6-30-16 STATE OF CALIFORNIA

The State of California or its officers or agents shall not be responsible for the accuracy or completeness of electronic copies of this plan sheet.

This LOTB sheet was prepared in accordance with the Caltrans Soil & Rock Logging, Classification, & Presentation Manual (2010 Edition).

See 2010 Standard Plans A10F and A10G for Soil Legend, and A10H for Rock Legend.

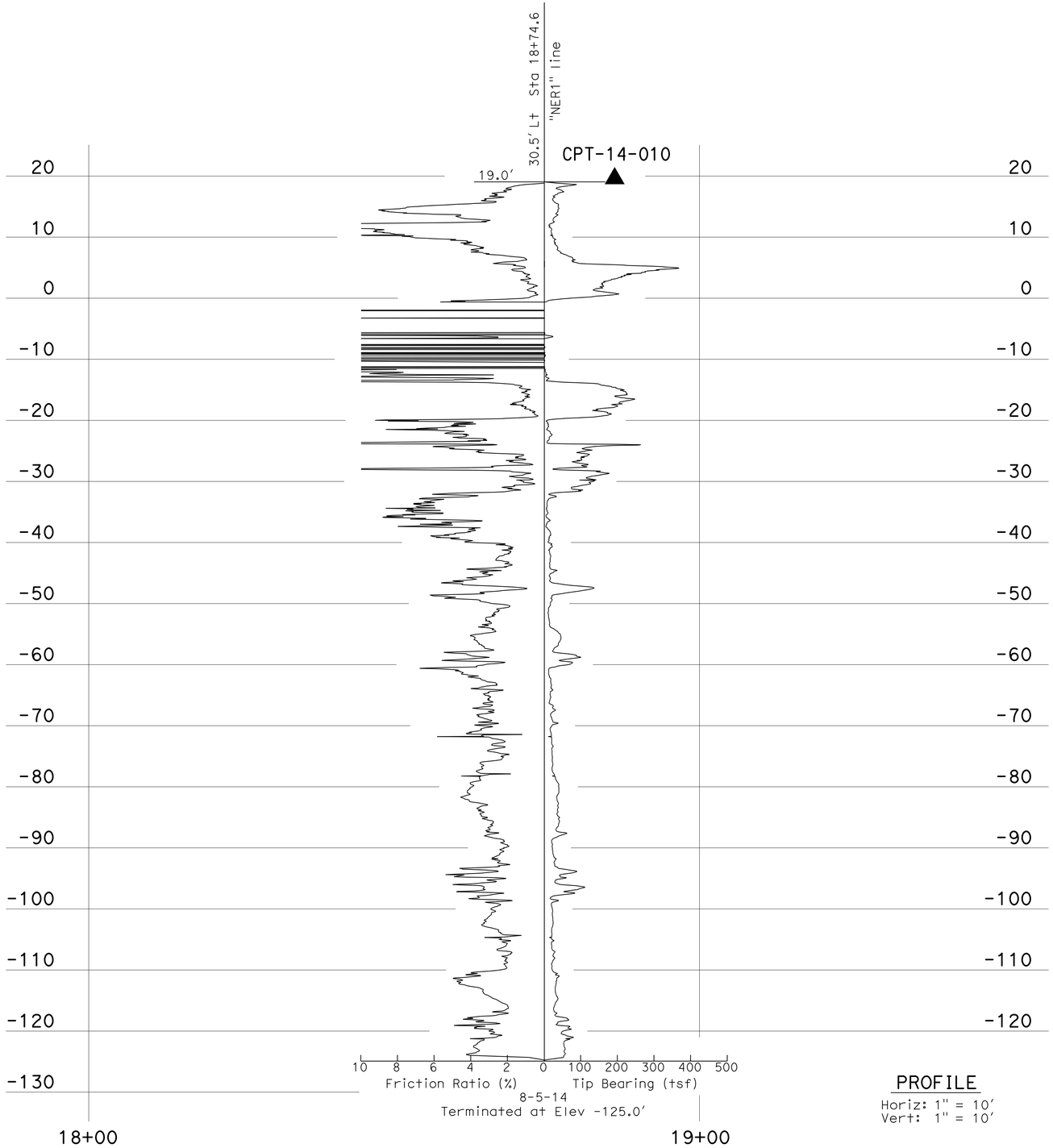

PROFILE

Horiz: 1" = 10'
Vert: 1" = 10'

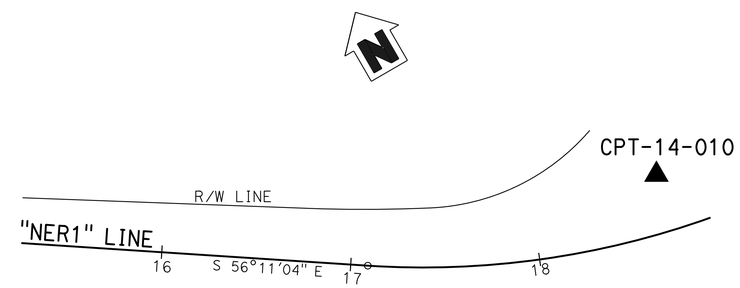

PLAN

1" = 40'

BENCH MARK

HV 12
Fnd HV-12 (unknown monument)
9.57 FT Rt "D2" LINE ROUTE 101
Sta 223+55.98
N 1,997,459.76
E 6,081,283.65
Elev = 41.97

HV 10142
Fnd WP10102 PK
1311.66 Ft Lt "D2" LINE ROUTE 101
Sta 216+59.97
N 1,998,932.13
E 6,081,532.78
Elev = 14.09

ROUTE 101/ WILLOW INTERCHANGE
SOUND WALL 2
LOG OF TEST BORINGS

ENGINEERING SERVICES	MATERIALS AND GEOTECHNICAL SERVICES	STATE OF CALIFORNIA DEPARTMENT OF TRANSPORTATION	DIVISION OF ENGINEERING SERVICES STRUCTURE DESIGN DESIGN BRANCH 4	BRIDGE NO. / POST MILE
FUNCTIONAL SUPERVISOR NAME: C. Risden	DRAWN BY: I. G-Remmen; CHECKED BY: D. Nesbitt	FIELD INVESTIGATION BY: M. Gaffney, R. Nashed		

OGS CIVIL LOG OF TEST BORINGS SHEET

ORIGINAL SCALE IN INCHES FOR REDUCED PLANS 0 1 2 3

UNIT: 59-3579
PROJECT NUMBER & PHASE: 04000006804
CONTRACT NO.: 04-235654

DISREGARD PRINTS BEARING EARLIER REVISION DATES

REVISION DATES: 08-25-15, 10-19-15

SHEET 8 OF 8

FILE => sw2-z-lltb01.dgn

USERNAME => s132775 DATE PLOTTED => 17-AUG-2016 TIME PLOTTED => 11:33

DIST	COUNTY	ROUTE	POST MILES TOTAL PROJECT	SHEET No.	TOTAL SHEETS
04	SM	101,114	1.3/2.5, 5.0/5.3	562	568

REGISTERED CIVIL ENGINEER 11-10-15 DATE

6-29-16
PLANS APPROVAL DATE

REGISTERED PROFESSIONAL ENGINEER LINAN WANG No. 54714 Exp. 12-31-17 CIVIL STATE OF CALIFORNIA

The State of California or its officers or agents shall not be responsible for the accuracy or completeness of scanned copies of this plan sheet.

SOUND WALL 4 QUANTITIES

REMOVE SOUND WALL (PORTION), LOCATION E	LUMP	SUM
FURNISH PILING (CLASS 90)(ALTERNATIVE Y)	1,040	LF
DRIVE PILE (CLASS 90)(ALTERNATIVE Y)	40	EA
SOUND WALL (MASONRY BLOCK)	2,635	SQFT
CONCRETE BARRIER (TYPE 736SV)	152	LF
CONCRETE BARRIER (TYPE 736SV MODIFIED)	47	LF

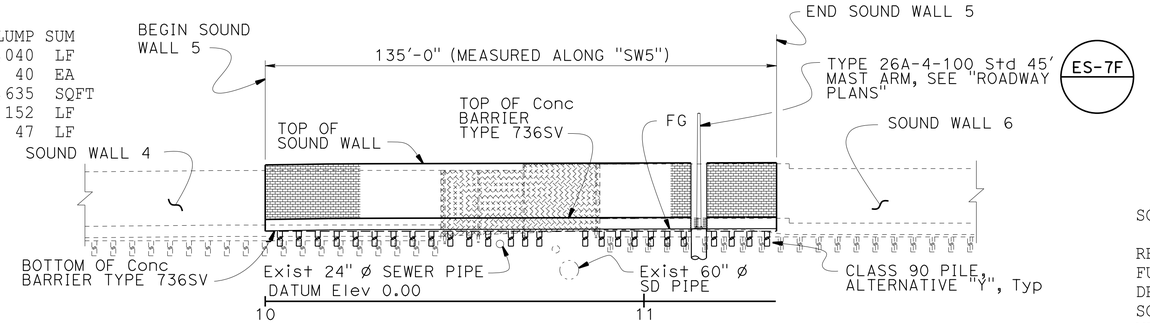

ELEVATION SOUND WALL 5

SOUND WALL 5 QUANTITIES

REMOVE SOUND WALL (LS)	LUMP	SUM
FURNISH PILING (CLASS 90)(ALTERNATIVE Y)	676	LF
DRIVE PILE (CLASS 90)(ALTERNATIVE Y)	26	EA
SOUND WALL (MASONRY BLOCK)	1,747	SQFT
MISCELLANEOUS METAL (BRIDGE)	311	LB
CONCRETE BARRIER (TYPE 736SV)	131	LF

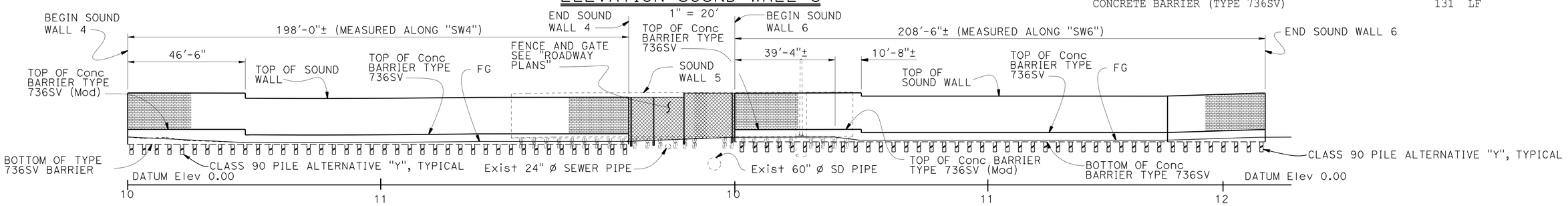

ELEVATION SOUND WALL 4

1" = 20'

ELEVATION SOUND WALL 6

1" = 20'

INDEX TO PLANS

SHEET NO.	TITLE
1	GENERAL PLAN NO. 1
2	GENERAL PLAN NO. 2
3	STRUCTURE PLAN NO. 1
4	STRUCTURE PLAN NO. 2
5	STRUCTURE PLAN NO. 3
6	FOUNDATION PLAN
7	LOG OF TEST BORINGS

STANDARD PLANS 2010

A10A	ABBREVIATIONS (SHEET 1 OF 2)
RSP A10B	ABBREVIATIONS (SHEET 2 OF 2)
A10C	LINES AND SYMBOLS (SHEET 1 OF 2)
A10E	LINES AND SYMBOLS (SHEET 2 OF 2)
B2-5	PILE DETAILS - CLASS 90 AND CLASS 140
B15-3	SOUND WALL MASONRY BLOCK ON PILE CAP DETAILS (1)
B15-4	SOUND WALL MASONRY BLOCK ON PILE CAP DETAILS (2)
RSP B15-6	SOUND WALL MASONRY BLOCK ON TYPE 736S/SV BARRIER DETAILS (1)
RSP B15-7	SOUND WALL MASONRY BLOCK ON TYPE 736S/SV BARRIER DETAILS (2)
B15-15	SOUND WALL MASONRY BLOCK ON TYPE 736S/SV BARRIER ON PILE FOOTING FOR SPANNING UTILITIES
ES-7F	ELECTRICAL SYSTEMS (SIGNAL AND LIGHTING SYANDARD - CASE 4 SIGNAL MAST ARM LOADING, WIND VELOCITY = 100 MPH AND SIGNAL MAST ARM LENGTHS 25' TO 45')

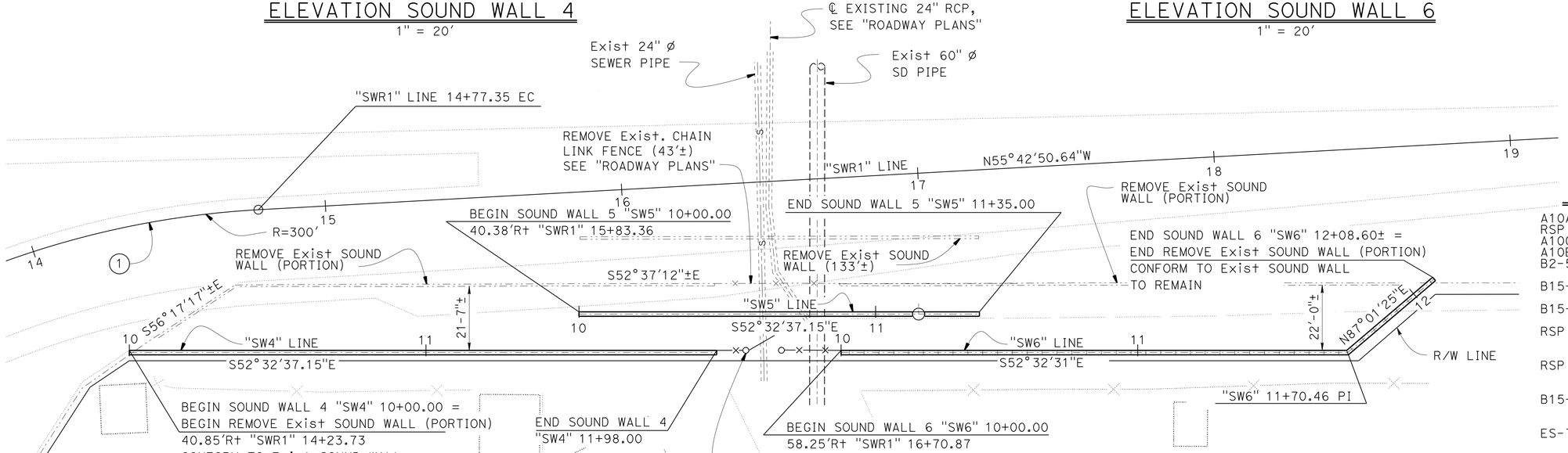

CURVE DATA

CURVE	R	Δ	T	L
1	300.00'	22°52'01"	60.67'	119.73'

PLAN

1" = 20'

SOUND WALL 6 QUANTITIES

REMOVE SOUND WALL (PORTION), LOCATION F	LUMP	SUM
FURNISH PILING (CLASS 90)(ALTERNATIVE Y)	1,092	LF
DRIVE PILE (CLASS 90)(ALTERNATIVE Y)	42	EA
SOUND WALL (MASONRY BLOCK)	2,711	SQFT
CONCRETE BARRIER (TYPE 736SV)	198	LF
CONCRETE BARRIER (TYPE 736SV MODIFIED)	11	LF

STANDARD PLAN SHEET No.

DETAIL No.

NOTE:
THE CONTRACTOR MUST VERIFY ALL CONTROLLING FIELD DIMENSIONS BEFORE ORDERING OR FABRICATING ANY MATERIAL.

ROUTE 101/ WILLOW INTERCHANGE

SOUND WALL 4, 5 & 6

GENERAL PLAN NO. 1

Minh Ha
DESIGN ENGINEER

	BY	CHECKED
DESIGN	Linan Wang	Li Barnard
DETAILS	M. Lane/A. Onodera	Li Barnard
QUANTITIES	Linan Wang	Qi Zhao

LOAD & RESISTANCE FACTOR DESIGN — LIVE LOADING: HL93 W/"LOW-BOY": PERMIT DESIGN VEHICLE

	BY	CHECKED
LAYOUT	Linan Wang	Qi Zhao
SPECIFICATIONS	Sirisha Nelapatia	PLANS AND SPECS COMPARED Linan Wang

ORIGINAL SCALE IN INCHES FOR REDUCED PLANS 0 1 2 3

STATE OF CALIFORNIA
DEPARTMENT OF TRANSPORTATION

DIVISION OF ENGINEERING SERVICES
STRUCTURE DESIGN
DESIGN BRANCH 4

BRIDGE NO.
POST MILE

UNIT: 59-3579
PROJECT NUMBER & PHASE: 04000006804
CONTRACT NO.: 04-235654

DISREGARD PRINTS BEARING EARLIER REVISION DATES

REVISION DATES 11-13-15 09-22-15 10-06-15 11-30-15

SHEET 1 OF 7

STRUCTURES DESIGN GENERAL PLAN SHEET (ENGLISH) (REV.09-01-10)

FILE => sw4-a-gp01.dgn

USERNAME => s132775 DATE PLOTTED => 17-AUG-2016 TIME PLOTTED => 11:33

DIST	COUNTY	ROUTE	POST MILES TOTAL PROJECT	SHEET No.	TOTAL SHEETS
04	SM	101,114	1.3/2.5, 5.0/5.3	563	568

REGISTERED CIVIL ENGINEER 11-10-15 DATE

6-29-16
PLANS APPROVAL DATE

REGISTERED PROFESSIONAL ENGINEER LINAN WANG No. 54714 Exp. 12-31-17 CIVIL STATE OF CALIFORNIA

The State of California or its officers or agents shall not be responsible for the accuracy or completeness of scanned copies of this plan sheet.

NOTE
For FG see "ROADWAY PLANS"

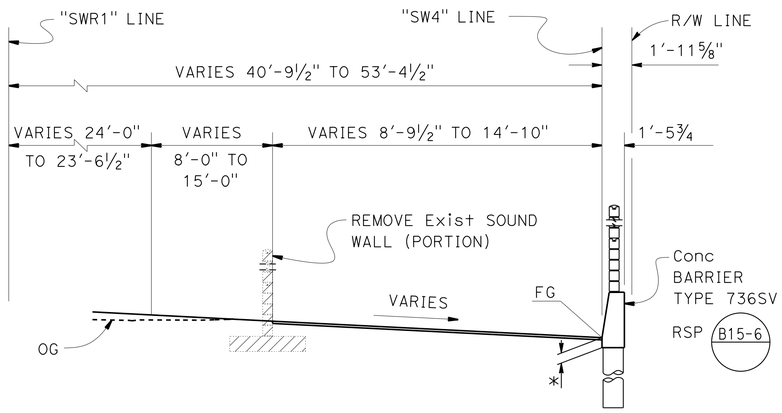

("SWR1" LINE Sta 14+77.72 TO Sta 15+83.36)
TYPICAL SECTION
1" = 5'-0"

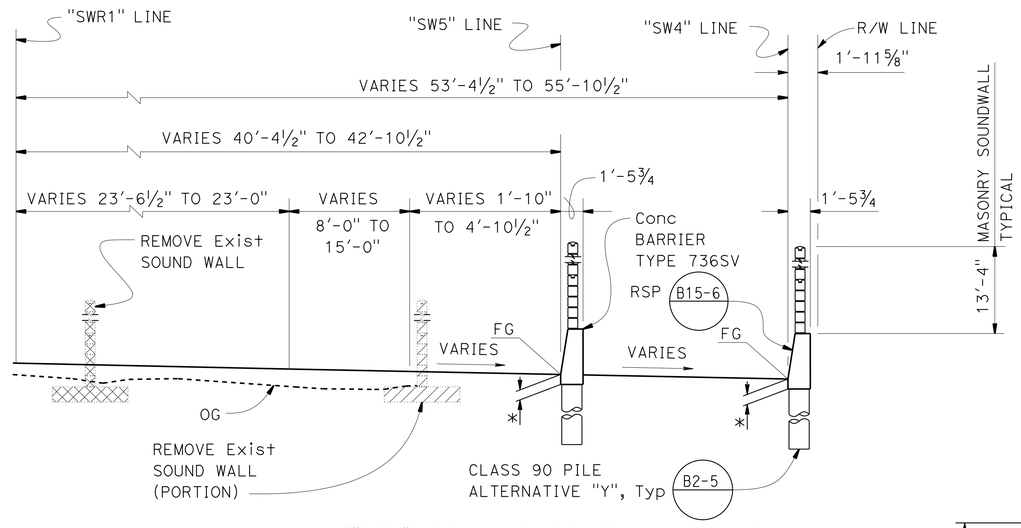

("SWR1" LINE Sta 15+83.36 TO Sta 16+28.49)
TYPICAL SECTION
1" = 5'-0"

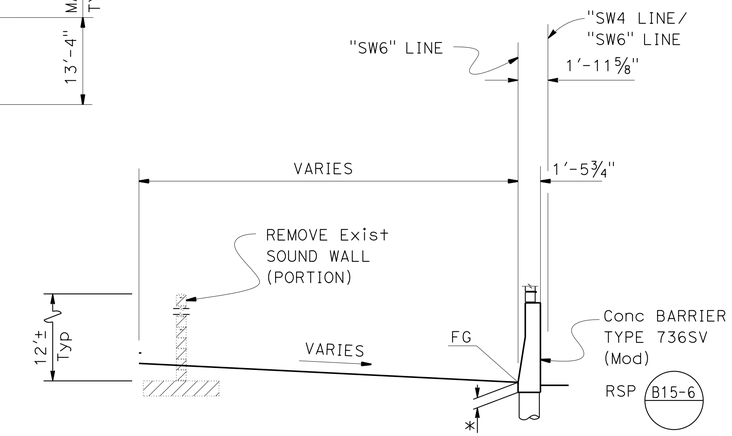

("SWR1" LINE Sta 14+23.73 TO Sta 14+77.72 - SOUND WALL 4)
("SWR1" LINE Sta 17+10.14 TO Sta 17+20.79 - SOUND WALL 6)
TYPICAL SECTION
1" = 5'-0"

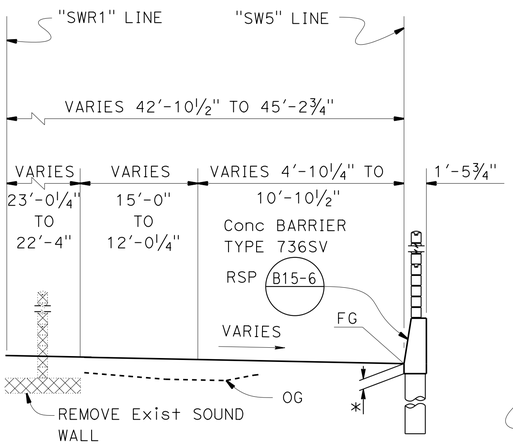

("SWR1" LINE Sta 16+28.49 TO Sta 16+70.76)
TYPICAL SECTION
1" = 5'-0"

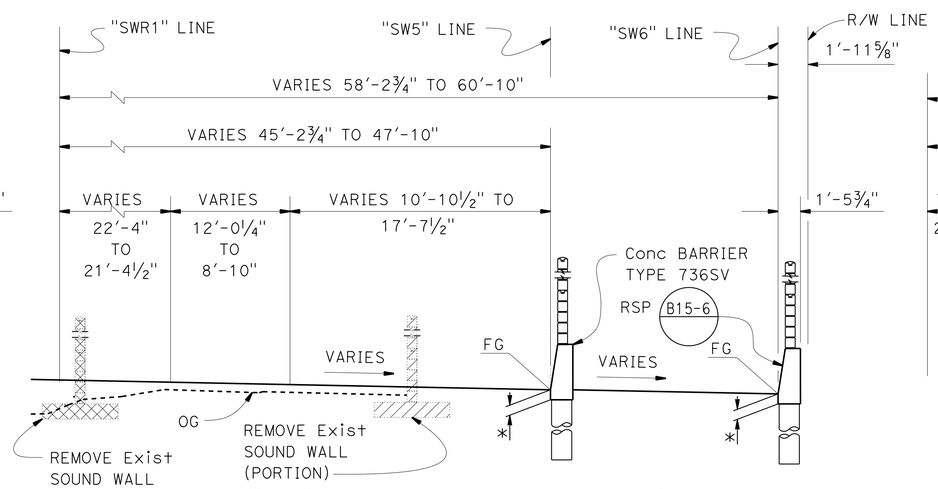

("SWR1" LINE Sta 16+70.76 TO Sta 17+17.95)
TYPICAL SECTION
1" = 5'-0"

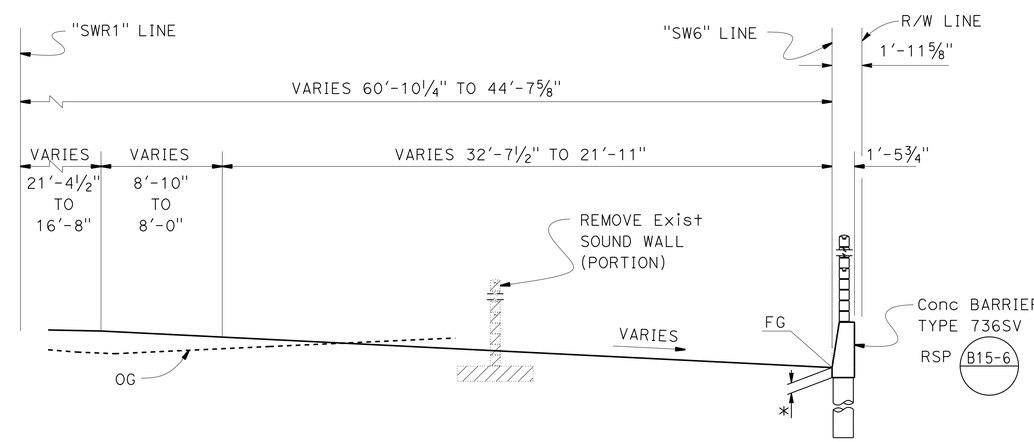

("SWR1" LINE Sta 17+17.95 TO Sta 18+71.31)
TYPICAL SECTION
1" = 5'-0"

LEGEND
Indicates Remove Exist Sound Wall (Portion)
Indicates Remove Exist Sound Wall
* Design "H_e"

NOTE:
THE CONTRACTOR MUST VERIFY ALL CONTROLLING FIELD DIMENSIONS BEFORE ORDERING OR FABRICATING ANY MATERIAL.

Minh Ha, DESIGN ENGINEER	DESIGN	BY Linan Wang	CHECKED Li Barnard	LOAD & RESISTANCE FACTOR DESIGN	LIVE LOADING: HL93 W/"LOW-BOY": PERMIT DESIGN VEHICLE
	DETAILS	BY M. Lane	CHECKED Li Barnard	LAYOUT: BY Linan Wang	CHECKED Qi Zhao
	QUANTITIES	BY Linan Wang	CHECKED Qi Zhao	SPECIFICATIONS: BY Sirisha Nelapatia	PLANS AND SPECS COMPARED Linan Wang

ORIGINAL SCALE IN INCHES FOR REDUCED PLANS 0 1 2 3

STATE OF CALIFORNIA
DEPARTMENT OF TRANSPORTATION

DIVISION OF ENGINEERING SERVICES
STRUCTURE DESIGN
DESIGN BRANCH 4

BRIDGE NO.
POST MILE

UNIT: 59-3579
PROJECT NUMBER & PHASE: 04000006804
CONTRACT NO.: 04-235654

DISREGARD PRINTS BEARING EARLIER REVISION DATES
REVISION DATES: 11-05-15 11-17-15 7-14-15 08-06-15
SHEET 2 OF 7

ROUTE 101/ WILLOW INTERCHANGE
SOUND WALL 4, 5 & 6
GENERAL PLAN NO. 2

USERNAME => s132175 DATE PLOTTED => 17-AUG-2016 TIME PLOTTED => 11:33

STRUCTURES DESIGN GENERAL PLAN SHEET (ENGLISH) (REV.09-01-10)

FILE => sw4-a-gp02.dgn

DIST	COUNTY	ROUTE	POST MILES TOTAL PROJECT	SHEET No.	TOTAL SHEETS
04	SM	101,114	1.3/2.5, 5.0/5.3	564	568

REGISTERED CIVIL ENGINEER 11-10-15 DATE

6-29-16
PLANS APPROVAL DATE

REGISTERED PROFESSIONAL ENGINEER LINAN WANG No. 54714 Exp. 12-31-17 CIVIL STATE OF CALIFORNIA

The State of California or its officers or agents shall not be responsible for the accuracy or completeness of scanned copies of this plan sheet.

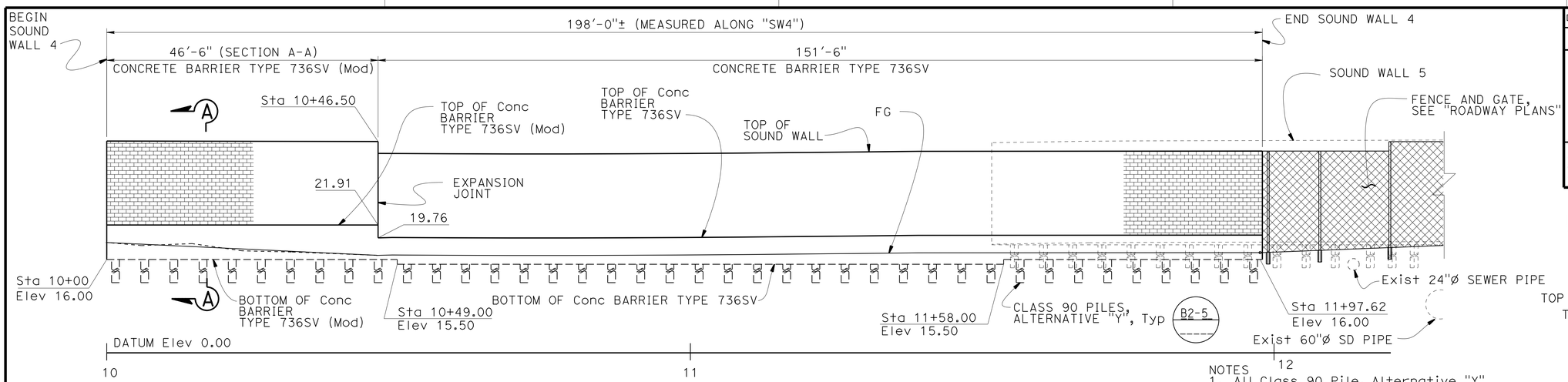

ELEVATION SOUND WALL 4

1" = 10'

RSP B15-6 RSP B11-7

NOTE
For FG see "ROADWAY PLANS"

NOTES
1. All Class 90 Pile, Alternative "Y" shall be 26'-0" long below bottom of Type 736SV Barrier.
2. The clear distance between existing utility pipe to piles shall be 1'-0" min. Adjust piles as needed.
3. Verify the locations and top elevations of all existing utility pipes before construction.

TOP ELEVATION OF Conc BARRIER TYPE 736SV (Mod) & 736SV "SW4" LINE

Sta	Elev
10+00	21.91
10+25	21.91
10+46.50	21.91
10+50	19.76
10+75	19.69
11+00	19.78
11+25	19.99
11+50	20.15
11+75	20.16
11+97.62	20.18

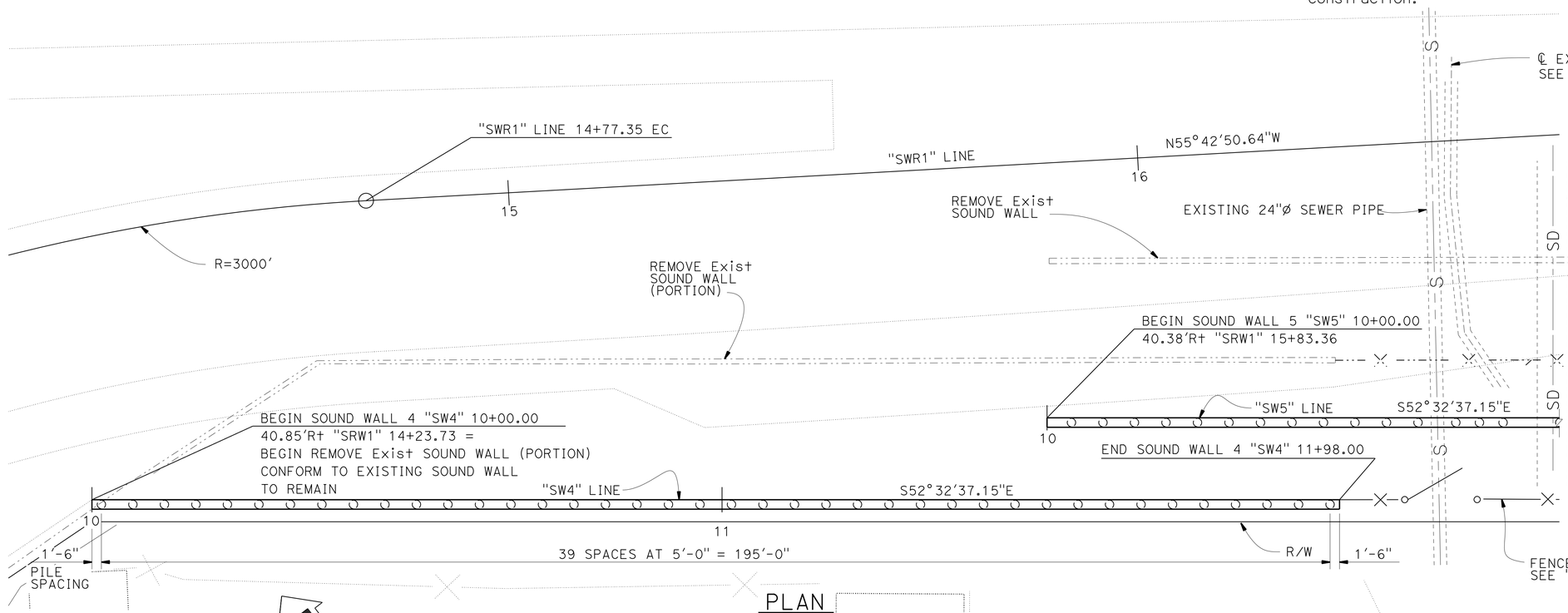

PLAN

1" = 10'

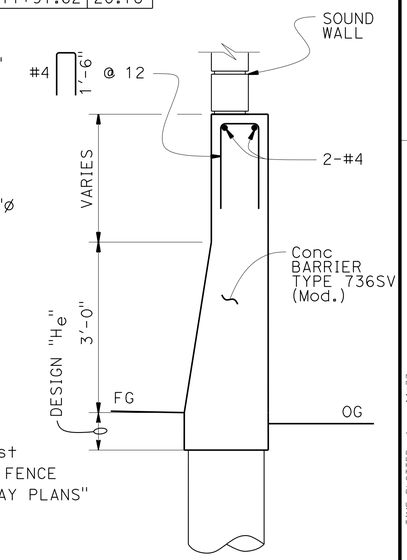

SECTION A-A

3/4" = 1'-0"
"SW4" Sta. 10+00 TO Sta. 10+46.50
"SW6" Sta. 10+39.33 TO Sta. 10+50.00

Reinforcement shown is in addition to the reinforcement in Conc Barrier Type 736SV

NOTE:
THE CONTRACTOR MUST VERIFY ALL CONTROLLING FIELD DIMENSIONS BEFORE ORDERING OR FABRICATING ANY MATERIAL.

ROUTE 101/ WILLOW INTERCHANGE
SOUND WALL 4, 5 & 6
STRUCTURE PLAN NO 1

	BY	CHECKED
DESIGN	L. Wang	Li Barnard
DETAILS	M. Lane	Li Barnard
QUANTITIES	Linan Wang	Qi Zhao

STATE OF CALIFORNIA
DEPARTMENT OF TRANSPORTATION

DIVISION OF ENGINEERING SERVICES
STRUCTURE DESIGN
DESIGN BRANCH 4

BRIDGE NO. X
POST MILE X

STRUCTURES DESIGN DETAIL SHEET (ENGLISH) (REV. 09-01-10)

ORIGINAL SCALE IN INCHES FOR REDUCED PLANS 0 1 2 3

UNIT: 59-3579
PROJECT NUMBER & PHASE: 04000006804
CONTRACT NO.: 04-235654

DISREGARD PRINTS BEARING EARLIER REVISION DATES

REVISION DATES 09-18-15 09-28-15 11-20-15 11-17-15

SHEET 3 OF 7

FILE => sw4-c-sp01.dgn

USERNAME => s132775 DATE PLOTTED => 17-AUG-2016 TIME PLOTTED => 11:33

DIST	COUNTY	ROUTE	POST MILES TOTAL PROJECT	SHEET No.	TOTAL SHEETS
04	SM	101,114	1.3/2.5, 5.0/5.3	565	568

REGISTERED CIVIL ENGINEER 11-10-15 DATE

6-29-16
PLANS APPROVAL DATE

REGISTERED PROFESSIONAL ENGINEER LINAN WANG No. 54714 Exp. 12-31-17 CIVIL STATE OF CALIFORNIA

The State of California or its officers or agents shall not be responsible for the accuracy or completeness of scanned copies of this plan sheet.

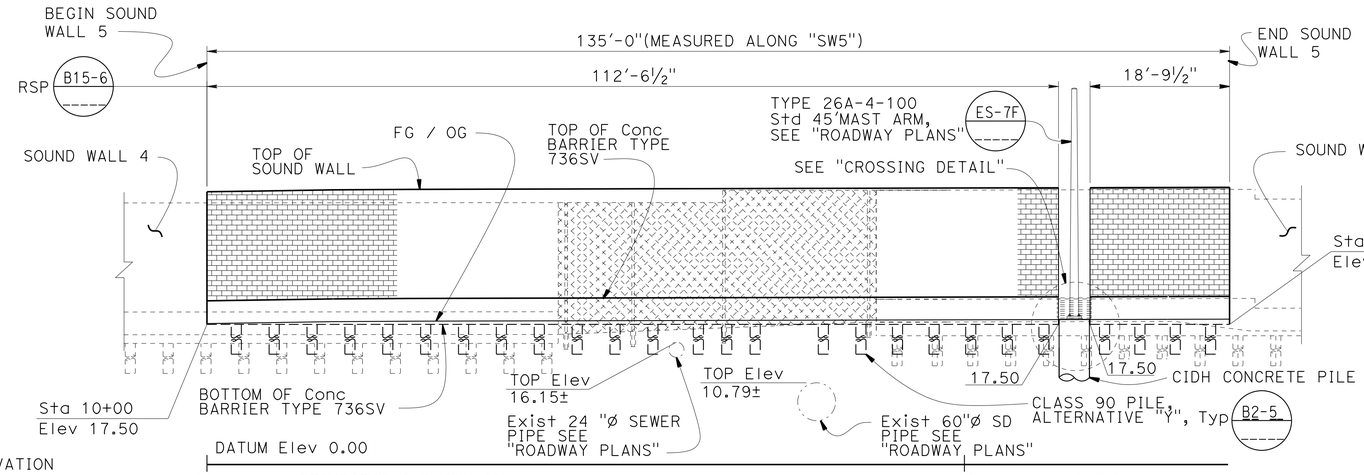

ELEVATION SOUND WALL 5

NO SCALE

RSP B15-6

TOP OF BARRIER ELEVATION "SW5" LINE

Sta	Elev
10+00	21.61
10+25	21.91
10+50	21.98
10+75	22.04
11+00	22.11
11+25	22.16
11+34.80	22.19

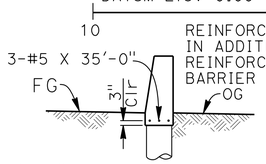

REINFORCING SHOWN IS IN ADDITION TO THE REINFORCING IN CONCRETE BARRIER TYPE 736SV

"SW5" Sta 10+50 TO Sta 10+85

SECTION

¼"=1'-0"

NOTES

1. All Class 90 Pile, Alternative "Y" shall be 26'-0" long below bottom of Type 736SV Barrier.
2. The clear distance between existing utility pipe to piles shall be 1'-0" min. Adjust piles as needed.
3. Verify the locations and top elevations of all existing utility pipes before construction.

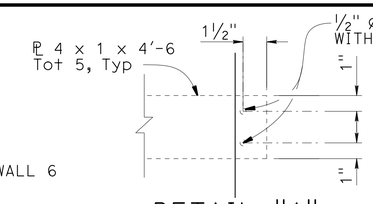

DETAIL "A"

NO SCALE

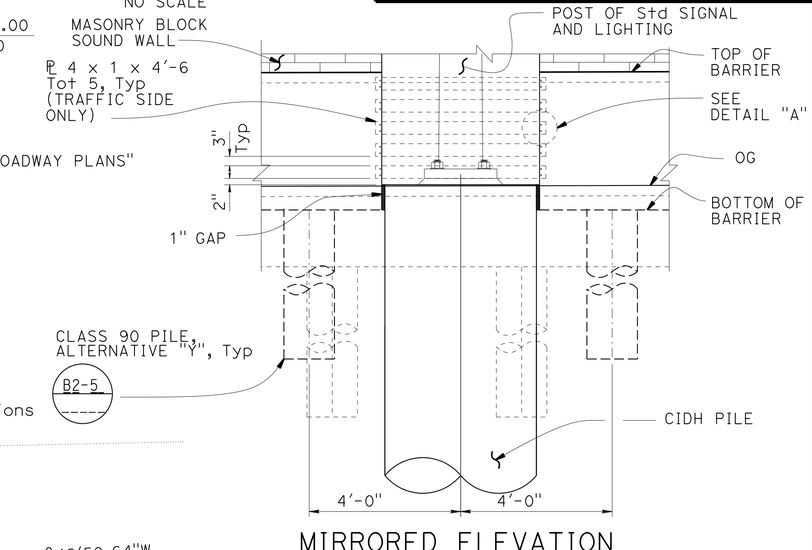

MIRRORED ELEVATION

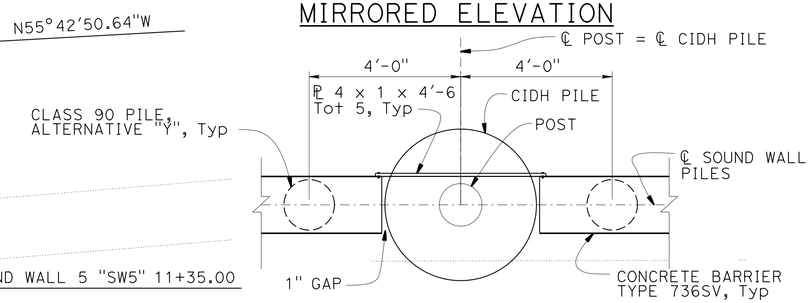

PLAN

CROSSING DETAIL

½" = 1'-0"

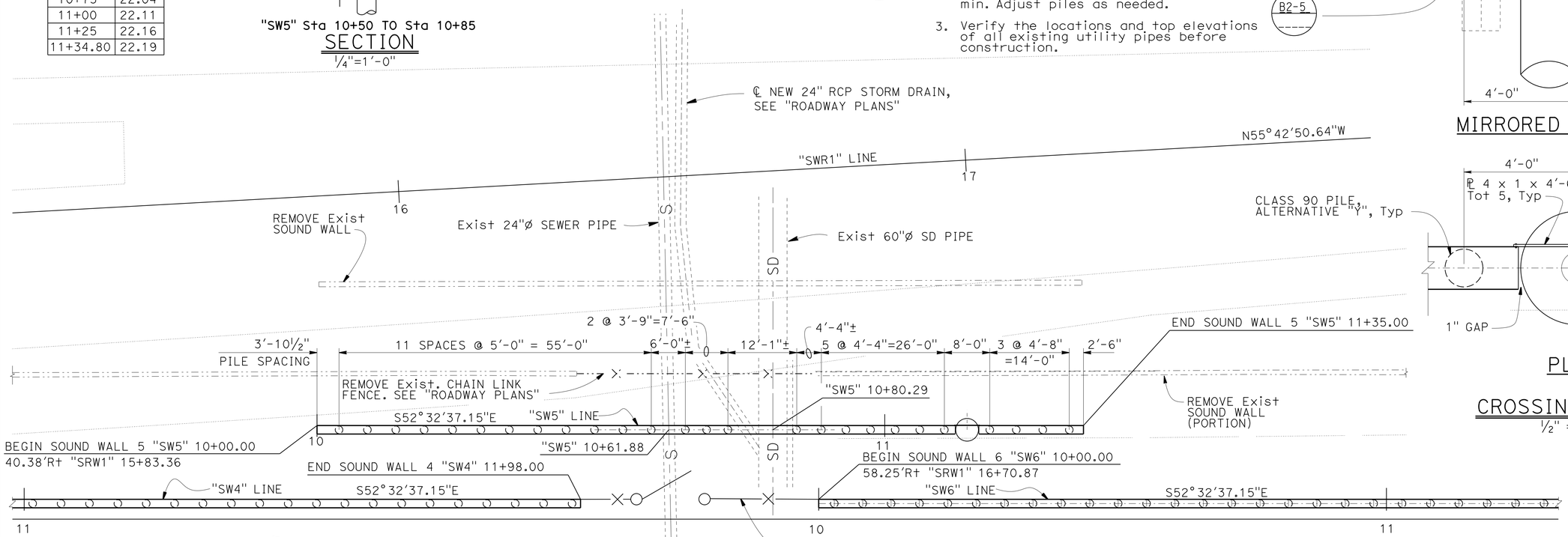

PLAN

1" = 10'

NOTE
For FG see "ROADWAY PLANS"

NOTE:
THE CONTRACTOR MUST VERIFY ALL CONTROLLING FIELD DIMENSIONS BEFORE ORDERING OR FABRICATING ANY MATERIAL.

	BY	CHECKED
DESIGN	L. Wang	Li Barnard
DETAILS	M Lane	Li Barnard
QUANTITIES	Linan Wang	Qi Zhao

STATE OF CALIFORNIA
DEPARTMENT OF TRANSPORTATION

DIVISION OF ENGINEERING SERVICES
STRUCTURE DESIGN
DESIGN BRANCH 4

BRIDGE NO. X
POST MILE X

ROUTE 101/ WILLOW INTERCHANGE
SOUND WALL 4, 5 & 6
STRUCTURE PLAN NO 2

STRUCTURES DESIGN DETAIL SHEET (ENGLISH) (REV. 09-01-10)

ORIGINAL SCALE IN INCHES FOR REDUCED PLANS 0 1 2 3

UNIT: 59-3579
PROJECT NUMBER & PHASE: 04000006804
CONTRACT NO.: 04-235654

DISREGARD PRINTS BEARING EARLIER REVISION DATES

REVISION DATES 11-17-15 10-05-15 10-15-15 11-20-15

SHEET 4 OF 7

FILE => sw4-c-sp02.dgn

USERNAME => s132175 DATE PLOTTED => 17-AUG-2016 TIME PLOTTED => 11:33

DIST	COUNTY	ROUTE	POST MILES TOTAL PROJECT	SHEET No.	TOTAL SHEETS
04	SM	101,114	1.3/2.5, 5.0/5.3	566	568

REGISTERED CIVIL ENGINEER 11-10-15 DATE

6-29-16
PLANS APPROVAL DATE

REGISTERED PROFESSIONAL ENGINEER LINAN WANG No. 54714 Exp. 12-31-17 CIVIL STATE OF CALIFORNIA

The State of California or its officers or agents shall not be responsible for the accuracy or completeness of scanned copies of this plan sheet.

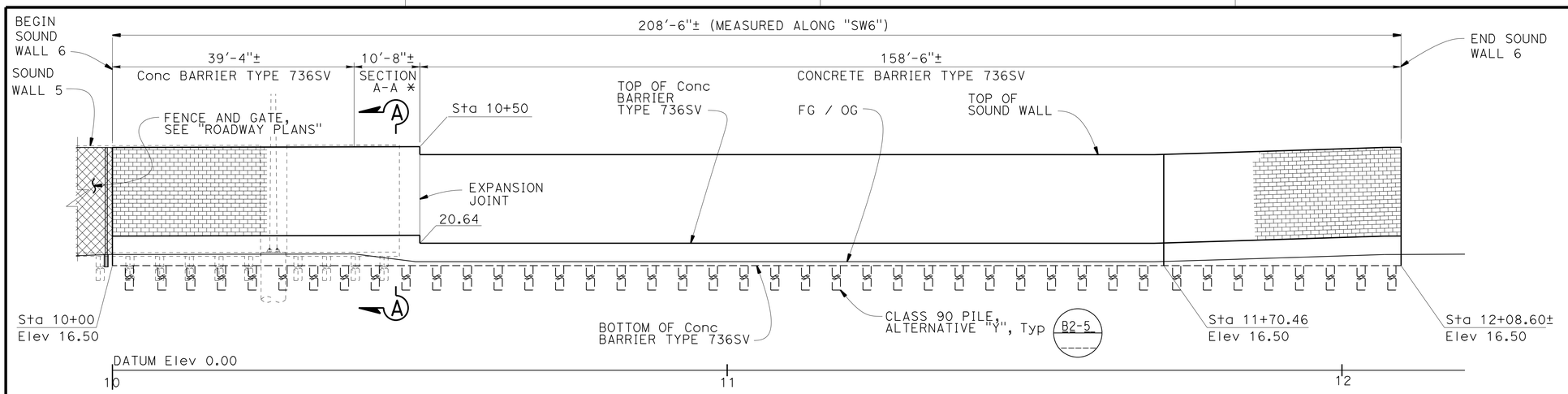

* Concrete Barrier Type 736SV (Mod)
"he" = 1'-0" Min

DEVELOPED ELEVATION SOUND WALL 6

NO SCALE

RSP B15-6 RSP B15-7

NOTES
1. All Class 90 Pile Alternative "Y" shall be 26'-0" long below bottom of Type 726SV Barrier
2. For "SECTION A-A" see "STRUCTURE PLAN NO 1" sheet.

TOP ELEVATION OF Conc BARRIER TYPE 736SV & 736SV (Mod) "SW6" LINE

Sta	Elev
10+00	21.80
10+25	21.86
10+50	21.90
10+75	20.64
11+00	20.64
11+25	20.64
11+50	20.64
11+75	20.80
12+00	21.60
12+08.60	21.62

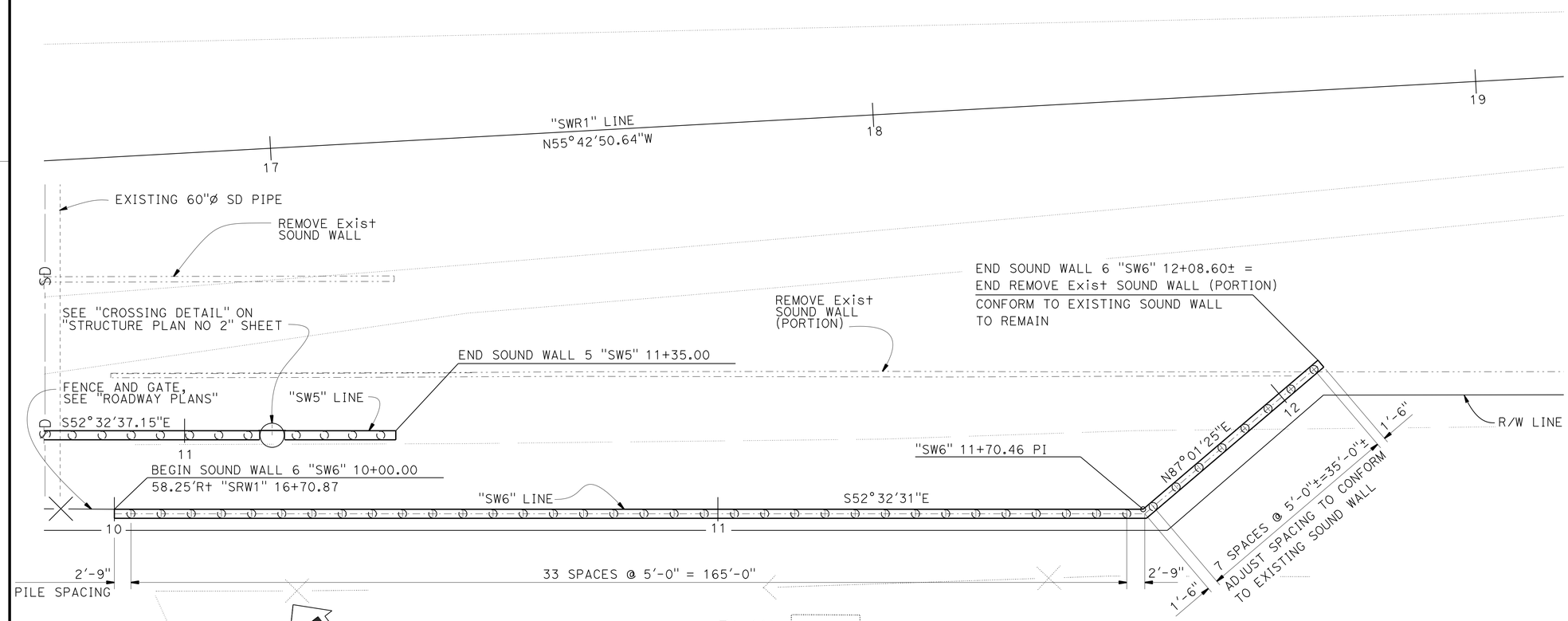

NOTE:
THE CONTRACTOR MUST VERIFY ALL CONTROLLING FIELD DIMENSIONS BEFORE ORDERING OR FABRICATING ANY MATERIAL.

PLAN

1" = 10'

NOTE
For FG see "ROADWAY PLANS"

	BY	CHECKED
DESIGN	L. Wang	Li Barnard
DETAILS	M Lane	Li Barnard
QUANTITIES	Linan Wang	Qi Zhao

STATE OF CALIFORNIA
DEPARTMENT OF TRANSPORTATION

DIVISION OF ENGINEERING SERVICES
STRUCTURE DESIGN
DESIGN BRANCH 4

BRIDGE NO. X
POST MILE X

ROUTE 101/ WILLOW INTERCHANGE
SOUND WALL 4, 5 & 6
STRUCTURE PLAN NO. 3

STRUCTURES DESIGN DETAIL SHEET (ENGLISH) (REV. 09-01-10)

ORIGINAL SCALE IN INCHES FOR REDUCED PLANS 0 1 2 3

UNIT: 59-3579
PROJECT NUMBER & PHASE: 04000006804
CONTRACT NO.: 04-235654

DISREGARD PRINTS BEARING EARLIER REVISION DATES

REVISION DATES 08-18-15 09-28-15 11-05-15 11-20-15

SHEET 5 OF 7

FILE => sw4-c-sp03.dgn

USERNAME => s132775 DATE PLOTTED => 17-AUG-2016 TIME PLOTTED => 11:33

DIST	COUNTY	ROUTE	POST MILES TOTAL PROJECT	SHEET No.	TOTAL SHEETS
04	SM	101,114	1.3/2.5, 5.0/5.3	567	568

REGISTERED CIVIL ENGINEER 11-10-15 DATE

6-29-16
PLANS APPROVAL DATE

REGISTERED PROFESSIONAL ENGINEER LINAN WANG No. 54714 Exp 12-31-17 CIVIL STATE OF CALIFORNIA

The State of California or its officers or agents shall not be responsible for the accuracy or completeness of electronic copies of this plan sheet.

CURVE DATA

No. ⊛	R	Δ	T	L
1	300.00	22°52'00"	60.67	119.73

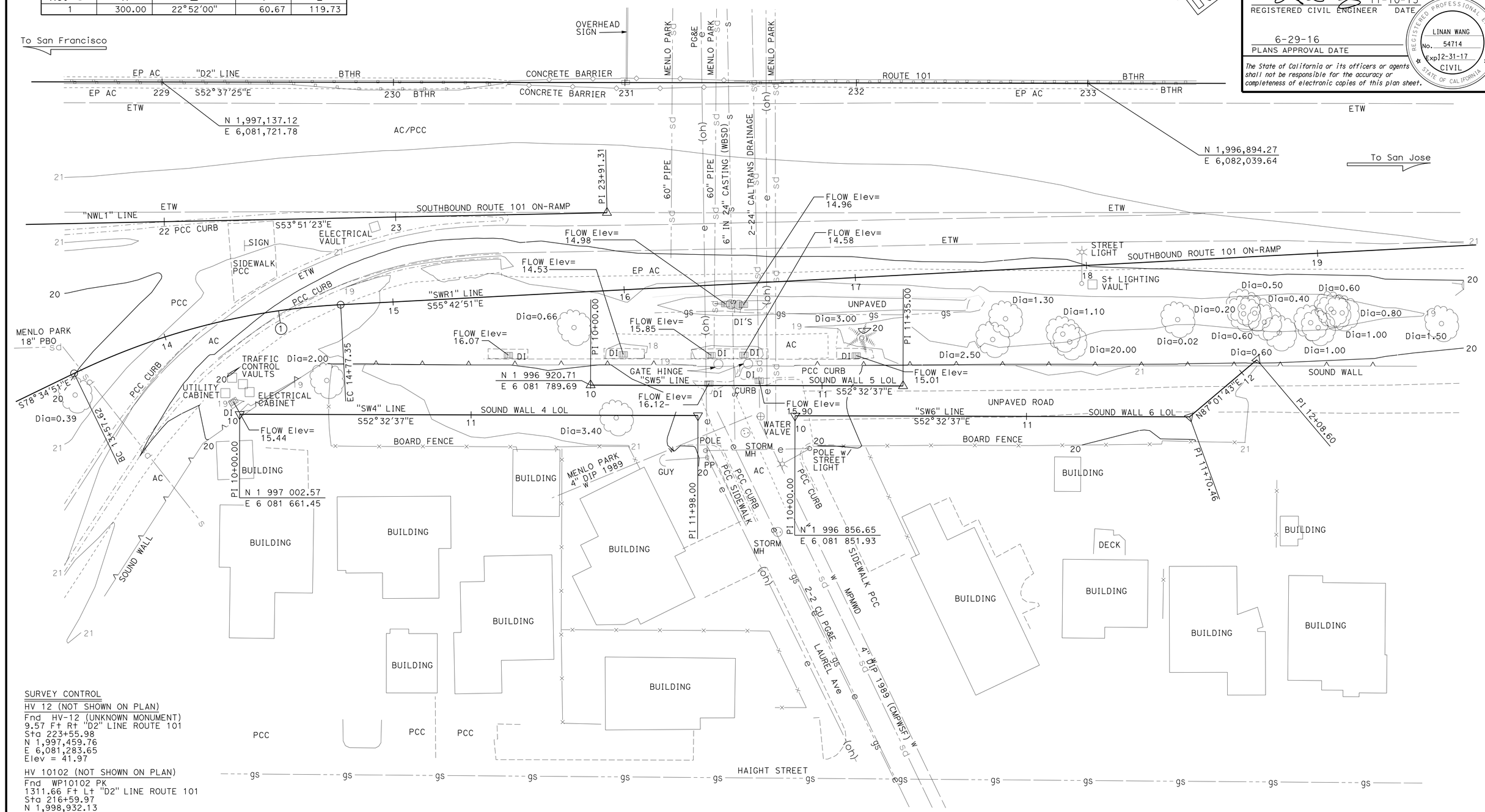

SURVEY CONTROL

HV 12 (NOT SHOWN ON PLAN)
Fnd HV-12 (UNKNOWN MONUMENT)
9.57 Ft Rt "D2" LINE ROUTE 101
Sta 223+55.98
N 1,997,459.76
E 6,081,283.65
Elev = 41.97

HV 10102 (NOT SHOWN ON PLAN)
Fnd WP10102 PK
1311.66 Ft Lt "D2" LINE ROUTE 101
Sta 216+59.97
N 1,998,932.13
E 6,081,532.78
Elev = 14.09

ROUTE 101/ WILLOW INTERCHANGE

SOUND WALL 4, 5 & 6

FOUNDATION PLAN

PRELIMINARY INVESTIGATION SECTION

SCALE 1"=20'	VERT.DATUM NGVD29	PHOTOGRAMMETRY AS OF: X		
HORZ.DATUM NAD83 (1991.35)	SURVEYED	BY DISTRICT	CHECKED	BY C. FASSETT 01/2015
ALIGNMENT TIES Dist TRAVERSE SHEET	DRAFTED	BY T. ZOLNIKOV 01/2015	CHECKED	BY L. LEW 01/2015

DESIGN	BY Linan Wang	CHECKED Li Barnard
DETAILS	BY Jeff Thorne	CHECKED Li Barnard
QUANTITIES	BY Linan Wang	CHECKED Qi Zhao

STATE OF CALIFORNIA
DEPARTMENT OF TRANSPORTATION

DIVISION OF ENGINEERING SERVICES
STRUCTURE DESIGN
DESIGN BRANCH 4

BRIDGE NO. ------
POST MILE -----

STRUCTURES FOUNDATION PLAN SHEET (ENGLISH) (REV. 09-01-10)

ORIGINAL SCALE IN INCHES FOR REDUCED PLANS 0 1 2 3

UNIT: 3646
PROJECT NUMBER & PHASE: 0400000680 4
CONTRACT NO.: 04-235654

SUBMITTAL DATE	REVISION DATES			SHEET	OF
03/18/15	11/18/15			6	7

FILE => sw4-e-4-5-6-fp101.dgn

USERNAME => s132175 DATE PLOTTED => 17-AUG-2016 TIME PLOTTED => 11:33

DIST	COUNTY	ROUTE	POST MILES TOTAL PROJECT	SHEET No.	TOTAL SHEETS
04	SM	101,114	1.3/2.5, 5.0/5.3	568	568

REGISTERED CIVIL ENGINEER — DATE 10-20-15

PROFESSIONAL GEOLOGIST — Matthew Gaffney — No. 8045 — Exp. 6-30-16 — STATE OF CALIFORNIA

6-29-16
PLANS APPROVAL DATE

The State of California or its officers or agents shall not be responsible for the accuracy or completeness of electronic copies of this plan sheet.

This LOTB sheet was prepared in accordance with the Caltrans Soil & Rock Logging, Classification, & Presentation Manual (2010 Edition).

See 2010 Standard Plans A10F and A10G for Soil Legend, and A10H for Rock Legend.

BENCH MARK

HV 12
Fnd HV-12 (unknown monument)
9.57 FT Rt "D2" LINE ROUTE 101
Sta 223+55.98
N 1,997,459.76
E 6,081,283.65
Elev = 41.97

HV 10142
Fnd WP10102 PK
1311.66 Ft Lt "D2" LINE ROUTE 101
Sta 216+59.97
N 1,998,932.13
E 6,081,532.78
Elev = 14.09

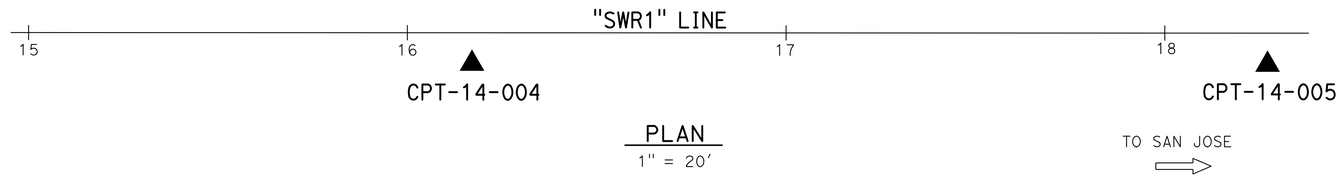

PLAN
1" = 20'

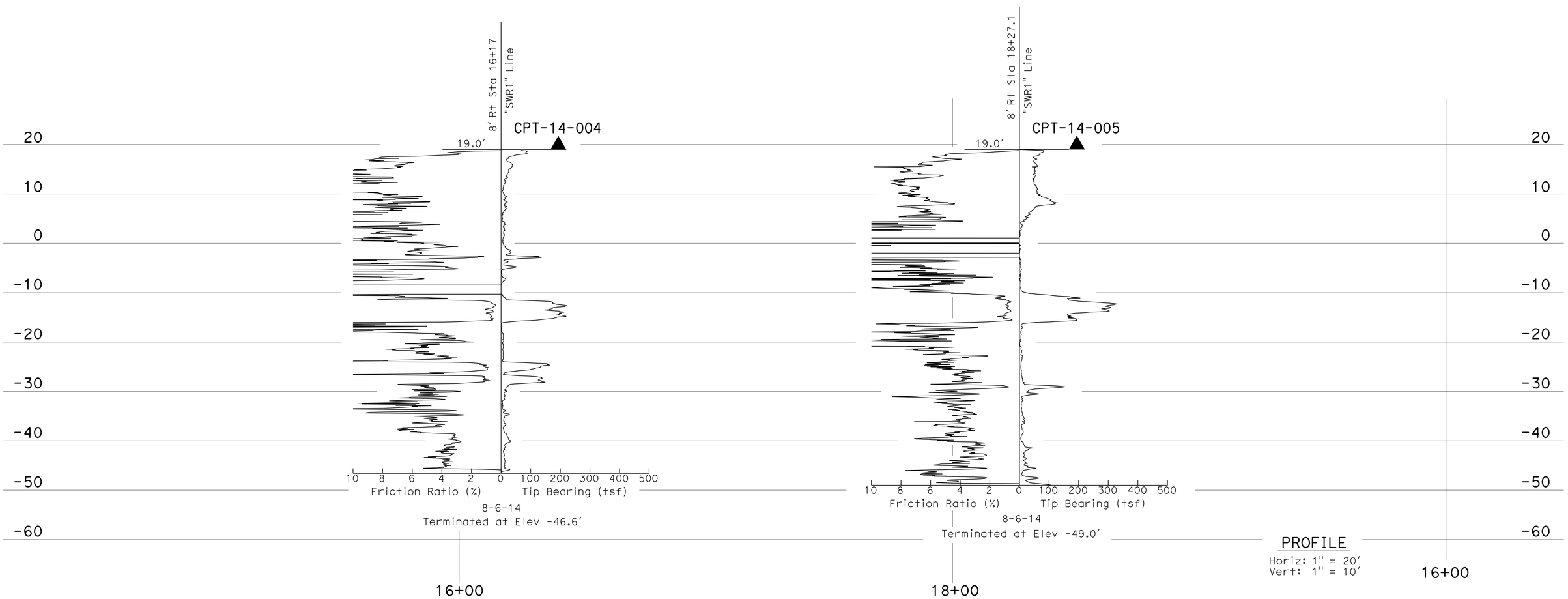

PROFILE
Horiz: 1" = 20'
Vert: 1" = 10'

ENGINEERING SERVICES	MATERIALS AND GEOTECHNICAL SERVICES	STATE OF CALIFORNIA DEPARTMENT OF TRANSPORTATION	DIVISION OF ENGINEERING SERVICES STRUCTURE DESIGN DESIGN BRANCH 4	BRIDGE NO. / POST MILE	ROUTE 101/ WILLOW INTERCHANGE SOUND WALLS 4, 5, 6 LOG OF TEST BORINGS
FUNCTIONAL SUPERVISOR NAME: C. Risden	DRAWN BY: I. G-Remmen CHECKED BY: D. Nesbitt	FIELD INVESTIGATION BY: M. Gaffney, R. Nashed			

OGS CIVIL LOG OF TEST BORINGS SHEET

ORIGINAL SCALE IN INCHES FOR REDUCED PLANS 0 1 2 3

UNIT: 59-3579
PROJECT NUMBER & PHASE: 04000006804 CONTRACT NO.: 04-235654

DISREGARD PRINTS BEARING EARLIER REVISION DATES

REVISION DATES: 08-25-15 10-19-15 — SHEET 7 OF 7

FILE => sw4-f-4-5-6-z-ltb01.dgn

USERNAME => s132775 DATE PLOTTED => 17-AUG-2016 TIME PLOTTED => 11:33