Dist	COUNTY	ROUTE	POST MILES TOTAL PROJECT	SHEET No.	TOTAL SHEETS
02	Sis	96	R52.5/88.4	101	208

Theresa Gabriel
REGISTERED ELECTRICAL ENGINEER

October 30, 2015
PLANS APPROVAL DATE

REGISTERED PROFESSIONAL ENGINEER Theresa Aziz Gabriel No. E15129 Exp. 6-30-16 ELECTRICAL STATE OF CALIFORNIA

THE STATE OF CALIFORNIA OR ITS OFFICERS OR AGENTS SHALL NOT BE RESPONSIBLE FOR THE ACCURACY OR COMPLETENESS OF SCANNED COPIES OF THIS PLAN SHEET.

TO ACCOMPANY PLANS DATED 06-15-16

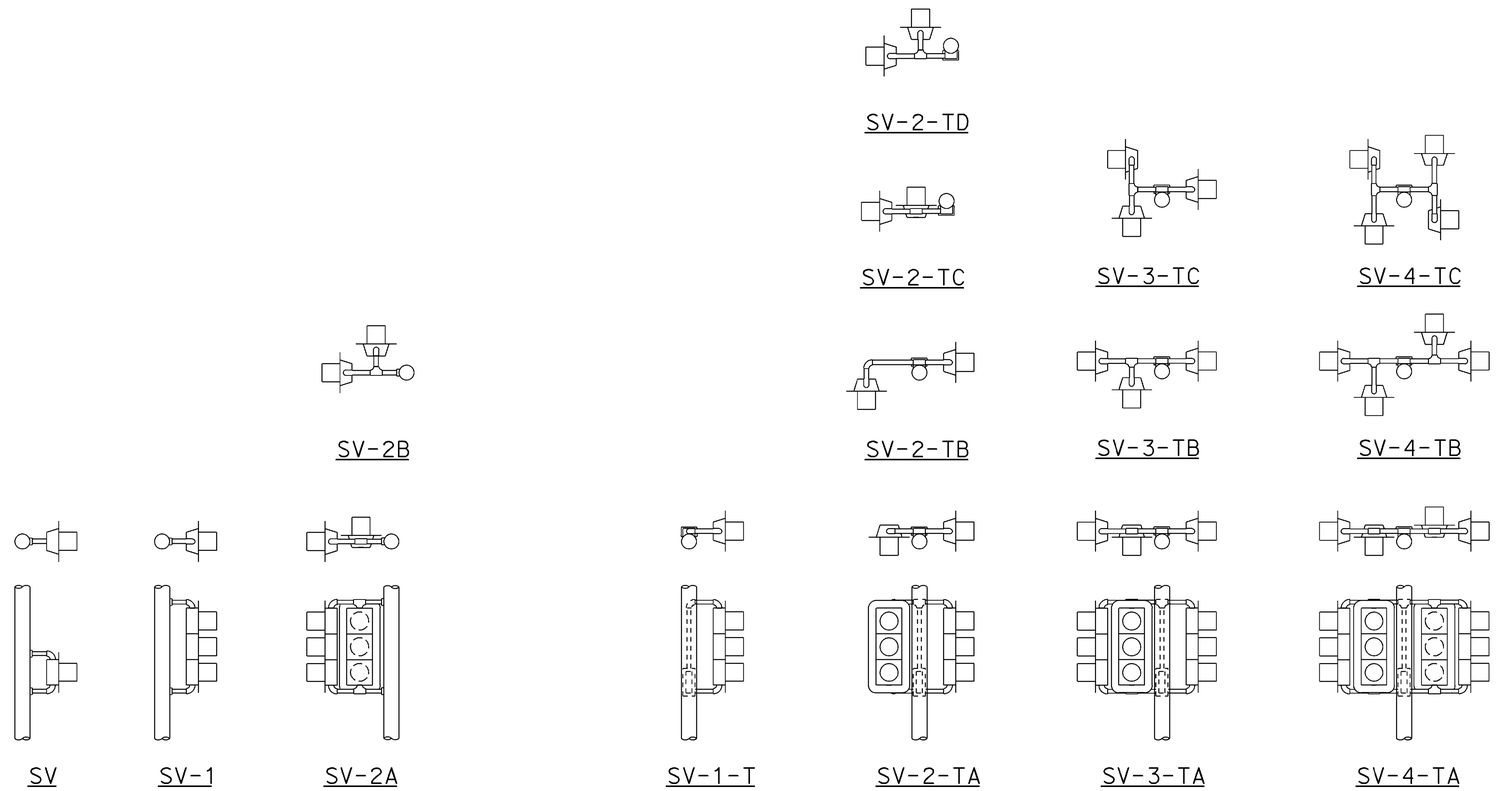

SIDE MOUNTINGS

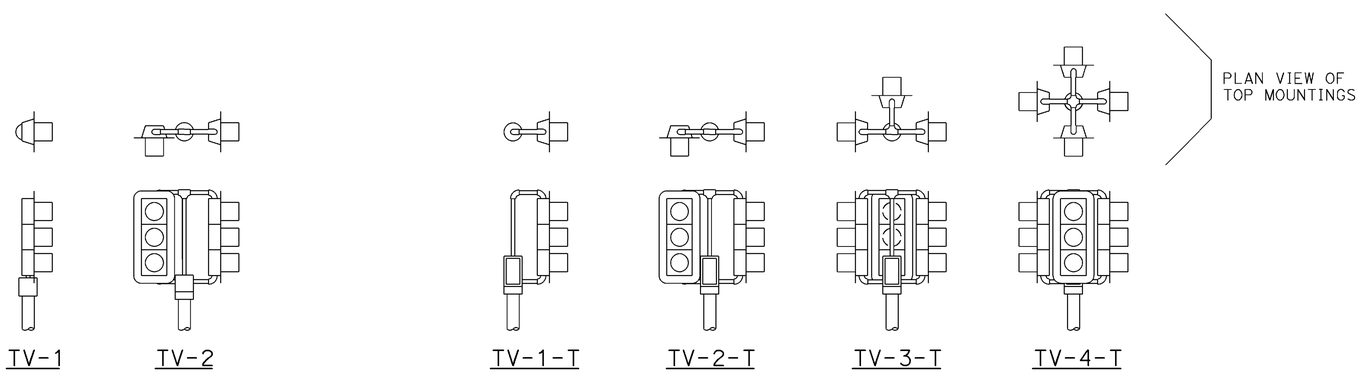

TOP MOUNTINGS

ABBREVIATIONS:

SV	SIDE MOUNTED SIGNAL HEADS
T	TERMINAL COMPARTMENT
TV	TOP MOUNTED SIGNAL HEADS
1, 2, 3, 4	NUMBER OF SIGNAL FACES (3 - SECTION, UNLESS OTHERWISE INDICATED)
A, B, C, D	CONFIGURATION OF SIGNALS

NOTES:

1. Mountings shall be oriented to provide maximum horizontal clearance to adjacent roadway.
2. Bracket arms shall be long enough to permit proper alignment of signals and backplate installation.
3. See Revised Standard Plans RSP ES-4D and RSP ES-4E for attachment fitting details.

STATE OF CALIFORNIA
DEPARTMENT OF TRANSPORTATION

ELECTRICAL SYSTEMS (SIGNAL HEADS AND MOUNTINGS)

NO SCALE

RSP ES-4A DATED OCTOBER 30, 2015 SUPERSEDES RSP ES-4A DATED JULY 19, 2013 AND STANDARD PLAN ES-4A DATED MAY 20, 2011 - PAGE 443 OF THE STANDARD PLANS BOOK DATED 2010.

REVISED STANDARD PLAN RSP ES-4A

2010 REVISED STANDARD PLAN RSP ES-4A

DATE PLOTTED => 23-AUG-2016
TIME PLOTTED => 06:15

Dist	COUNTY	ROUTE	POST MILES TOTAL PROJECT	SHEET No.	TOTAL SHEETS
02	Sis	96	R52.5/88.4	102	208

Theresa Gabriel
REGISTERED ELECTRICAL ENGINEER

October 30, 2015
PLANS APPROVAL DATE

REGISTERED PROFESSIONAL ENGINEER Theresa Aziz Gabriel No. E15129 Exp. 6-30-16 ELECTRICAL STATE OF CALIFORNIA

THE STATE OF CALIFORNIA OR ITS OFFICERS OR AGENTS SHALL NOT BE RESPONSIBLE FOR THE ACCURACY OR COMPLETENESS OF SCANNED COPIES OF THIS PLAN SHEET.

TO ACCOMPANY PLANS DATED 06-15-16

VISORS

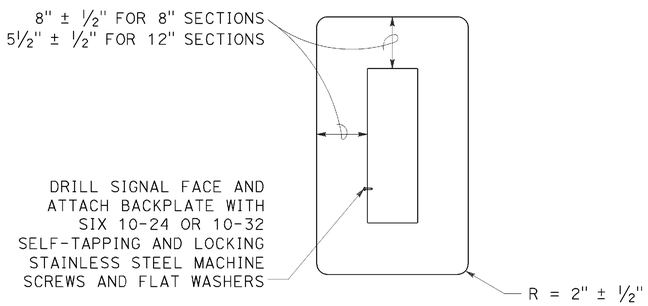

8" AND 12" SECTIONS

BACKPLATE

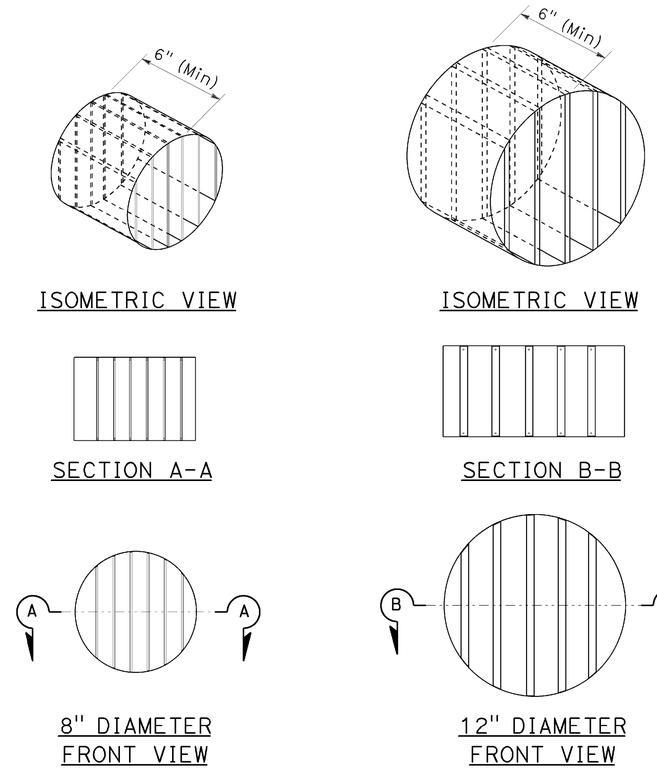

DIRECTIONAL LOUVER

Directional louvers shall be oriented and secured in place with one plated brass machine screw and nut.

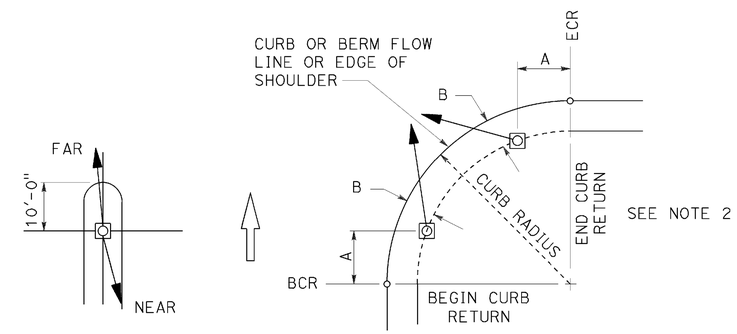

NOTES:

1. Typical signal pole placement unless dimensioned on plans.
2. For A and B dimensions, see Pole Schedule.

SIGNAL STANDARD PLACEMENT DIMENSIONS AND EQUIPMENT LOCATIONS

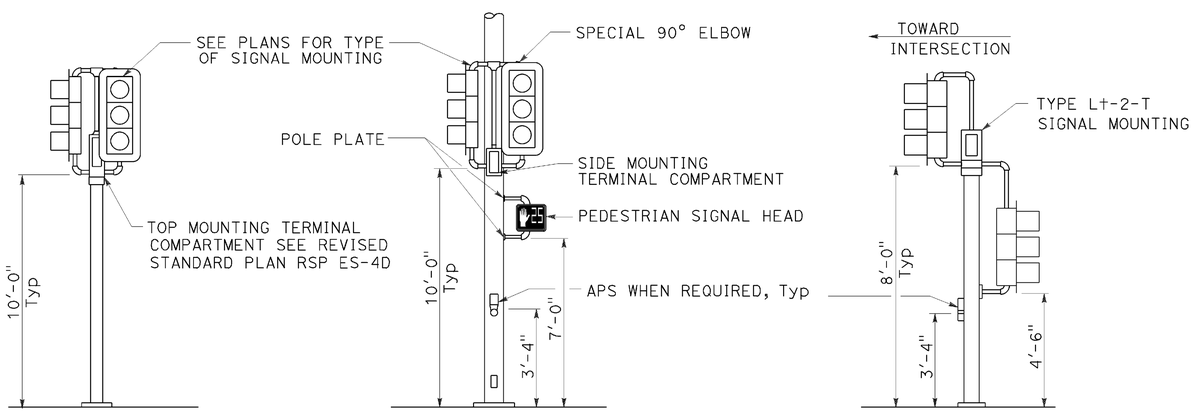

TOP MOUNTED SIGNALS (TV)

Type 1-A, 1-B, 1-C and 1-D standard as indicated on the plans

SIDE MOUNTED SIGNALS (SV AND SP)

Normally used on standards with luminaire or signal mast arm

LEFT TURN LANE SIGNAL

Type 1-A, 1-B, 1-C and 1-D standard as indicated on plans

TYPICAL SIGNAL HEAD INSTALLATIONS

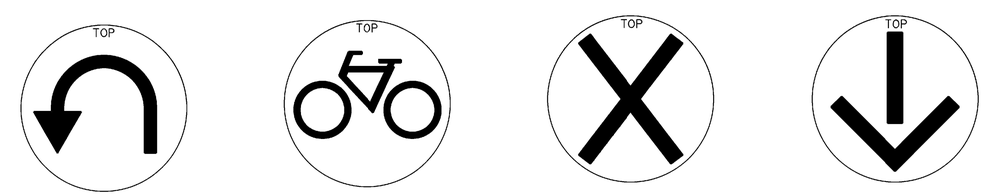

U-TURN | BICYCLE | LANE CONTROL | LANE CONTROL

SIGNAL FACES

STATE OF CALIFORNIA
DEPARTMENT OF TRANSPORTATION

ELECTRICAL SYSTEMS (SIGNAL HEADS AND MOUNTINGS)

NO SCALE

RSP ES-4C DATED OCTOBER 30, 2015 SUPERSEDES RSP ES-4C DATED JULY 19, 2013 AND STANDARD PLAN ES-4C DATED MAY 20, 2011 - PAGE 445 OF THE STANDARD PLANS BOOK DATED 2010.

REVISED STANDARD PLAN RSP ES-4C

2010 REVISED STANDARD PLAN RSP ES-4C

DATE PLOTTED => 23-AUG-2016
TIME PLOTTED => 08:15

Dist	COUNTY	ROUTE	POST MILES TOTAL PROJECT	SHEET No.	TOTAL SHEETS
02	Sis	96	R52.5/88.4	103	208

Theresa Gabriel
REGISTERED ELECTRICAL ENGINEER

October 30, 2015
PLANS APPROVAL DATE

REGISTERED PROFESSIONAL ENGINEER Theresa Aziz Gabriel No. E15129 Exp. 6-30-16 ELECTRICAL STATE OF CALIFORNIA

THE STATE OF CALIFORNIA OR ITS OFFICERS OR AGENTS SHALL NOT BE RESPONSIBLE FOR THE ACCURACY OR COMPLETENESS OF SCANNED COPIES OF THIS PLAN SHEET.

TO ACCOMPANY PLANS DATED 06-15-16

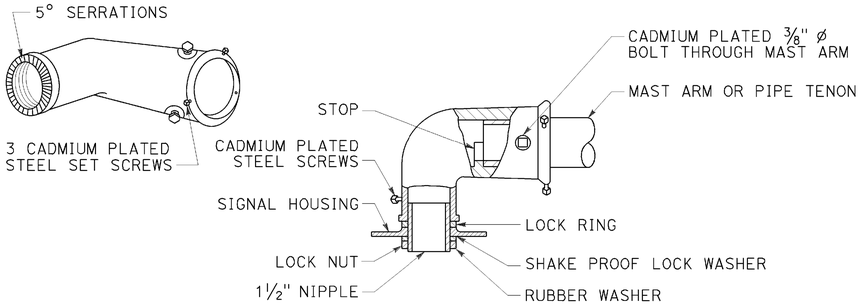

TYPE MAT
MAST ARM MOUNTING
For 2 NPS pipe, see Note 1.

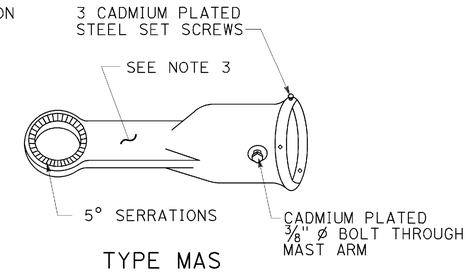

TYPE MAS
MAST ARM MOUNTING
For 2 NPS pipe, see Note 1.

SIGNAL SLIP FITTERS

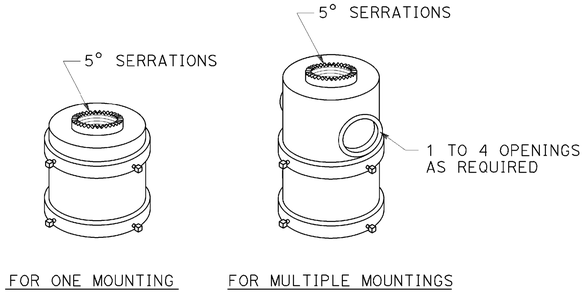

TOP MOUNTINGS
For 4 NPS pipe, see Note 2.

NOTES:

1. After mast arm signal has been plumbed and secured, drill 7/16" hole through mast arm tenon in line with slip fitter hole. Place a cadmium plated 3/8" ø galvanized bolt with washer under bolt head through hole and secure with washer, nut, and locknut. Seal openings between mast arm mountings and mast arm with mastic.
2. (A) Threaded top mounted slip fitter openings shall be 1½ NPS.
   (B) Serrations in fittings shall match those on bottom of signal heads or in lock ring.
   (C) Top opening shall be offset when backplate is used.
3. Wireway shall have a cross section area of 0.95 square inch minimum. Minimum width of ½".

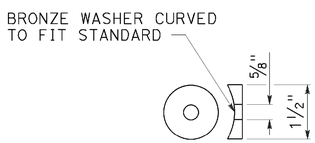

DETAIL C

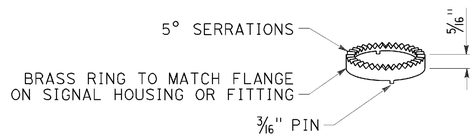

LOCK RING
Use where locking ring is not integral With signal housing or fitting.

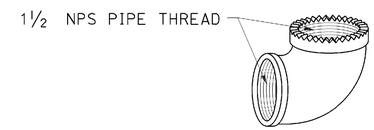

SPECIAL 90° ELBOW
One for each signal head, except those With special slip fitter mounting

MISCELLANEOUS MOUNTING HARDWARE

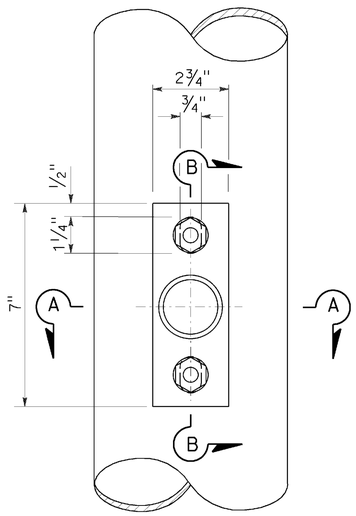

TOP VIEW

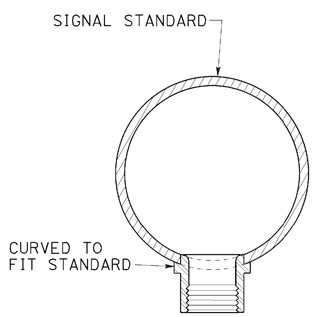

SECTION A-A

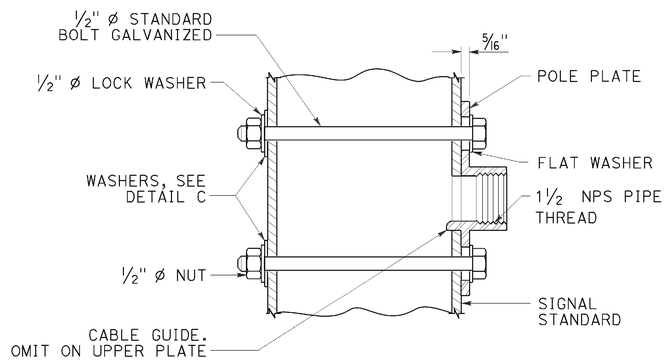

SECTION B-B

POLE PLATE FOR SIDE MOUNTED SIGNAL HEAD
WITHOUT TERMINAL COMPARTMENT

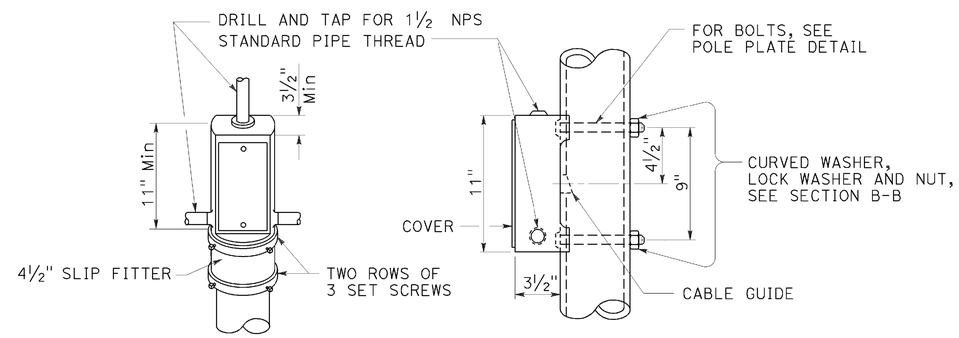

TOP MOUNTING

SIDE MOUNTING

TERMINAL COMPARTMENT

STATE OF CALIFORNIA
DEPARTMENT OF TRANSPORTATION

ELECTRICAL SYSTEMS (SIGNAL HEAD MOUNTING)

NO SCALE

RSP ES-4D DATED OCTOBER 30, 2015 SUPERSEDES STANDARD PLAN ES-4D DATED MAY 20, 2011 - PAGE 446 OF THE STANDARD PLANS BOOK DATED 2010.

REVISED STANDARD PLAN RSP ES-4D

2010 REVISED STANDARD PLAN RSP ES-4D

DATE PLOTTED => 23-AUG-2016
TIME PLOTTED => 08:15

Dist	COUNTY	ROUTE	POST MILES TOTAL PROJECT	SHEET No.	TOTAL SHEETS
02	Sis	96	R52.5/88.4	104	208

Theresa Gabriel
REGISTERED ELECTRICAL ENGINEER

April 15, 2016
PLANS APPROVAL DATE

REGISTERED PROFESSIONAL ENGINEER Theresa Aziz Gabriel No. E15129 Exp. 6-30-16 ELECTRICAL STATE OF CALIFORNIA

THE STATE OF CALIFORNIA OR ITS OFFICERS OR AGENTS SHALL NOT BE RESPONSIBLE FOR THE ACCURACY OR COMPLETENESS OF SCANNED COPIES OF THIS PLAN SHEET.

TO ACCOMPANY PLANS DATED 06-15-16

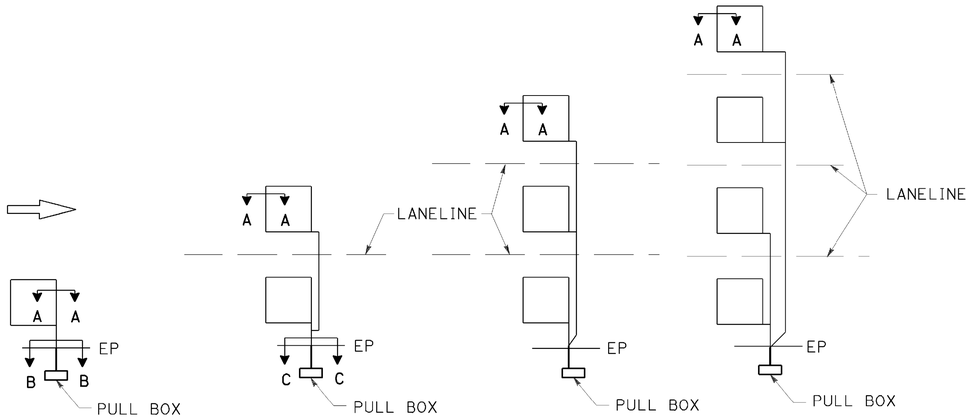

SAW CUT DETAILS

Type A loop detector configurations illustrated

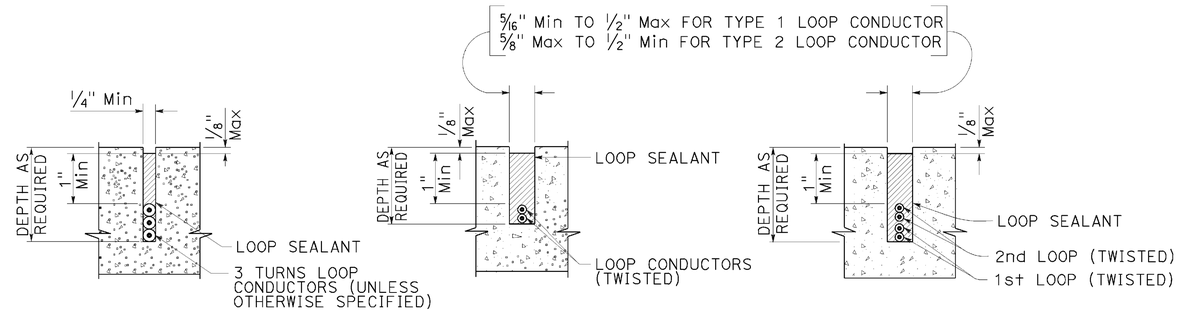

SECTION A-A SECTION B-B SECTION C-C

SLOT DETAILS - TYPE 1 AND TYPE 2 LOOP CONDUCTOR

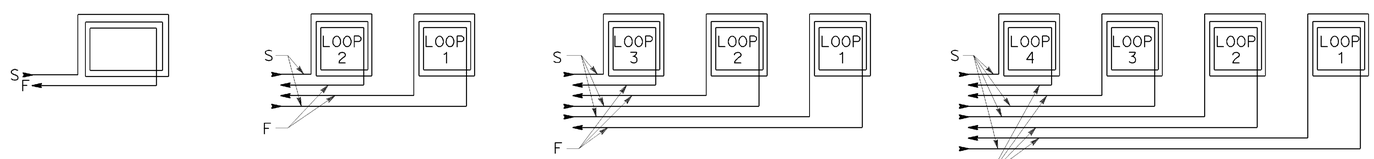

WINDING DETAILS

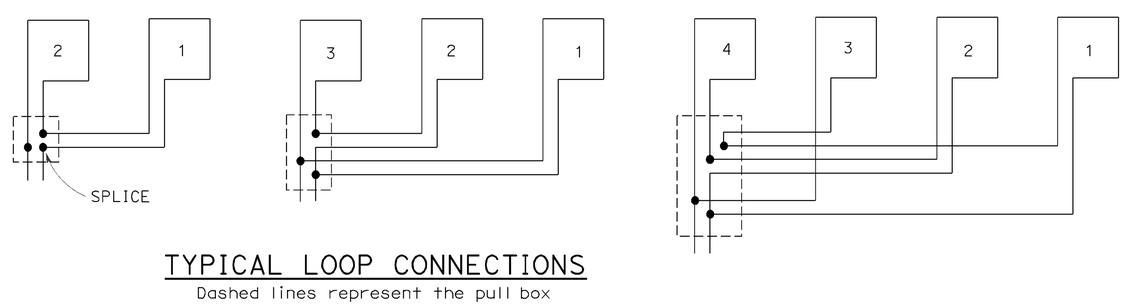

TYPICAL LOOP CONNECTIONS

Dashed lines represent the pull box

ABBREVIATIONS:

S - START
F - FINISH

STATE OF CALIFORNIA
DEPARTMENT OF TRANSPORTATION

ELECTRICAL SYSTEMS (LOOP DETECTORS)

NO SCALE

RSP ES-5A DATED APRIL 15, 2016 SUPERSEDES RSP ES-5A DATED OCTOBER 30, 2015 AND STANDARD PLAN ES-5A DATED MAY 20, 2011 - PAGE 448 OF THE STANDARD PLANS BOOK DATED 2010.

REVISED STANDARD PLAN RSP ES-5A

2010 REVISED STANDARD PLAN RSP ES-5A

DATE PLOTTED => 23-AUG-2016
TIME PLOTTED => 06:16

Dist	COUNTY	ROUTE	POST MILES TOTAL PROJECT	SHEET No.	TOTAL SHEETS
02	Sis	96	R52.5/88.4	105	208

Theresa Gabriel
REGISTERED ELECTRICAL ENGINEER

April 15, 2016
PLANS APPROVAL DATE

REGISTERED PROFESSIONAL ENGINEER Theresa Aziz Gabriel No. E15129 Exp. 6-30-16 ELECTRICAL STATE OF CALIFORNIA

THE STATE OF CALIFORNIA OR ITS OFFICERS OR AGENTS SHALL NOT BE RESPONSIBLE FOR THE ACCURACY OR COMPLETENESS OF SCANNED COPIES OF THIS PLAN SHEET.

TO ACCOMPANY PLANS DATED 06-15-16

2010 REVISED STANDARD PLAN RSP ES-5B

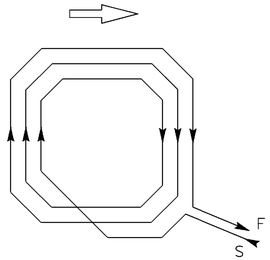

WINDING DETAIL

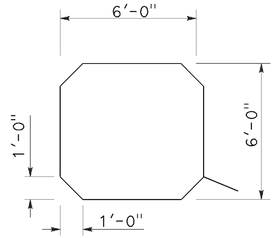

SAW CUT DETAIL

TYPE A LOOP DETECTOR CONFIGURATION

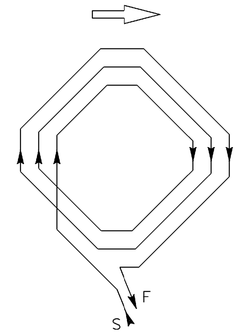

WINDING DETAIL

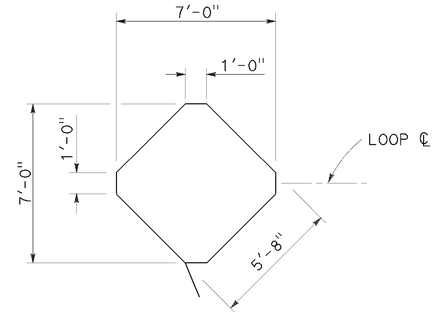

SAW CUT DETAIL

TYPE B LOOP DETECTOR CONFIGURATION

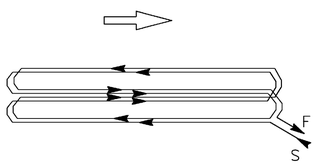

WINDING DETAIL

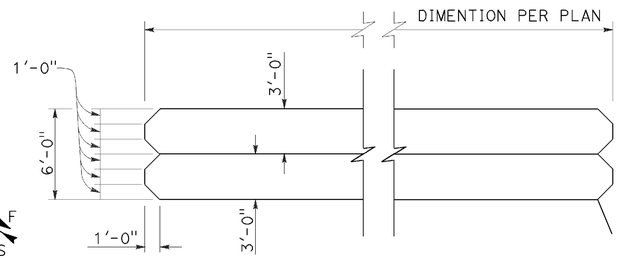

SAW CUT DETAIL

TYPE C LOOP DETECTOR CONFIGURATION

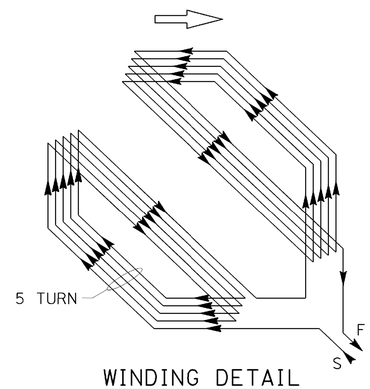

WINDING DETAIL

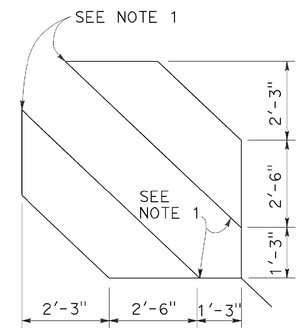

SAW CUT DETAIL

TYPE D LOOP DETECTOR CONFIGURATION

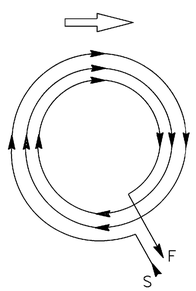

WINDING DETAIL

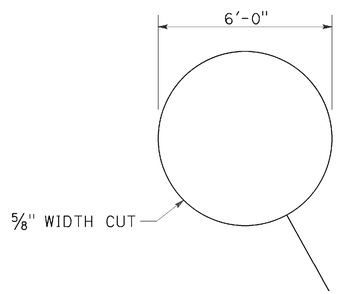

SAW CUT DETAIL

TYPE E LOOP DETECTOR CONFIGURATION

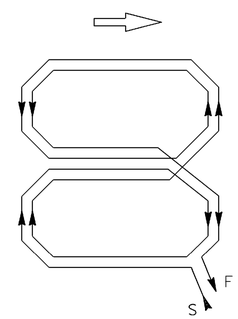

WINDING DETAIL

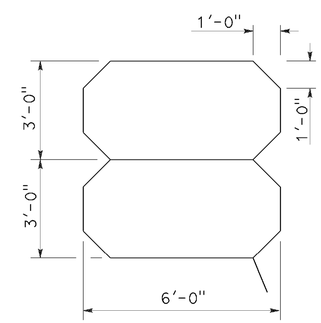

SAW CUT DETAIL

TYPE Q LOOP DETECTOR CONFIGURATION

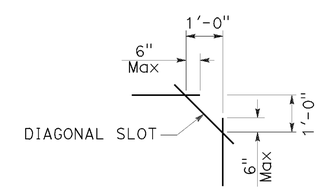

PLAN VIEW OF DIAGONAL SLOT AT CORNERS

NOTES:

1. Round corners of acute angle saw cuts to prevent damage to conductors.
2. Typical distance separating loops from edge to edge is 10' for Type A, B, D and E installation in single lane.
3. Use Type D loops for limit line detection and bicycle lanes.

STATE OF CALIFORNIA
DEPARTMENT OF TRANSPORTATION

ELECTRICAL SYSTEMS (DETECTORS)

NO SCALE

RSP ES-5B DATED APRIL 15, 2016 SUPERSEDES RSP ES-5B DATED OCTOBER 30, 2015 AND RSP ES-5B DATED JULY 19, 2013 AND STANDARD PLAN ES-5B DATED MAY 20, 2011 - PAGE 449 OF THE STANDARD PLANS BOOK DATED 2010.

REVISED STANDARD PLAN RSP ES-5B

DATE PLOTTED => 23-AUG-2016
TIME PLOTTED => 06:16

Dist	COUNTY	ROUTE	POST MILES TOTAL PROJECT	SHEET No.	TOTAL SHEETS
02	Sis	96	R52.5/88.4	106	208

Theresa Gabriel
REGISTERED ELECTRICAL ENGINEER

October 30, 2015
PLANS APPROVAL DATE

REGISTERED PROFESSIONAL ENGINEER
Theresa Aziz Gabriel
No. E15129
Exp. 6-30-16
ELECTRICAL
STATE OF CALIFORNIA

THE STATE OF CALIFORNIA OR ITS OFFICERS OR AGENTS SHALL NOT BE RESPONSIBLE FOR THE ACCURACY OR COMPLETENESS OF SCANNED COPIES OF THIS PLAN SHEET.

TO ACCOMPANY PLANS DATED 06-15-16

NOTES:

1. Back casting shape to fit curvature of pole.
2. Provide cover fitting for top of post, when PBA is mounted on push button assembly post.
3. Install push button on crosswalk side of standard.
4. Use R10 series regulatory signs and plaques for pedestrian and bicycle facilities.

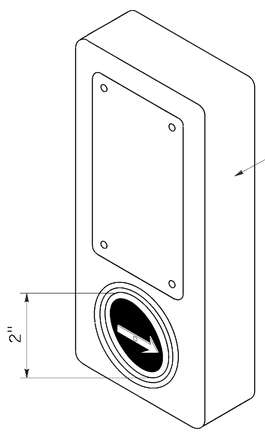

ACCESSIBLE PEDESTRIAN SIGNAL

DETAIL A

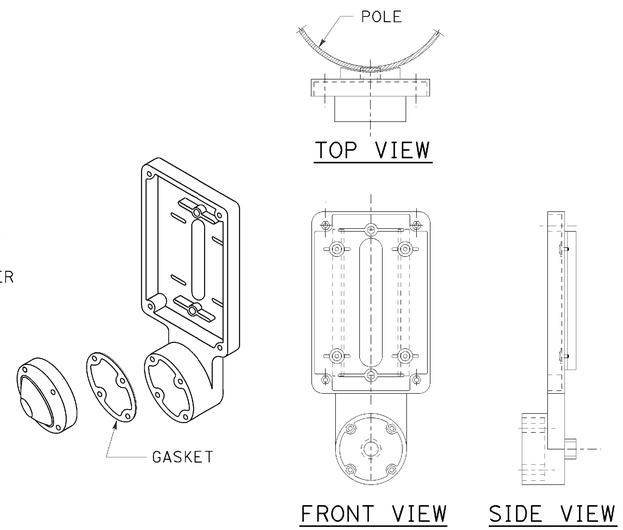

TYPE B PUSH BUTTON ASSEMBLY

DETAIL B

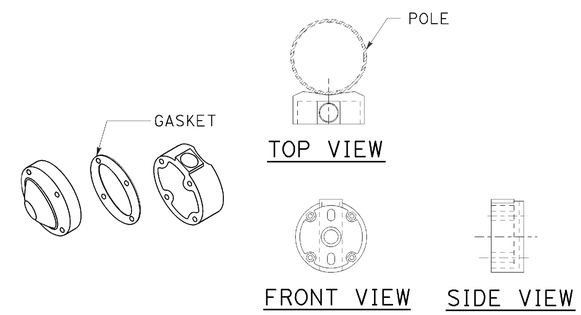

TYPE C PUSH BUTTON ASSEMBLY

DETAIL C

STATE OF CALIFORNIA
DEPARTMENT OF TRANSPORTATION

ELECTRICAL SYSTEMS (ACCESSIBLE PEDESTRIAN SIGNAL AND PUSH BUTTON ASSEMBLIES)

NO SCALE

RSP ES-5C DATED OCTOBER 30, 2015 SUPERSEDES RSP ES-5C DATED JULY 19, 2013 AND STANDARD PLAN ES-5C DATED MAY 20, 2011 - PAGE 450 OF THE STANDARD PLANS BOOK DATED 2010.

REVISED STANDARD PLAN RSP ES-5C

2010 REVISED STANDARD PLAN RSP ES-5C

DATE PLOTTED => 23-AUG-2016
TIME PLOTTED => 06:16

Dist	COUNTY	ROUTE	POST MILES TOTAL PROJECT	SHEET No.	TOTAL SHEETS
02	Sis	96	R52.5/88.4	107	208

Theresa Gabriel
REGISTERED ELECTRICAL ENGINEER

October 30, 2015
PLANS APPROVAL DATE

REGISTERED PROFESSIONAL ENGINEER Theresa Aziz Gabriel No. E15129 Exp. 6-30-16 ELECTRICAL STATE OF CALIFORNIA

THE STATE OF CALIFORNIA OR ITS OFFICERS OR AGENTS SHALL NOT BE RESPONSIBLE FOR THE ACCURACY OR COMPLETENESS OF SCANNED COPIES OF THIS PLAN SHEET.

TO ACCOMPANY PLANS DATED 06-15-16

2010 REVISED STANDARD PLAN RSP ES-5D

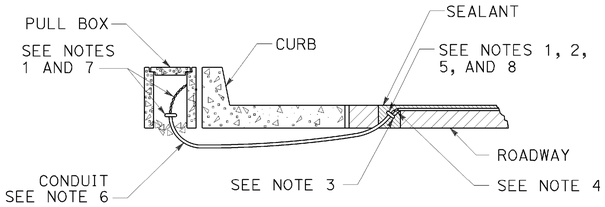

TYPE A
CURB TERMINATION DETAIL

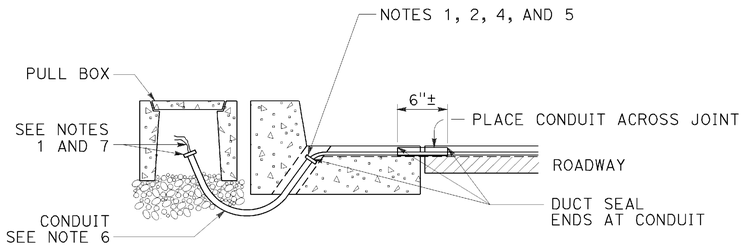

CROSS SECTION

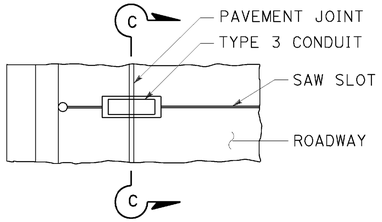

PLAN VIEW

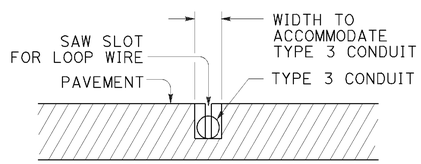

SECTION C-C

TYPE B
CURB TERMINATION DETAIL

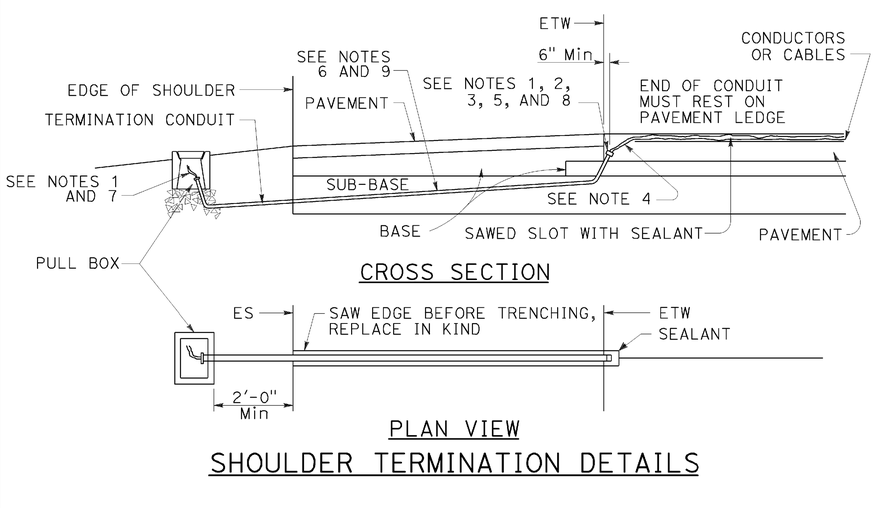

CROSS SECTION

PLAN VIEW

SHOULDER TERMINATION DETAILS

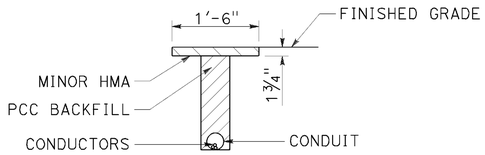

"T" TRENCH
DETAIL T

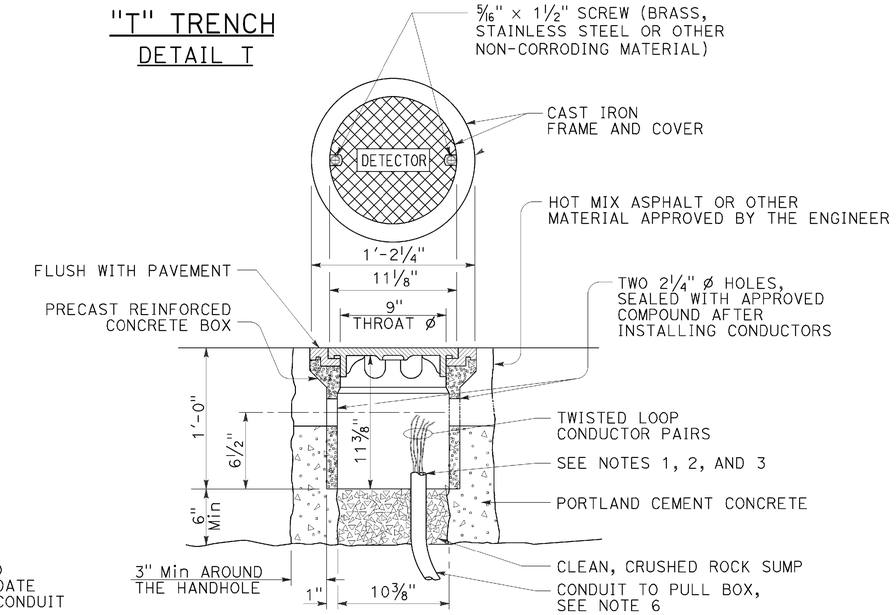

DETECTOR HANDHOLE DETAIL

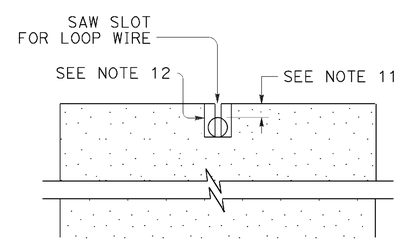

SECTION A-A

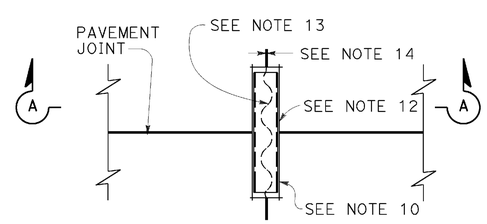

PLAN VIEW

TYPICAL LOOP LEAD-IN DETAIL AT PAVEMENT JOINT

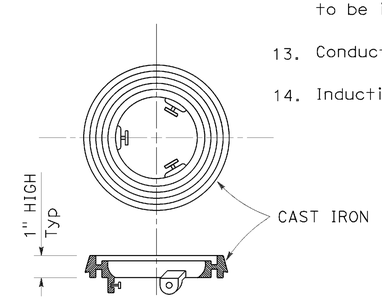

LOCKING GRADE RING

NOTES:

1. Bushing shall be used at end of conduit.
2. Tape detector conductors or cables 3" each side of bushings.
3. Install duct seal compound to each end of termination conduit before installing sealant.
4. Round all sharp edges where detector conductors or cables have to pass.
5. End of conduit shall be 3⅛" below roadway surface.
6.

Conduit size	Loop conductors
1"C minimum	1 to 2 pairs
1½"C minimum	3 to 4 pairs
2"C minimum	5 or more pairs

7. Splice detector conductors or cables to detector lead-in-cable.
8. Location of detector handhole when shown on plans.
9. When the shoulder and traveled way are paved with the same material and there is no joint between them, the conduit shall extend only 2'-0" into the shoulder pavement.
10. ¾"C, Type 3 conduit 6" long minimum, plug both ends with duct compound to keep out sealant.
11. ½" Minimum between top of conduit and pavement surface.
12. Sawcut shall not exceed 1" in width and ⅛" longer than conduit to be installed.
13. Conductors with ½" minimum slack inside conduit.
14. Inductive loop detector saw slot.

STATE OF CALIFORNIA
DEPARTMENT OF TRANSPORTATION

ELECTRICAL SYSTEMS (CURB AND SHOULDER TERMINATION, TRENCH, AND HANDHOLE DETAILS)

NO SCALE

RSP ES-5D DATED OCTOBER 30, 2015 SUPERSEDES RSP ES-5D DATED JULY 19, 2013 AND STANDARD PLAN ES-5D DATED MAY 20, 2011 - PAGE 451 OF THE STANDARD PLANS BOOK DATED 2010.

REVISED STANDARD PLAN RSP ES-5D

DATE PLOTTED => 23-AUG-2016
TIME PLOTTED => 06:17

DIST	COUNTY	ROUTE	POST MILES TOTAL PROJECT	SHEET NO.	TOTAL SHEETS
02	Sis	96	R52.5/88.4	108	208

Theresa Gabriel
REGISTERED ELECTRICAL ENGINEER

April 15, 2016
PLANS APPROVAL DATE

REGISTERED PROFESSIONAL ENGINEER Theresa Aziz Gabriel No. E15129 Exp. 6-30-16 ELECTRICAL STATE OF CALIFORNIA

THE STATE OF CALIFORNIA OR ITS OFFICERS OR AGENTS SHALL NOT BE RESPONSIBLE FOR THE ACCURACY OR COMPLETENESS OF SCANNED COPIES OF THIS PLAN SHEET.

TO ACCOMPANY PLANS DATED 06-15-16

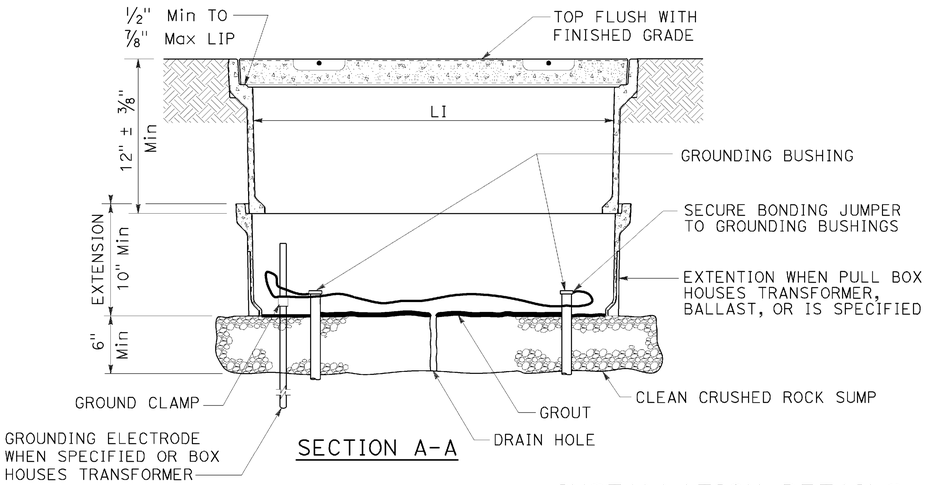

SECTION A-A

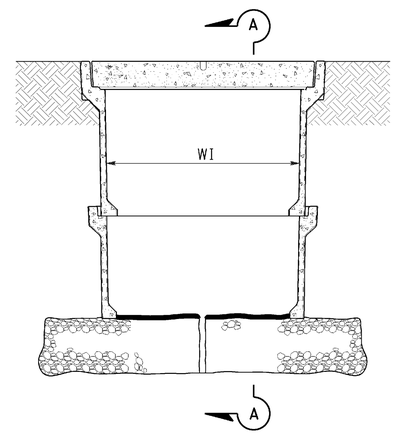

SIDE VIEW

INSTALLATION DETAILS

DETAIL A

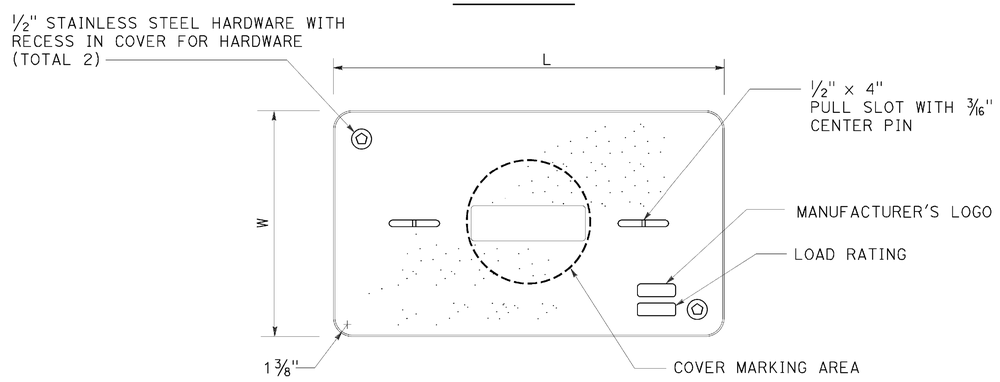

COVER TOP VIEW

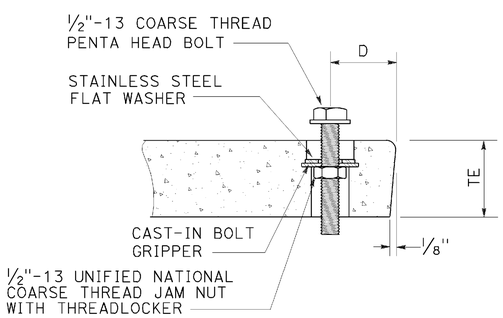

TYPICAL COVER CAPTIVE BOLT

OR SIMILAR

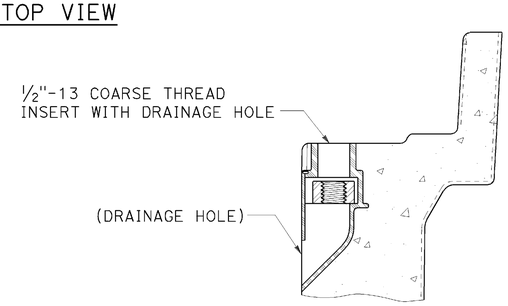

TYPICAL THREADED INSERT

OR SIMILAR

NOTES:

1. The nominal dimensions of the opening in which the cover sets shall be the same as the cover dimensions except the length and width dimensions shall be 1/8" greater.
2. Covers and boxes shall be interchangeable with California standard male and female gages. When interchanged with a standard male or female gage, the top surfaces shall be flush within 1/8". Top outside radius of covers and pull boxes shall have a 1/8" radius.
3. Dimensions for the cover for non-traffic pull box are nominal values.

DIMENSION TABLE

PULL BOX	PULL BOX					COVER				
	MINIMUM DEPTH BOX	MINIMUM DEPTH EXTENSION	MINIMUM WEIGHT	LI Min	WI Min	TE	D	L	W	MINIMUM WEIGHT
No. 3 1/2	12"	N/A	40 lb	1' - 3"	9"	1 3/4"	1 3/4"	1'-3 1/4" - 1'-3 3/8"	10" - 10 1/8"	30 lb
No. 5	12"	10"	55 lb	1' - 8"	11"	2"	1 3/4"	1'-11 1/4"	1'-1 3/4"	60 lb
No. 6	12"	10"	70 lb	2' - 4 1/4"	1' - 3 1/4"	2"	2"	2'-6 1/2"	1'-5 1/2"	85 lb

STATE OF CALIFORNIA
DEPARTMENT OF TRANSPORTATION

ELECTRICAL SYSTEMS (NON-TRAFFIC PULL BOX)

NO SCALE

RSP ES-8A DATED APRIL 15, 2016 SUPERSEDES RSP ES-8A DATED OCTOBER 30, 2015 AND RSP ES-8A DATED JULY 19, 2013 AND RSP ES-8A DATED JANUARY 20, 2012 THAT SUPPLEMENTS THE STANDARD PLANS BOOK DATED 2010.

REVISED STANDARD PLAN RSP ES-8A

2010 REVISED STANDARD PLAN RSP ES-8A

DATE PLOTTED => 23-AUG-2016
TIME PLOTTED => 06:17

Dist	COUNTY	ROUTE	POST MILES TOTAL PROJECT	SHEET No.	TOTAL SHEETS
02	Sis	96	R52.5/88.4	109	208

Theresa Gabriel
REGISTERED ELECTRICAL ENGINEER

October 30, 2015
PLANS APPROVAL DATE

REGISTERED PROFESSIONAL ENGINEER Theresa Aziz Gabriel No. E15129 Exp. 6-30-16 ELECTRICAL STATE OF CALIFORNIA

THE STATE OF CALIFORNIA OR ITS OFFICERS OR AGENTS SHALL NOT BE RESPONSIBLE FOR THE ACCURACY OR COMPLETENESS OF SCANNED COPIES OF THIS PLAN SHEET.

TO ACCOMPANY PLANS DATED 06-15-16

NOTE:

Curves represent the minimum footcandle (FC).

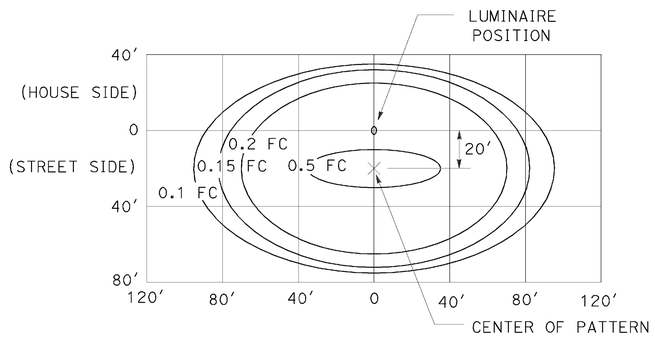

LED LUMINAIRE 165 W

34′ Mounting Height

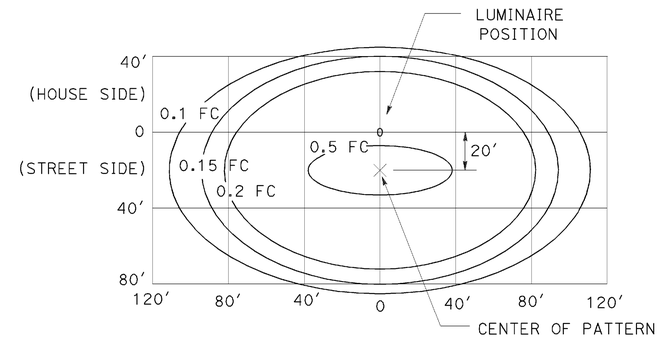

LED LUMINAIRE 235 W

40′ Mounting Height

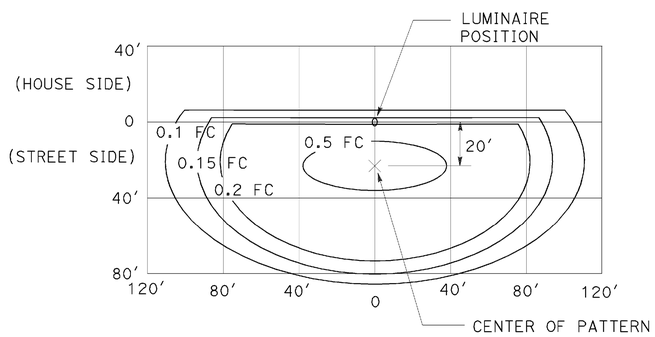

LED LUMINAIRE 235 W

40′ Mounting Height
with back side control

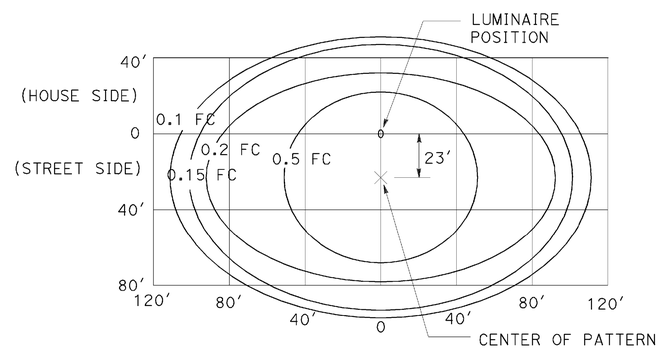

LED LUMINAIRE 300 W

40′ Mounting Height

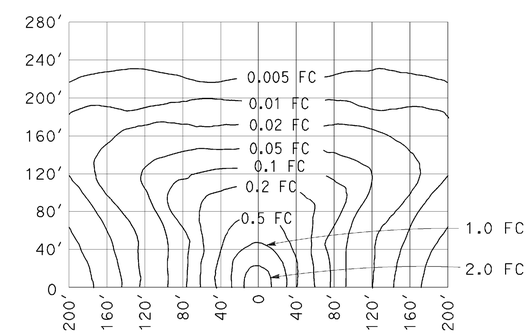

LOW-PRESSURE SODIUM LUMINAIRE 180 W

40′ Mounting Height
Lamp operated at 33,000 lm

STATE OF CALIFORNIA
DEPARTMENT OF TRANSPORTATION

ELECTRICAL SYSTEMS (ISOFOOTCANDLE CURVES)

NO SCALE

RSP ES-10A DATED OCTOBER 30, 2015 SUPERSEDES RSP ES-10A DATED JULY 19, 2013 THAT SUPPLEMENTS THE STANDARD PLANS BOOK DATED 2010.

REVISED STANDARD PLAN RSP ES-10A

2010 REVISED STANDARD PLAN RSP ES-10A

DATE PLOTTED => 23-AUG-2016
TIME PLOTTED => 06:18

Dist	COUNTY	ROUTE	POST MILES TOTAL PROJECT	SHEET No.	TOTAL SHEETS
02	Sis	96	R52.5/88.4	110	208

Theresa Gabriel
REGISTERED ELECTRICAL ENGINEER

April 15, 2016
PLANS APPROVAL DATE

REGISTERED PROFESSIONAL ENGINEER Theresa Aziz Gabriel No. E15129 Exp. 6-30-16 ELECTRICAL STATE OF CALIFORNIA

THE STATE OF CALIFORNIA OR ITS OFFICERS OR AGENTS SHALL NOT BE RESPONSIBLE FOR THE ACCURACY OR COMPLETENESS OF SCANNED COPIES OF THIS PLAN SHEET.

TO ACCOMPANY PLANS DATED 06-15-16

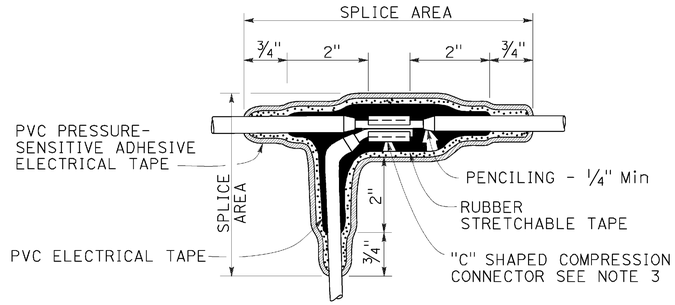

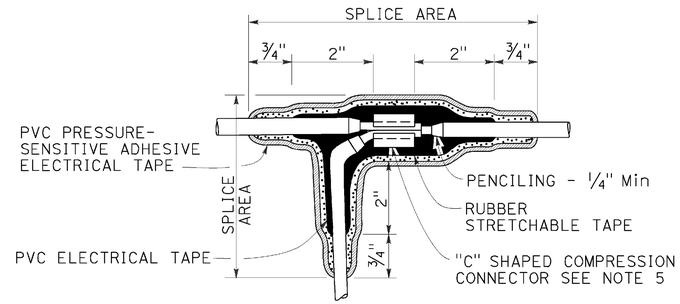

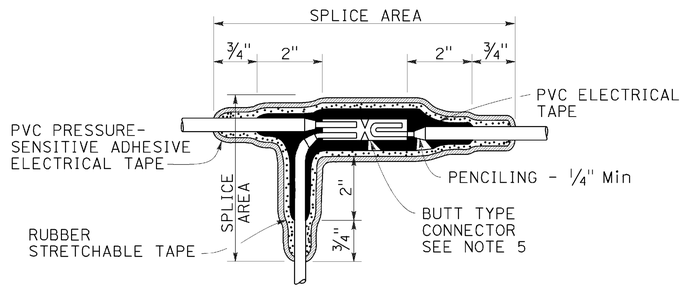

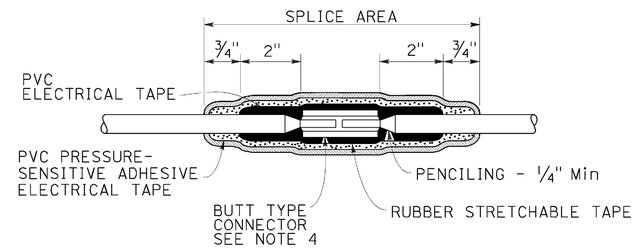

TYPICAL SPLICE INSULATION METHOD B

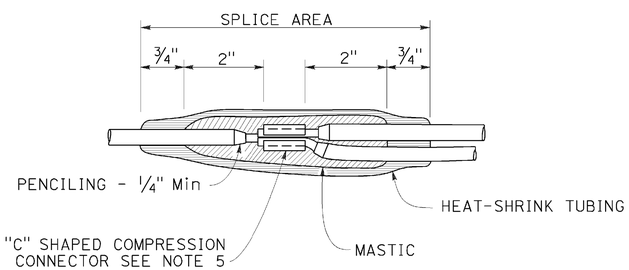

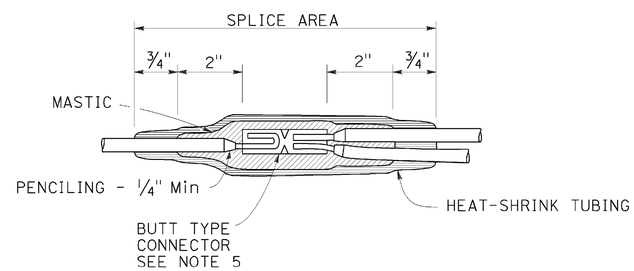

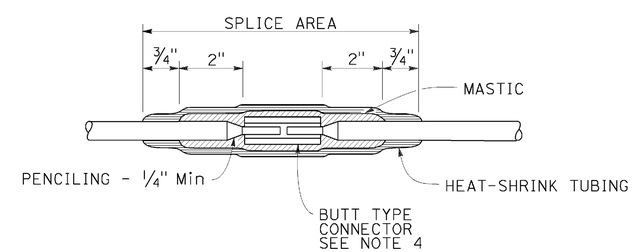

TYPICAL SPLICE INSULATION HEAT-SHRINK TUBING

NOTES:

1. Dimensions are minimum.
2. Rubber tapes shall be rolled after application.
3. Between 1 free-end and 1 through conductor.
4. Between 2 free-end conductors.
5. Between 3 free-end conductors.

STATE OF CALIFORNIA
DEPARTMENT OF TRANSPORTATION

ELECTRICAL SYSTEMS (SPLICE INSULATION METHODS DETAILS)

NO SCALE

RSP ES-13A DATED APRIL 15, 2016 SUPERSEDES RSP ES-13A DATED OCTOBER 30, 2015 AND STANDARD PLAN ES-13A DATED MAY 20, 2011 - PAGE 491 OF THE STANDARD PLANS BOOK DATED 2010.

REVISED STANDARD PLAN RSP ES-13A

2010 REVISED STANDARD PLAN RSP ES-13A

DATE PLOTTED => 23-AUG-2016
TIME PLOTTED => 06:18

DIST	COUNTY	ROUTE	POST MILES TOTAL PROJECT	SHEET No.	TOTAL SHEETS
02	Sis	96	R52.5/88.4	111	208

Mufeed Khalaf 5-27-16
REGISTERED CIVIL ENGINEER DATE

06-15-16
PLANS APPROVAL DATE

REGISTERED PROFESSIONAL ENGINEER Mufeed Khalaf No. 54260 Exp. 12-31-17 CIVIL STATE OF CALIFORNIA

The State of California or its officers or agents shall not be responsible for the accuracy or completeness of scanned copies of this plan sheet.

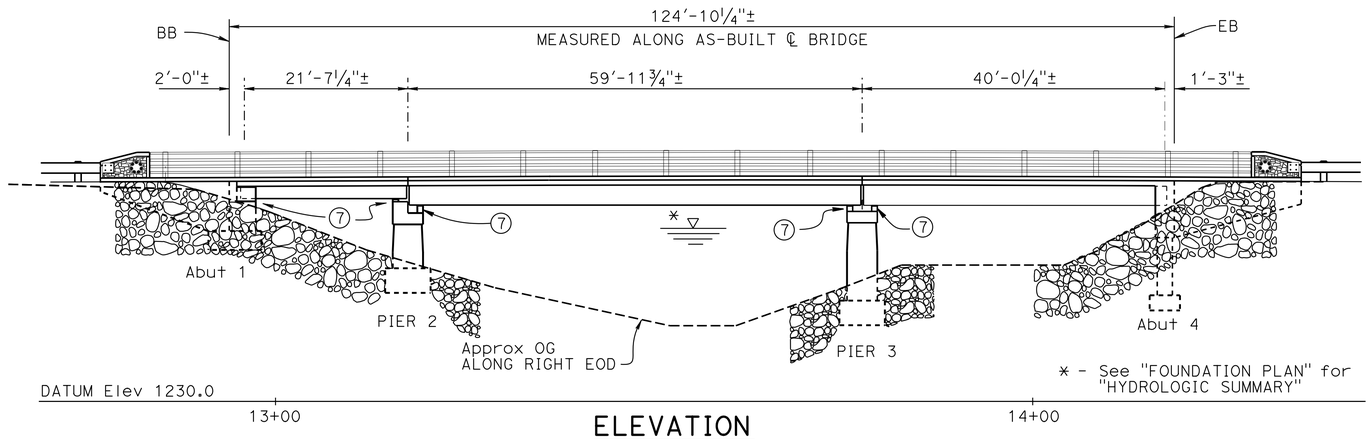

ELEVATION

1" = 10'

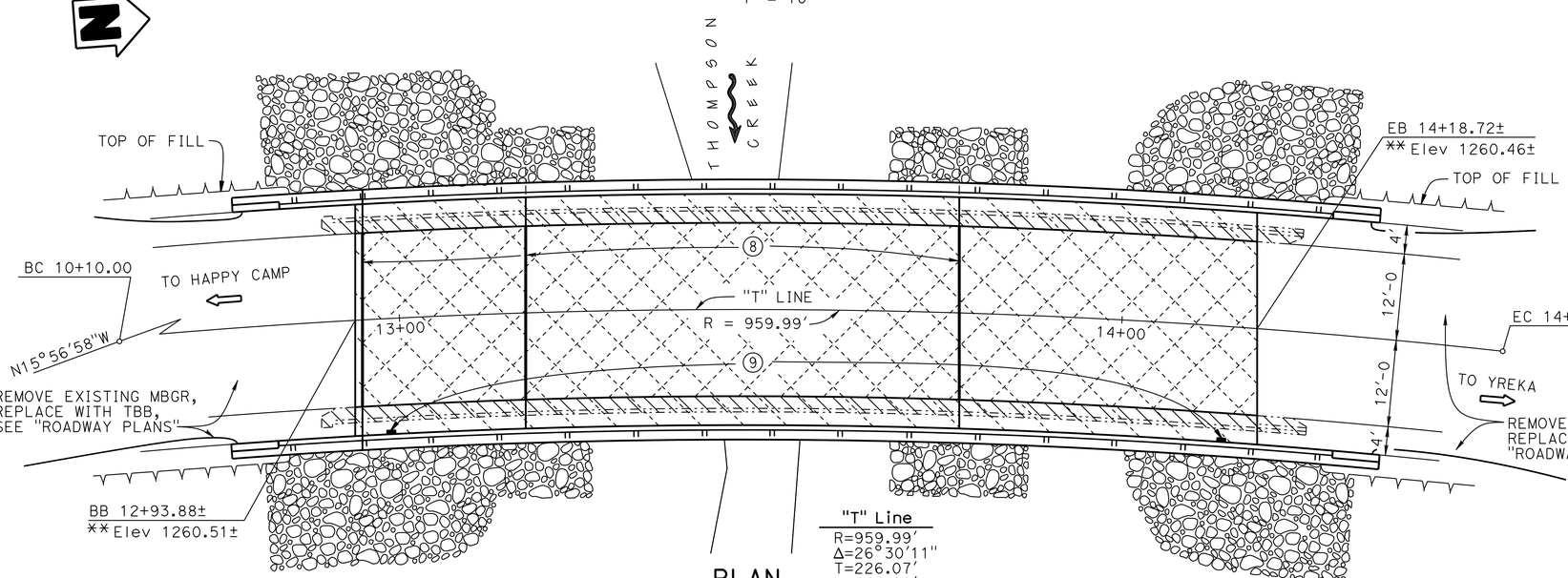

"T" Line
R=959.99'
Δ=26° 30'11"
T=226.07'
L=444.06'

PLAN

1" = 10'

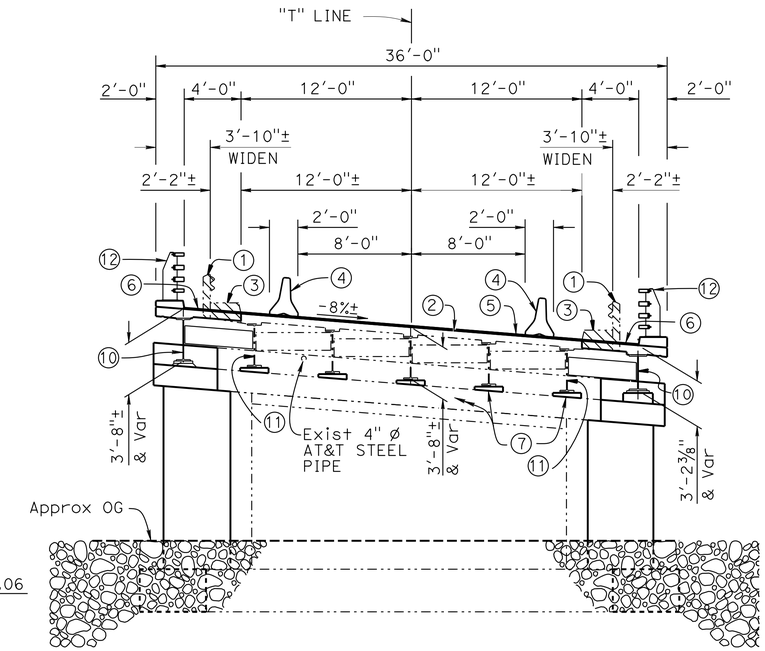

TYPICAL SECTION

3/16" = 1'-0"

LEGEND:

- ** - Elevation shown is at top of existing concrete deck
- Indicates existing bridge
- Indicates new construction
- Indicates new Joint Seal
- Indicates existing bridge removal (portion), Location A
- Indicates limits of remove existing ¾" polyester concrete overlay, remove unsound concrete, and place rapid setting concrete patches
- Indicates limits of prepare concrete deck surface,and place 1" minimum depth Polyester Concrete Overlay
- RSP, see "ROADWAY PLANS"

NOTE:
THE CONTRACTOR MUST VERIFY ALL CONTROLLING FIELD DIMENSIONS BEFORE ORDERING OR FABRICATING ANY MATERIAL.

NOTES:

1. Existing railing to be removed
2. Existing ¾"± Polyester Concrete Overlay to be removed
3. Existing bridge removal (portion)
4. Temporary Railing (Type K), see "ROADWAY PLANS"
5. 1" Polyester Concrete Overlay
6. Match existing slope
7. Catcher Block
8. Clean existing joint and install Type B Joint Seal
9. Deck drain type D-2 (Mod)
10. Steel girder
11. Spot blast clean and paint undercoat
12. California ST-70 Bridge Rail (Mod) W/Surface Texture. For Stain Galvanized Surfaces, see "ROADWAY PLANS"

1. For location of"Bridge Name" and "Bridge Number", see "ROADWAY PLANS"
2. For "GENERAL NOTES" ,"INDEX TO PLANS" and "QUANTITIES", see "INDEX TO PLANS" sheet

Joseph E Downing
DESIGN ENGINEER

	BY	CHECKED
DESIGN	Arturo V Herrera	Mufeed Khalaf
DETAILS	Nancy C Gwynn	Mufeed Khalaf
QUANTITIES	Ashraf Ahmed	Raman Guraya

LOAD & RESISTANCE FACTOR DESIGN — LIVE LOADING: HS20-44 AND ALTERNATIVE AND PERMIT DESIGN LOAD

	BY	CHECKED
LAYOUT	Arturo V Herrera	Mufeed Khalaf
SPECIFICATIONS	Elaheh Mansoubi	PLANS AND SPECS COMPARED: Elaheh Mansoubi

ORIGINAL SCALE IN INCHES FOR REDUCED PLANS 0 1 2 3

STATE OF CALIFORNIA
DEPARTMENT OF TRANSPORTATION

DIVISION OF ENGINEERING SERVICES
STRUCTURE DESIGN
DESIGN BRANCH 3

UNIT: 3578
PROJECT NUMBER & PHASE: 02120000121
CONTRACT NO.: 02-4E6504

BRIDGE NO. 02-0068
POST MILE 52.48

THOMPSON CREEK BRIDGE (WIDEN)
GENERAL PLAN

DISREGARD PRINTS BEARING EARLIER REVISION DATES

REVISION DATES: 3-1-14 2-1-16 1-12-16

SHEET 1 OF 32

STRUCTURES DESIGN GENERAL PLAN SHEET (ENGLISH) (REV.09-01-10)

FILE => 02-0068-a-gp.dgn

P:\proj1\02\4E650_plans\pse\Structures\02-0068-a-gp.dgn

USERNAME => s115152 DATE PLOTTED => 23-AUG-2016 TIME PLOTTED => 06:18

DIST	COUNTY	ROUTE	POST MILES TOTAL PROJECT	SHEET No.	TOTAL SHEETS
02	Sis	96	R52.5/88.4	112	208

Mufeed Khalaf 5-27-16
REGISTERED CIVIL ENGINEER DATE

06-15-16
PLANS APPROVAL DATE

REGISTERED PROFESSIONAL ENGINEER Mufeed Khalaf No. 54260 Exp. 12-31-17 CIVIL STATE OF CALIFORNIA

The State of California or its officers or agents shall not be responsible for the accuracy or completeness of scanned copies of this plan sheet.

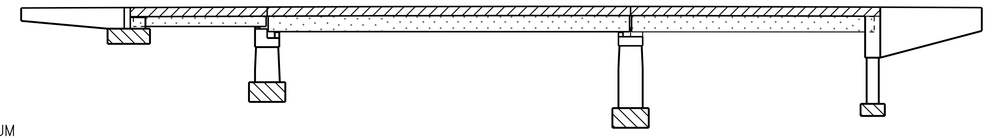

Structural Concrete, Bridge

Structural Concrete, Bridge Footing

Structural Concrete Bridgr (Polymer Fiber) (4000 psi @ 28 days)

Steel girder

QUANTITIES

LEAD COMPLIANCE PLAN	LUMP	SUM
WORK AREA MONITORING (BRIDGE)	LUMP	SUM
PUBLIC SAFETY PLAN	LUMP	SUM
RAPID SETTING CONCRETE (PATCH)	38	CF
REMOVE POLYESTER CONCRETE OVERLAY	2,997	SQFT
REMOVE UNSOUND CONCRETE	38	CF
PREPARE CONCRETE BRIDGE DECK SURFACE	3,995	SQFT
FURNISH POLYESTER CONCRETE OVERLAY	333	CF
PLACE POLYESTER CONCRETE OVERLAY	3,995	SQFT
BRIDGE REMOVAL (PORTION), LOCATION A	LUMP	SUM
STRUCTURE EXCAVATION (BRIDGE)	33	CY
STRUCTURE EXCAVATION (TYPE D)	119	CY
STRUCTURE BACKFILL (BRIDGE)	80	CY
STRUCTURAL CONCRETE, BRIDGE FOOTING	29	CY
STRUCTURAL CONCRETE, BRIDGE	52	CY
STRUCTURAL CONCRETE, BRIDGE (POLYMER FIBER)	35	CY
DRILL AND BOND DOWEL	212	LF
DRILL AND BOND DOWEL (CHEMICAL ADHESIVE)	270	EA
CLEAN EXPANSION JOINT	72	LF
JOINT SEAL (MR 1")	98	LF
BAR REINFORCING STEEL (BRIDGE)	23,550	LB
BAR REINFORCING STEEL (EPOXY COATED) (BRIDGE)	6,766	LB
HEADED BAR REINFORCEMENT	72	EA
FURNISH STRUCTURAL STEEL (BRIDGE)	45,680	LB
ERECT STRUCTURAL STEEL (BRIDGE)	45,680	LB
CLEAN AND PAINT STRUCTURAL STEEL	LUMP	SUM
SPOT BLAST CLEAN AND PAINT UNDERCOAT	82	SQFT
PREPARE AND STAIN CONCRETE	181	SQFT
MISCELLANEOUS METAL (BRIDGE)	180	LB
BRIDGE DECK DRAINAGE SYSTEM	248	LB
CALIFORNIA ST-70 BRIDGE RAIL (MODIFIED)	316	LF

CONCRETE STRENGTH AND TYPE LIMITS

NO SCALE

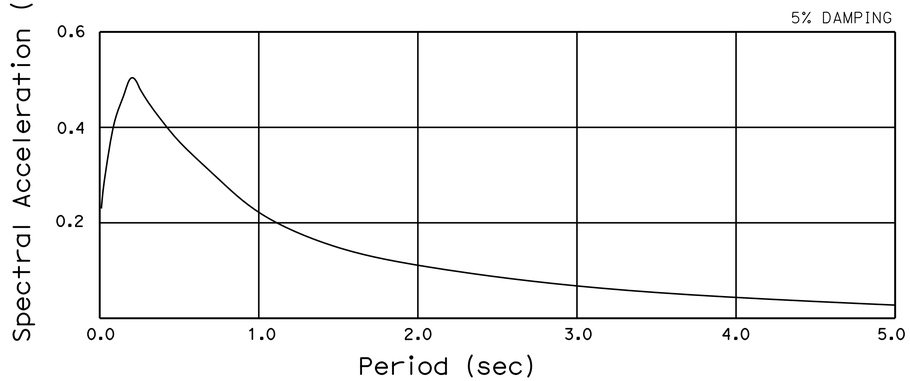

SITE SPECIFIC ARS CURVE

NO SCALE

INDEX TO PLANS

SHEET No.	TITLE
1	GENERAL PLAN
2	INDEX TO PLANS
3	STRUCTURE EXCAVATION AND BACKFILL
4	FOUNDATION PLAN
5	ABUTMENT LAYOUT
6	ABUTMENT 1 DETAILS NO. 1
7	ABUTMENT 1 DETAILS NO. 2
8	ABUTMENT 1 DETAILS NO. 3
9	ABUTMENT 4 DETAILS NO. 1
10	ABUTMENT 4 DETAILS NO. 2
11	ABUTMENT 4 DETAILS NO. 3
12	PIER DETAILS NO. 1
13	PIER DETAILS NO. 2
14	PIER DETAILS NO. 3
15	PIER DETAILS NO. 4
16	TYPICAL SECTION NO. 1
17	TYPICAL SECTION NO. 2
18	MISCELLANEOUS DETAILS
19	GIRDER LAYOUT
20	GIRDER DETAILS
21	JOINT SEAL DETAILS
22	BRIDGE REMOVAL DETAILS NO. 1
23	BRIDGE REMOVAL DETAILS NO. 2
24	CONCRETE SURFACE TEXTURE Det NO. 1
25	CONCRETE SURFACE TEXTURE Det NO. 2
26	CONCRETE SURFACE TEXTURE Det NO. 3
27	CALIFORNIA ST-70 BRIDGE RAIL DETAILS NO. 1
28	CALIFORNIA ST-70 BRIDGE RAIL DETAILS NO. 2
29	CALIFORNIA ST-70 BRIDGE RAIL DETAILS NO. 3
30	CALIFORNIA ST-70 BRIDGE RAIL DETAILS NO. 4
31	LOG OF TEST BORINGS
32	LOG OF TEST BORINGS

GENERAL NOTES

NEW CONSTRUCTION

SPECIFICATIONS:
DESIGN:

Bridge Design Specifications-April 2000 (LFD)
(1996 AASHTO with interim and revisions by CALTRANS)

DEAD LOAD:

Includes 11.67 psf of polyester concrete overlay, No future additional deck overlay allowed

LIVE LOADING:

HS20-44 and permit design load

SEISMIC DESIGN:

See "SITE SPECIFIC ARS CURVE"

REINFORCED CONCRETE:

f'y = 60 ksi
f'c = 3600 psi
n = 9

STRUCTURAL STEEL (new construction):

fy = 36 ksi

STRUCTURAL STEEL (assumed for evaluation of existing structure):

fy = 33 ksi

ANCHOR RODS

F1554 Grade 55

SPREAD FOOTING DATA TABLE

Support Location	Working Stress Design (WSD)		Load Factor Design (LFD)		
	Permissible Gross Contact Stress (Settlement) (ksf)	Allowable Gross Bearing Capacity (ksf)	Permissible Net Contact Stress (Settlement) (ksf)	Factored Gross Nominal Bearing Resistance (Groups I through VI) φ_b= 0.05 (ksf)	Factored Gross Nominal Bearing Resistance (Groups I through VI) φ_b= 1.00 (ksf)
Abutment 1	40.0	6.0	N/A	N/A	N/A
Pier 2	N/A	N/A	40.0	10.0	14.0
Pier 3	N/A	N/A	40.0	10.0	14.0
Abutment 4	40.0	8.3	N/A	N/A	N/A

STANDARD PLANS DATED 2010

	A10A	ABBREVIATIONS (SHEET 1 OF 2)
RSP	A10B	ABBREVIATIONS (SHEET 2 OF 2)
	A10C	LINES AND SYMBOLS (SHEET 1 OF 3)
	A10D	LINES AND SYMBOLS (SHEET 2 OF 3)
	A10E	LINES AND SYMBOLS (SHEET 3 OF 3)
RSP	A10F	LEGEND - SOIL (SHEET 1 OF 2)
RSP	A10G	LEGEND - SOIL (SHEET 2 OF 2)
	A10H	LEGEND - ROCK
RSP	A77U1	MIDWEST GUARDRAIL SYSTEM CONNECTION To BRIDGE RAILINGS WITHOUT SIDEWALKS DETAILS NO. 1
RSP	A77U2	MIDWEST GUARDRAIL SYSTEM CONNECTION To BRIDGE RAILINGS WITHOUT SIDEWALKS DETAILS NO. 2
	A78F1	DOUBLE THRIE BEAM BARRIER CONNECTION To BRIDGE RAILINGS WITHOUT SIDEWALKS
	A78F2	SINGLE THRIE BEAM BARRIER CONNECTION To BRIDGE RAILINGS WITHOUT SIDEWALKS
	B0-1	BRIDGE DETAILS
	B0-3	BRIDGE DETAILS
RSP	B6-21	JOINT SEALS (MAXIMUM MOVEMENT RATING = 2")
	B7-6	DECK DRAINS TYPES D-1 AND D-2

STANDARD PLAN SHEET No.

DETAIL No.

	BY	CHECKED
DESIGN	Art V Herrera	Mufeed Khalaf
DETAILS	Shadi Motalebi	Mufeed Khalaf
QUANTITIES	Ashraf Ahmed	Raman Guraya

STATE OF CALIFORNIA
DEPARTMENT OF TRANSPORTATION

DIVISION OF ENGINEERING SERVICES
STRUCTURE DESIGN
DESIGN BRANCH 3

BRIDGE NO. 02-0068
POST MILE 52.48

THOMPSON CREEK BRIDGE (WIDEN)
INDEX TO PLANS

STRUCTURES DESIGN DETAIL SHEET (ENGLISH) (REV. 09-01-10)

ORIGINAL SCALE IN INCHES FOR REDUCED PLANS 0 1 2 3

UNIT: 3578
PROJECT NUMBER & PHASE: 02120000121
CONTRACT NO.: 02-4E6504

DISREGARD PRINTS BEARING EARLIER REVISION DATES

REVISION DATES 4-4-14 4-15-16 5-20-16

SHEET 2 OF 32

FILE => 02-0068-a-itpl.dgn

USERNAME => s115152 DATE PLOTTED => 23-AUG-2016 TIME PLOTTED => 06:19

DIST	COUNTY	ROUTE	POST MILES TOTAL PROJECT	SHEET No.	TOTAL SHEETS
02	Sis	96	R52.5/88.4	113	208

Mufeed Khalaf 5-27-16
REGISTERED CIVIL ENGINEER DATE

06-15-16
PLANS APPROVAL DATE

REGISTERED PROFESSIONAL ENGINEER
Mufeed Khalaf
No. 54260
Exp. 12-31-17
CIVIL
STATE OF CALIFORNIA

The State of California or its officers or agents shall not be responsible for the accuracy or completeness of scanned copies of this plan sheet.

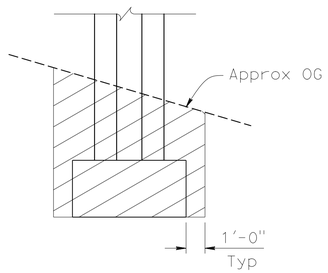

PIER LOCATIONS
1/4" = 1'-0"

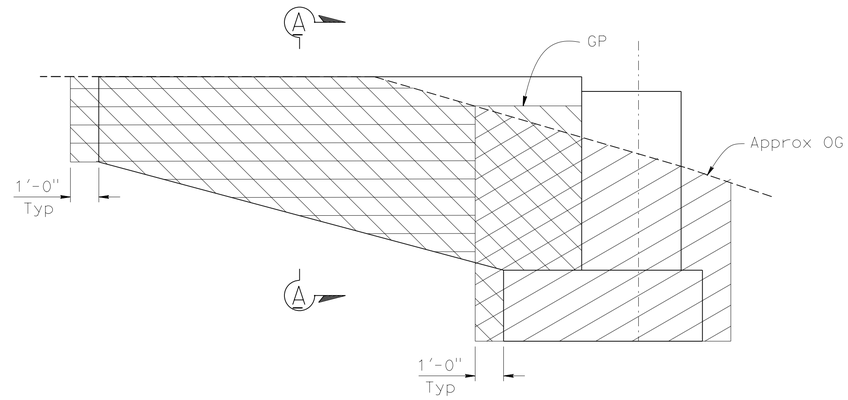

ABUTMENT 1 AND WINGWALL
3/8" = 1'-0"

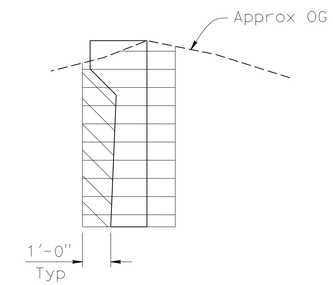

NOTE:
Abutment 1 right side wingwall shown, left side and Abutment 4 wingwall similar

SECTION A-A
3/8" = 1'-0"

LEGEND:

- Structure Excavation (Type D)
- Structure Excavation (Bridge)
- Structure Backfill (Bridge)

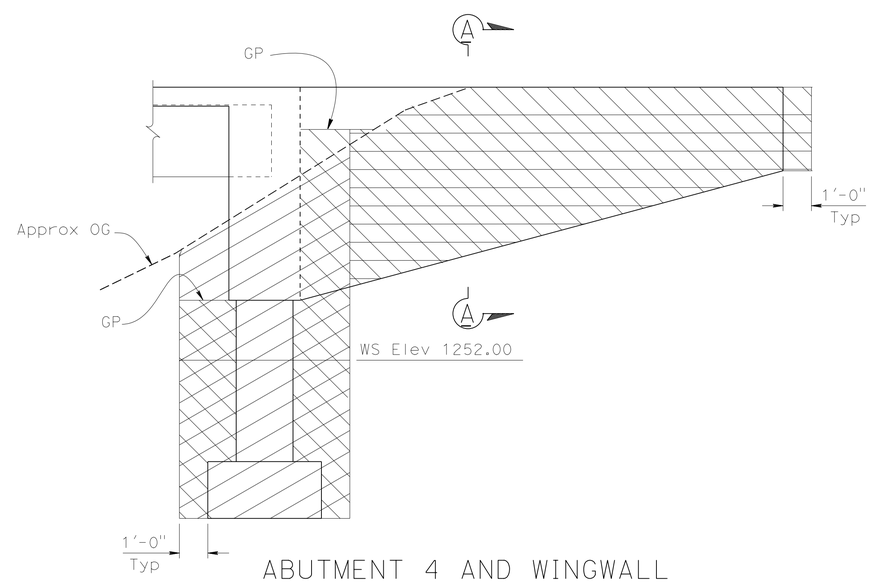

ABUTMENT 4 AND WINGWALL
3/8" = 1'-0"

NOTE:
THE CONTRACTOR MUST VERIFY ALL CONTROLLING FIELD DIMENSIONS BEFORE ORDERING OR FABRICATING ANY MATERIAL.

	BY	CHECKED
DESIGN	Art V Herrera	Mufeed Khalaf
DETAILS	Shadi Motalebi	Mufeed Khalaf
QUANTITIES	Ashraf Ahmed	Raman Guraya

STATE OF CALIFORNIA
DEPARTMENT OF TRANSPORTATION

DIVISION OF ENGINEERING SERVICES
STRUCTURE DESIGN
DESIGN BRANCH 3

BRIDGE NO. 02-0068
POST MILE 52.48

THOMPSON CREEK BRIDGE (WIDEN)
STRUCTURE EXCAVATION AND BACKFILL

STRUCTURES DESIGN DETAIL SHEET (ENGLISH) (REV. 09-01-10)

ORIGINAL SCALE IN INCHES FOR REDUCED PLANS 0 1 2 3

UNIT: 3578
PROJECT NUMBER & PHASE: 02120000121
CONTRACT NO.: 02-4E6504

DISREGARD PRINTS BEARING EARLIER REVISION DATES

REVISION DATES 1-12-16 5-10-16 5-19-16 ..... SHEET 3 OF 32

FILE => 02-0068-b-ex.dgn

USERNAME => s115152 DATE PLOTTED => 23-AUG-2016 TIME PLOTTED => 06:19

DIST	COUNTY	ROUTE	POST MILES TOTAL PROJECT	SHEET No.	TOTAL SHEETS
02	Sis	96	R52.5/88.4	114	208

Mufeed Khalaf 5-27-16
REGISTERED CIVIL ENGINEER DATE

06-15-16
PLANS APPROVAL DATE

REGISTERED PROFESSIONAL ENGINEER Mufeed Khalaf No. 54260 Exp. 12-31-17 CIVIL STATE OF CALIFORNIA

The State of California or its officers or agents shall not be responsible for the accuracy or completeness of electronic copies of this plan sheet.

CURVE DATA

No. Ⓔ	R	Δ	T	L
A	959.99	26°30'11"	226.07	444.06
B	1194.25	09°51'44"	103.04	205.57

SCOUR DATA TABLE

SUPPORT No.	LONG TERM (DEGRADATION & CONTRACTION) SCOUR Elev (ft)	SHORT TERM (LOCAL) SCOUR DEPTH (ft)
Abut 1	N/A	4.0
Pier 2	N/A	10.8
Pier 3	N/A	9.2
Abut 4	N/A	4.0

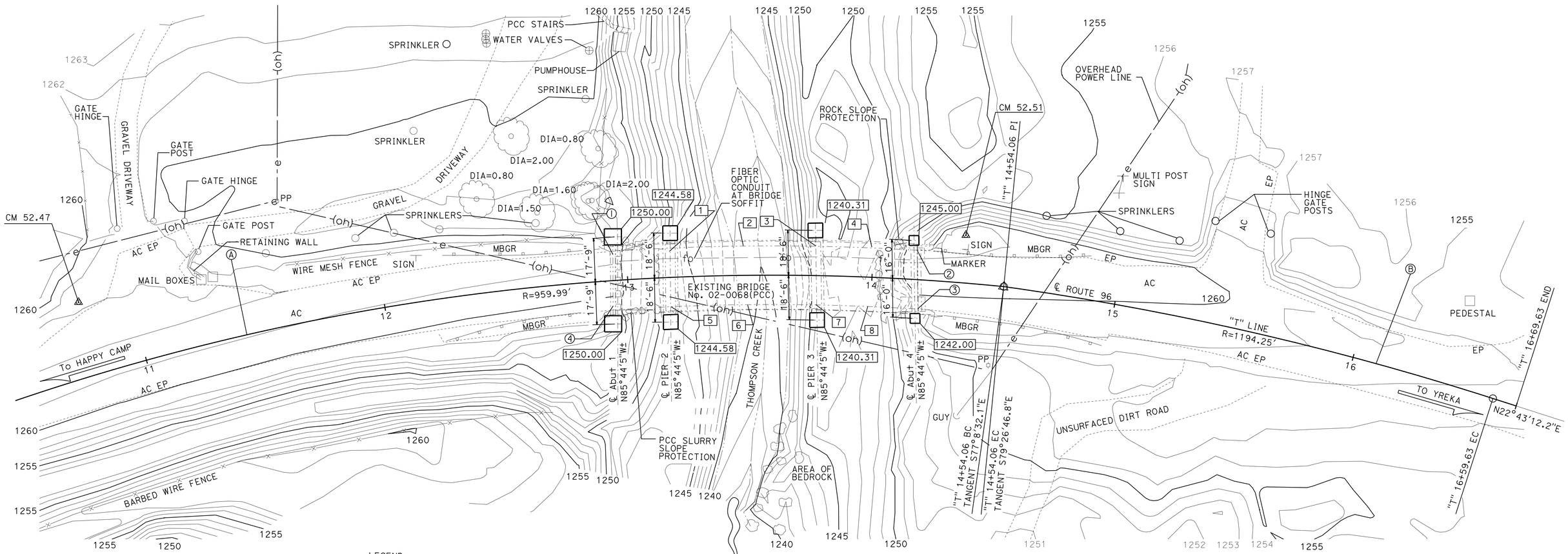

LEGEND:

Indecates bottom of footing elevation, not all minor contoure shown for clarity

SURVEY CONTROL

CM 52.47
Fnd ¾" Rebar w/ Alum Cap
30.53 FT Lt "T" LINE ℄ Rte 96
Sta 10+80.18
N 2,564,607.48
E 6,204,658.87
Elev = 1261.64

CM 52.51
Fnd ¾" Rebar w/ Alum Cap
19.58 FT Lt "T" LINE ℄ Rte 96
Sta 14+36.91
N 2,564,971.55
E 6,204,662.55
Elev = 1261.13

Bridge Location #02-0068

① - 10.66 Lt. ℄ "T" LINE, Sta.12+94.66, Elev.=1261.29±(PCC)
② - 12.17 Lt. ℄ "T" LINE, Sta.14+17.67, Elev.=1261.29±(PCC)
③ - 11.88 Rt. ℄ "T" LINE, Sta.14+19.51, Elev.=1259.62±(PCC)
④ - 10.42 Rt. ℄ "T" LINE, Sta.12+93.29, Elev.=1259.69±(PCC)

DECK ELEVATIONS

1 - 1261.41
2 - 1261.55
3 - 1261.58
4 - 1261.47
5 - 1259.62
6 - 1259.67
7 - 1259.70
8 - 1259.62

HYDROLOGIC / HYDRAULIC DATA SUMMARY

DRAINAGE AREA: 36.3 SQUARE MILES

	DESIGN FLOOD	BASE FLOOD
FREQUENCY (YEARS)	50	100
DISCHARGE (CUBIC FEET PER SECOND)	9935	12205
WATER SURFACE ELEV. (FEET)	1262.96	1263.35

FLOOD PLAIN DATA ARE BASED UPON INFORMATION AVAILABLE WHEN THE PLANS WERE PREPARED AND ARE SHOWN TO MEET FEDERAL REQUIREMENTS. THE ACCURACY OF SAID INFORMATION IS NOT WARRANTED BY THE STATE AND INTERESTED OR AFFECTED PARTIES SHOULD MAKE THEIR OWN INVESTIGATIONS.

PRELIMINARY INVESTIGATION SECTION

SCALE	VERT.DATUM NAVD88	PHOTOGRAMMETRY AS OF: X			
1"=20'	HORZ.DATUM NAD83	SURVEYED	BY DISTRICT	CHECKED	BY J. BORDEN/S. SOU
ALIGNMENT TIES Dist TRAVERSE SHEET		DRAFTED	BY L. YOUNG 4/2014	CHECKED	BY S. SOU 5/2014

DESIGN	BY Art V Herrera	CHECKED Mufeed Khalaf
DETAILS	BY Shadi Motalebi	CHECKED Mufeed Khalaf
QUANTITIES	BY Ashraf Ahmed	CHECKED Raman Guraya

STATE OF CALIFORNIA
DEPARTMENT OF TRANSPORTATION

DIVISION OF ENGINEERING SERVICES
STRUCTURE DESIGN
DESIGN BRANCH 3

BRIDGE NO. 02-0068
POST MILE 52.48

THOMPSON CREEK BRIDGE (WIDEN)
FOUNDATION PLAN

STRUCTURES FOUNDATION PLAN SHEET (ENGLISH) (REV. 09-01-10)

ORIGINAL SCALE IN INCHES FOR REDUCED PLANS 0 1 2 3

UNIT: 3646
PROJECT NUMBER & PHASE: 0212000012 1
CONTRACT NO.: 02-4E6504

DISREGARD PRINTS BEARING EARLIER REVISION DATES

REVISION DATES 5-27-14 5-22-14 11-3-15 3-2-16

SHEET 4 OF 32

FILE => 02-0068-e-fp101.dgn

USERNAME => s115152 DATE PLOTTED => 23-AUG-2016 TIME PLOTTED => 06:19

DIST	COUNTY	ROUTE	POST MILES TOTAL PROJECT	SHEET No.	TOTAL SHEETS
02	Sis	96	R52.5/88.4	115	208

Mufeed Khalaf 5-27-16
REGISTERED CIVIL ENGINEER DATE

06-15-16
PLANS APPROVAL DATE

REGISTERED PROFESSIONAL ENGINEER
Mufeed Khalaf
No. 54260
Exp. 12-31-17
CIVIL
STATE OF CALIFORNIA

The State of California or its officers or agents shall not be responsible for the accuracy or completeness of scanned copies of this plan sheet.

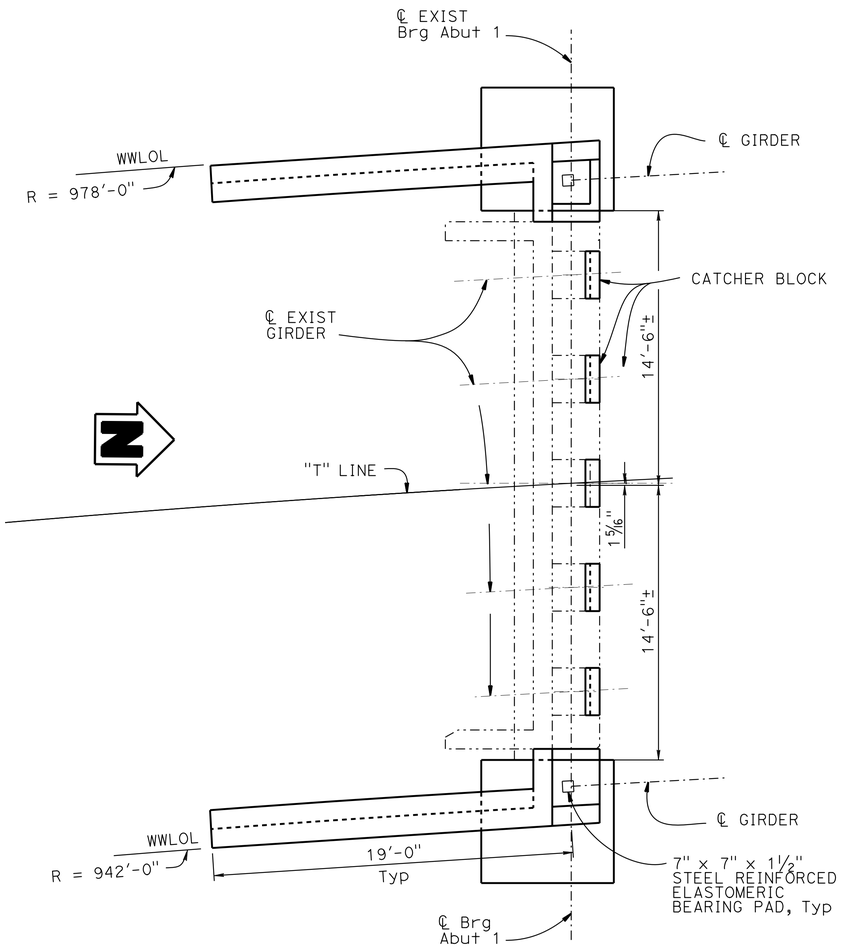

PLAN

¼" = 1'-0"

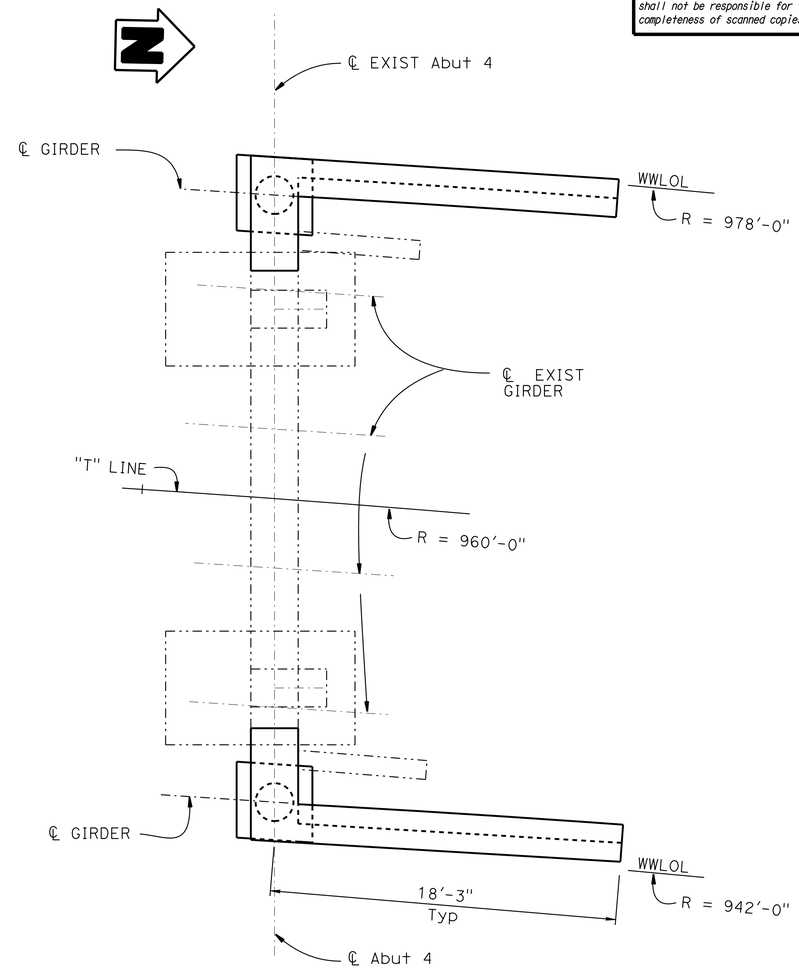

NOTES:

1. Superstructure not shown
2. For wingwall details, see "ABUTMENT 1 DETAILS NO. 2" sheet

NOTE:
THE CONTRACTOR MUST VERIFY ALL CONTROLLING FIELD DIMENSIONS BEFORE ORDERING OR FABRICATING ANY MATERIAL.

	BY	CHECKED
DESIGN	Art V Herrera	Mufeed Khalaf
DETAILS	Shadi Motalebi	Mufeed Khalaf
QUANTITIES	Ashraf Ahmed	Raman Guraya

STATE OF CALIFORNIA
DEPARTMENT OF TRANSPORTATION

DIVISION OF ENGINEERING SERVICES
STRUCTURE DESIGN
DESIGN BRANCH 3

BRIDGE NO. 02-0068
POST MILE 52.48

THOMPSON CREEK BRIDGE (WIDEN)
ABUTMENT LAYOUT

STRUCTURES DESIGN DETAIL SHEET (ENGLISH) (REV. 09-01-10)

ORIGINAL SCALE IN INCHES FOR REDUCED PLANS 0 1 2 3

UNIT: 3578
PROJECT NUMBER & PHASE: 02120000121
CONTRACT NO.: 02-4E6504

DISREGARD PRINTS BEARING EARLIER REVISION DATES

REVISION DATES 12-29-15 12-29-15

SHEET 5 OF 32

FILE => 02-0068-f-a01det.dgn

USERNAME => s115152 DATE PLOTTED => 23-AUG-2016 TIME PLOTTED => 08:19

DIST	COUNTY	ROUTE	POST MILES TOTAL PROJECT	SHEET No.	TOTAL SHEETS
02	Sis	96	R52.5/88.4	116	208

Mufeed Khalaf 5-27-16
REGISTERED CIVIL ENGINEER DATE

06-15-16
PLANS APPROVAL DATE

REGISTERED PROFESSIONAL ENGINEER Mufeed Khalaf No. 54260 Exp. 12-31-17 CIVIL STATE OF CALIFORNIA

The State of California or its officers or agents shall not be responsible for the accuracy or completeness of scanned copies of this plan sheet.

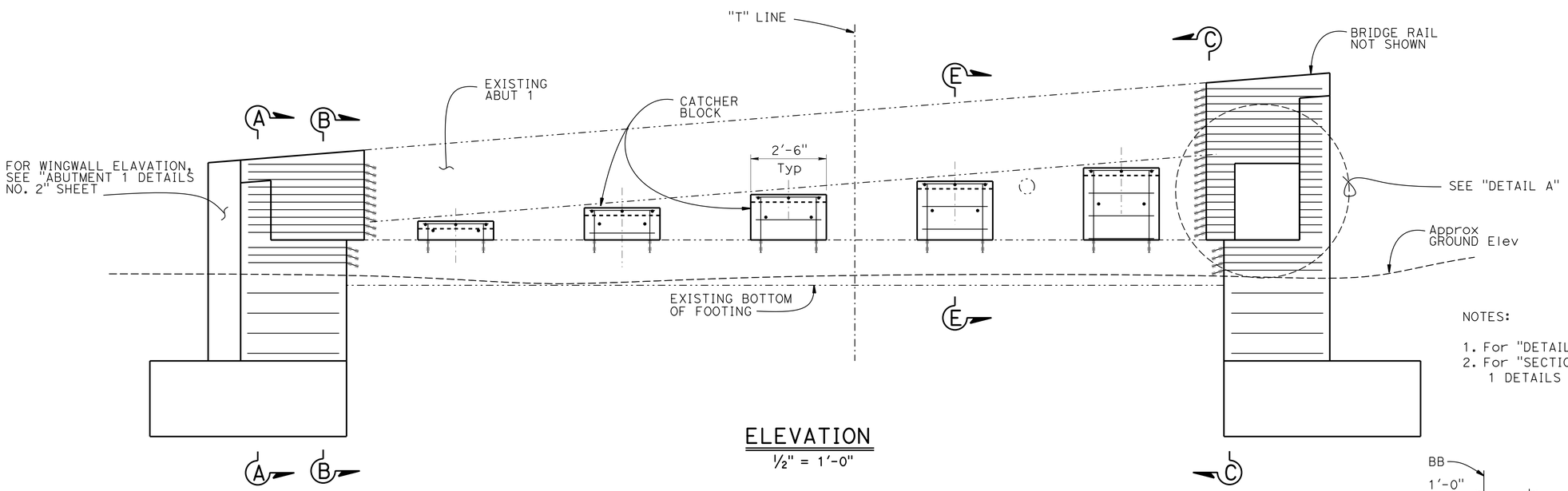

ELEVATION
½" = 1'-0"

NOTES:

1. For "DETAIL A", see "ABUTMENT 1 DETAILS NO.2" sheet
2. For "SECTION C-C" and "Section E-E", see "ABUTMENT 1 DETAILS NO.2" sheet

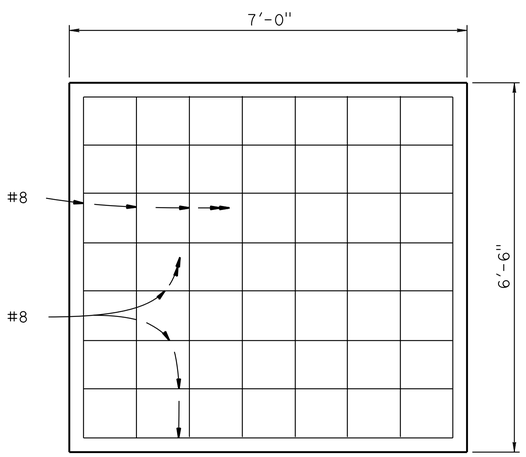

FOOTING PLAN
¾" = 1'-0"

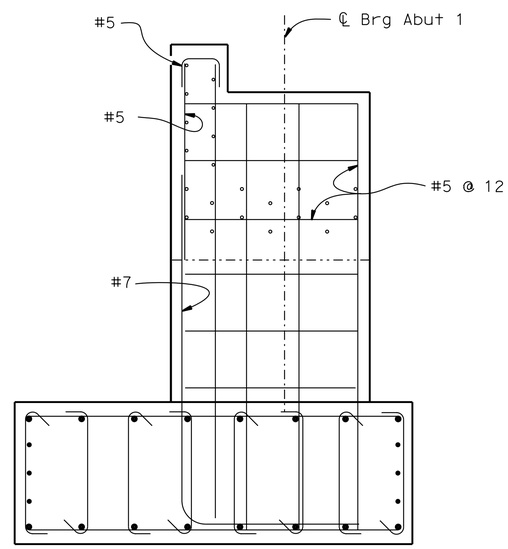

SECTION A-A
¾" = 1'-0"

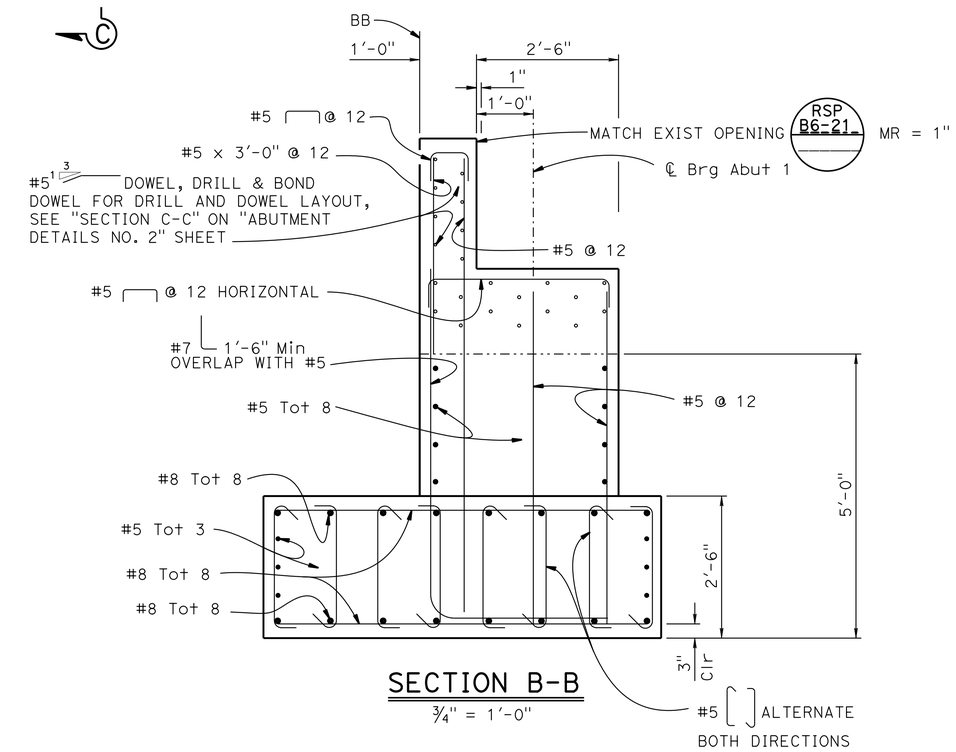

SECTION B-B
¾" = 1'-0"

NOTE:
THE CONTRACTOR MUST VERIFY ALL CONTROLLING FIELD DIMENSIONS BEFORE ORDERING OR FABRICATING ANY MATERIAL.

	BY	CHECKED
DESIGN	Art V Herrera	Mufeed Khalaf
DETAILS	Shadi Motalebi	Mufeed Khalaf
QUANTITIES	Ashraf Ahmed	Raman Guraya

STATE OF CALIFORNIA
DEPARTMENT OF TRANSPORTATION

DIVISION OF ENGINEERING SERVICES
STRUCTURE DESIGN
DESIGN BRANCH 3

BRIDGE NO. 02-0068
POST MILE 52.48

THOMPSON CREEK BRIDGE (WIDEN)
ABUTMENT 1 DETAILS NO. 1

STRUCTURES DESIGN DETAIL SHEET (ENGLISH) (REV. 09-01-10)

ORIGINAL SCALE IN INCHES FOR REDUCED PLANS 0 1 2 3

UNIT: 3578
PROJECT NUMBER & PHASE: 02120000121
CONTRACT NO.: 02-4E6504

DISREGARD PRINTS BEARING EARLIER REVISION DATES

REVISION DATES 2-24-14 ..... 1-12-16 12-15-16

SHEET 6 OF 32

FILE => 02-0068-f-a01det01.dgn

USERNAME => s115152 DATE PLOTTED => 23-AUG-2016 TIME PLOTTED => 06:19

DIST	COUNTY	ROUTE	POST MILES TOTAL PROJECT	SHEET No.	TOTAL SHEETS
02	Sis	96	R52.5/88.4	118	208

Mufeed Khalaf 5-27-16
REGISTERED CIVIL ENGINEER DATE

06-15-16
PLANS APPROVAL DATE

REGISTERED PROFESSIONAL ENGINEER Mufeed Khalaf No. 54260 Exp. 12-31-17 CIVIL STATE OF CALIFORNIA

The State of California or its officers or agents shall not be responsible for the accuracy or completeness of scanned copies of this plan sheet.

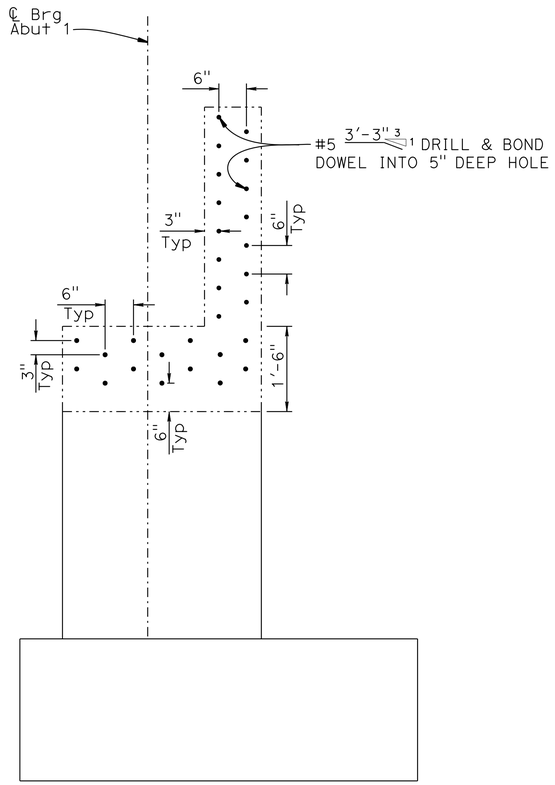

SECTION C-C

3/4" = 1'-0"

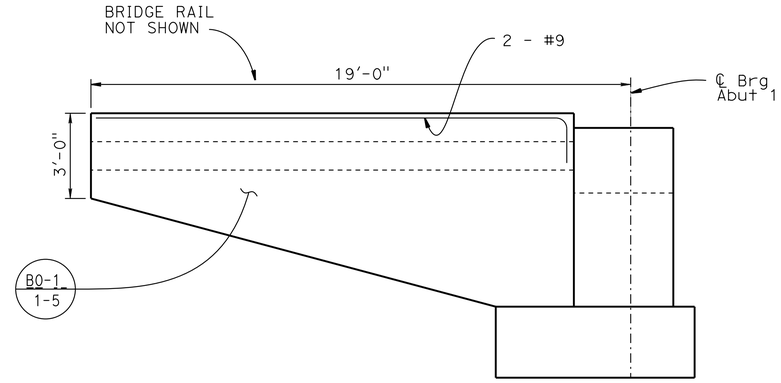

WINGWALL ELEVATION

3/8" = 1'-0"

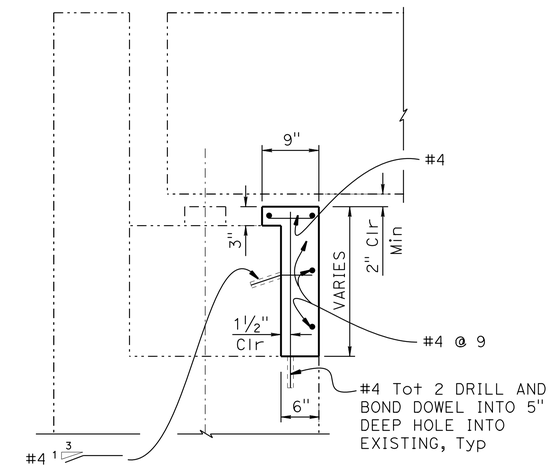

SECTION E-E

1" =1'-0"

NOTE:

Catcher block height varies. Maintain 2" clearance from top of catcher block and bottom of girder

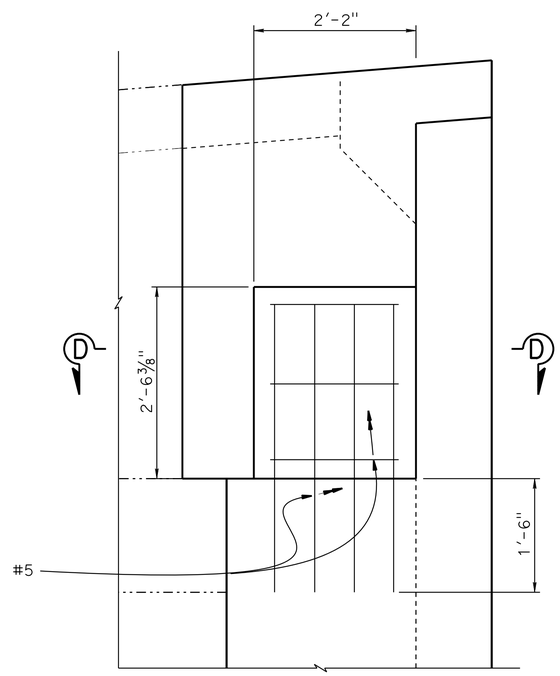

DETAIL A

1" = 1'-0"

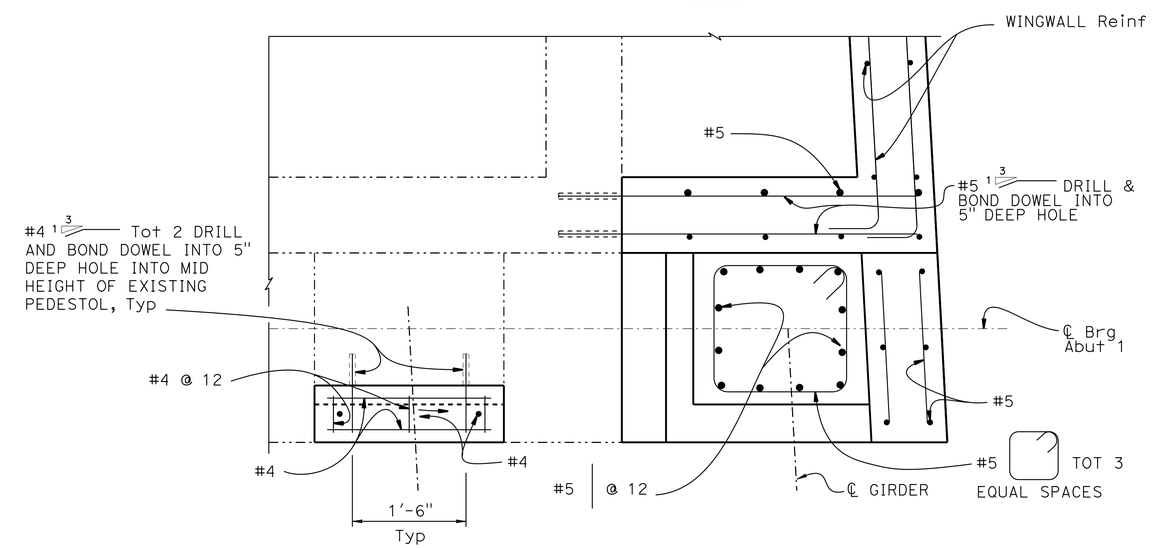

SECTION D-D

1" =1'-0"

NOTE:
THE CONTRACTOR MUST VERIFY ALL CONTROLLING FIELD DIMENSIONS BEFORE ORDERING OR FABRICATING ANY MATERIAL.

	BY	CHECKED
DESIGN	Art V Herrera	Mufeed Khalaf
DETAILS	Shadi Motalebi	Mufeed Khalaf
QUANTITIES	Ashraf Ahmed	Raman Guraya

STATE OF CALIFORNIA
DEPARTMENT OF TRANSPORTATION

DIVISION OF ENGINEERING SERVICES
STRUCTURE DESIGN
DESIGN BRANCH 3

BRIDGE NO. 02-0068
POST MILE 52.48

THOMPSON CREEK BRIDGE (WIDEN)
ABUTMENT 1 DETAILS NO. 2

STRUCTURES DESIGN DETAIL SHEET (ENGLISH) (REV. 09-01-10)

ORIGINAL SCALE IN INCHES FOR REDUCED PLANS 0 1 2 3

UNIT: 3578
PROJECT NUMBER & PHASE: 02120000121
CONTRACT NO.: 02-4E6504

DISREGARD PRINTS BEARING EARLIER REVISION DATES

REVISION DATES 2-1-15 2-2-16 1-13-16 SHEET 7 OF 32

FILE => 02-0068-f-a01det02.dgn

USERNAME => s115152 DATE PLOTTED => 23-AUG-2016 TIME PLOTTED => 06:19

DIST	COUNTY	ROUTE	POST MILES TOTAL PROJECT	SHEET No.	TOTAL SHEETS
02	Sis	96	R52.5/88.4	118	208

Mufeed Khalaf 5-27-16
REGISTERED CIVIL ENGINEER DATE

06-15-16
PLANS APPROVAL DATE

REGISTERED PROFESSIONAL ENGINEER
Mufeed Khalaf
No. 54260
Exp. 12-31-17
CIVIL
STATE OF CALIFORNIA

The State of California or its officers or agents shall not be responsible for the accuracy or completeness of scanned copies of this plan sheet.

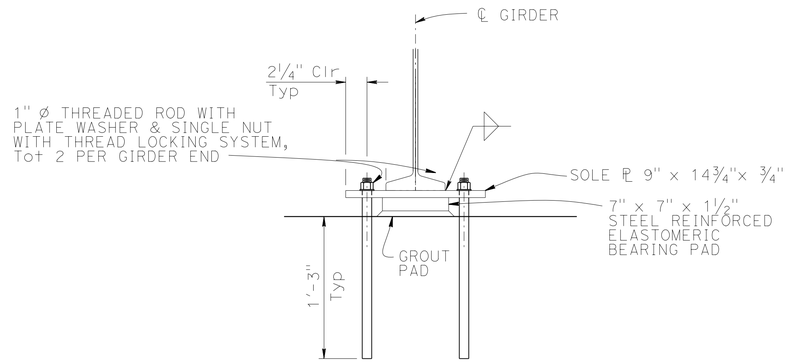

BEARING PAD DETAIL

1½" = 1'-0"

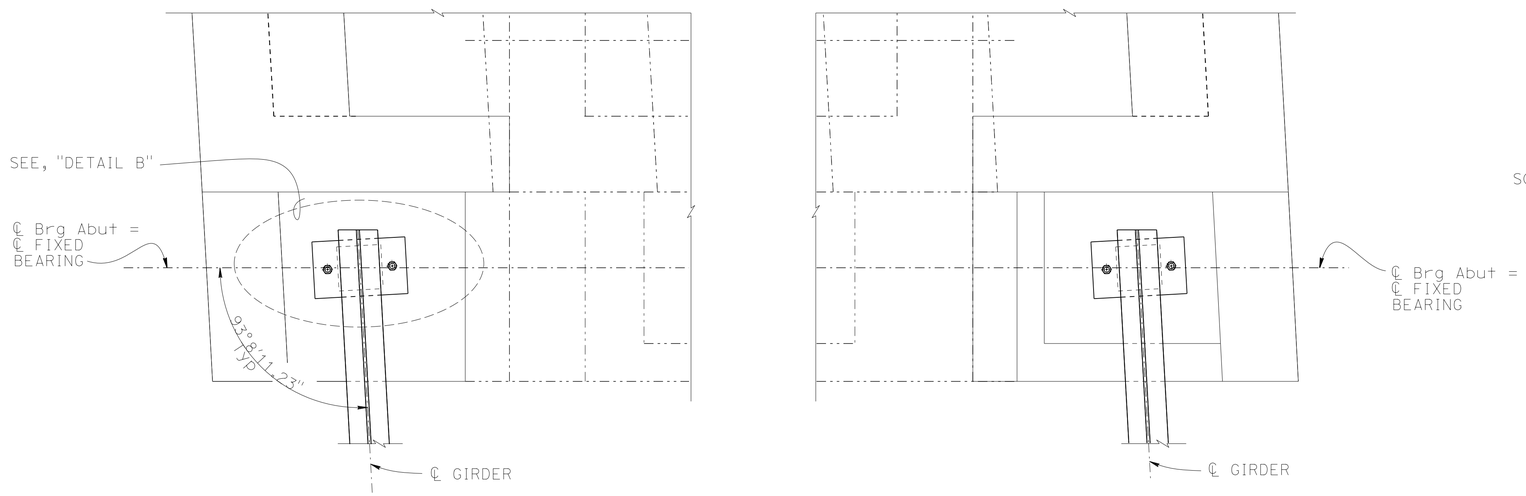

PART PLAN

1" =1'-0"

NOTE:

Abutment 1 Bearings are fixed

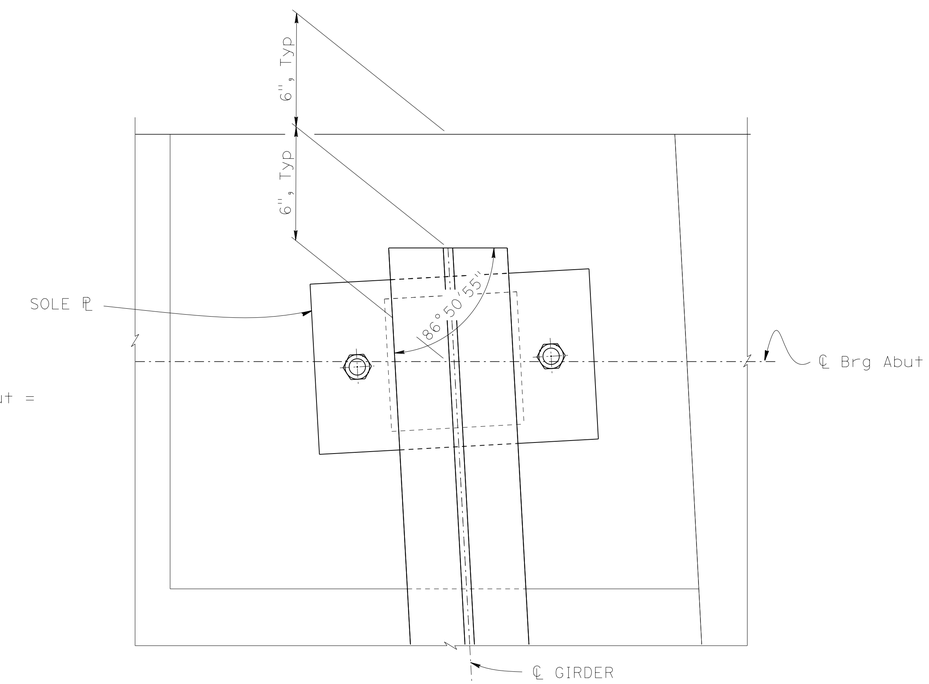

DETAIL B

1½" = 1'-0"

NOTE:
THE CONTRACTOR MUST VERIFY ALL CONTROLLING FIELD DIMENSIONS BEFORE ORDERING OR FABRICATING ANY MATERIAL.

	BY	CHECKED
DESIGN	Art V Herrera	Mufeed Khalaf
DETAILS	Shadi Motalebi	Mufeed Khalaf
QUANTITIES	Ashraf Ahmed	Raman Guraya

STATE OF CALIFORNIA
DEPARTMENT OF TRANSPORTATION

DIVISION OF ENGINEERING SERVICES
STRUCTURE DESIGN
DESIGN BRANCH 3

BRIDGE NO. 02-0068
POST MILE 52.48

THOMPSON CREEK BRIDGE (WIDEN)
ABUTMENT 1 DETAILS NO. 3

STRUCTURES DESIGN DETAIL SHEET (ENGLISH) (REV. 09-01-10)

ORIGINAL SCALE IN INCHES FOR REDUCED PLANS 0 1 2 3

UNIT: 3578
PROJECT NUMBER & PHASE: 02120000121
CONTRACT NO.: 02-4E6504

DISREGARD PRINTS BEARING EARLIER REVISION DATES

REVISION DATES: 5-22-15 10-15-15 12-28-15 2-2-16

SHEET 8 OF 32

FILE => 02-0068-f-a01det03.dgn

USERNAME => s115152 DATE PLOTTED => 23-AUG-2016 TIME PLOTTED => 06:19

DIST	COUNTY	ROUTE	POST MILES TOTAL PROJECT	SHEET No.	TOTAL SHEETS
02	Sis	96	R52.5/88.4	119	208

Mufeed Khalaf 5-27-16
REGISTERED CIVIL ENGINEER DATE

06-15-16
PLANS APPROVAL DATE

REGISTERED PROFESSIONAL ENGINEER
Mufeed Khalaf
No. 54260
Exp. 12-31-17
CIVIL
STATE OF CALIFORNIA

The State of California or its officers or agents shall not be responsible for the accuracy or completeness of scanned copies of this plan sheet.

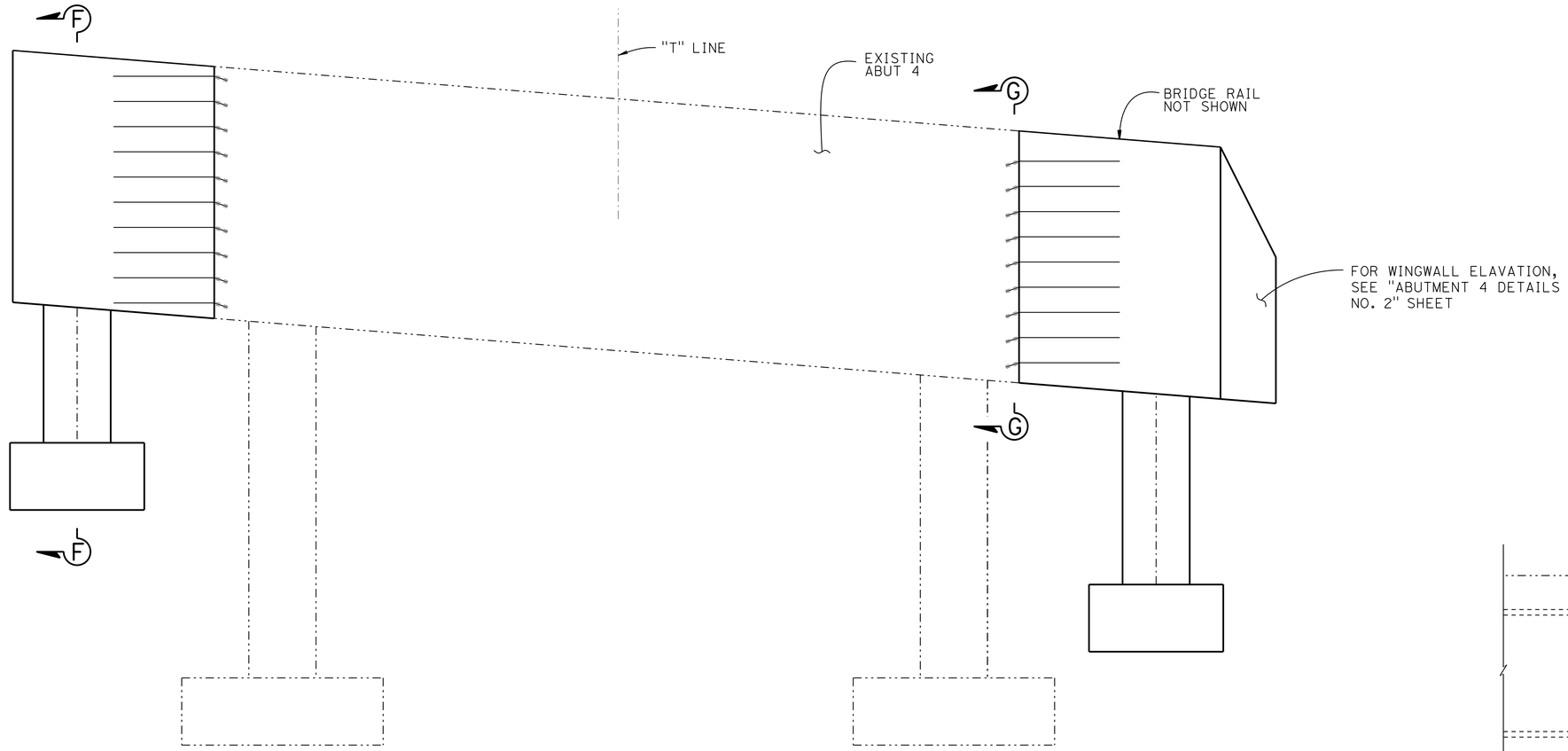

ELEVATION

1/2" = 1'-0"

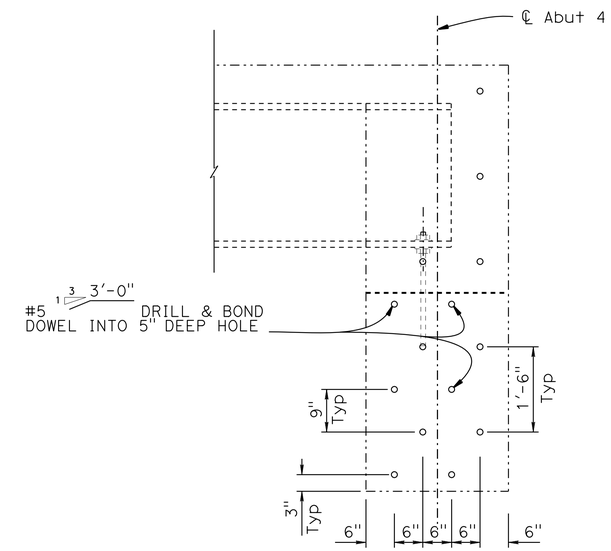

SECTION G-G

3/4" = 1'-0"

NOTE:
For "SECTION F-F", see "ABUTMENT 4 DETAILS NO. 2"

NOTE:
THE CONTRACTOR MUST VERIFY ALL CONTROLLING FIELD DIMENSIONS BEFORE ORDERING OR FABRICATING ANY MATERIAL.

	BY	CHECKED
DESIGN	Art V Herrera	Mufeed Khalaf
DETAILS	Shadi Motalebi	Mufeed Khalaf
QUANTITIES	Ashraf Ahmed	Raman Guraya

STATE OF CALIFORNIA
DEPARTMENT OF TRANSPORTATION

DIVISION OF ENGINEERING SERVICES
STRUCTURE DESIGN
DESIGN BRANCH 3

BRIDGE NO. 02-0068
POST MILE 52.48

THOMPSON CREEK BRIDGE (WIDEN)
ABUTMENT 4 DETAILS NO. 1

STRUCTURES DESIGN DETAIL SHEET (ENGLISH) (REV. 09-01-10)

ORIGINAL SCALE IN INCHES FOR REDUCED PLANS 0 1 2 3

UNIT: 3578
PROJECT NUMBER & PHASE: 02120000121
CONTRACT NO.: 02-4E6504

DISREGARD PRINTS BEARING EARLIER REVISION DATES

REVISION DATES 4-24-14 5-22-15

SHEET 9 OF 32

FILE => 02-0068-f-a04det01.dgn

USERNAME => s115152 DATE PLOTTED => 23-AUG-2016 TIME PLOTTED => 06:19

DIST	COUNTY	ROUTE	POST MILES TOTAL PROJECT	SHEET No.	TOTAL SHEETS
02	Sis	96	R52.5/88.4	120	208

Mufeed Khalaf 5-27-16
REGISTERED CIVIL ENGINEER DATE

06-15-16
PLANS APPROVAL DATE

REGISTERED PROFESSIONAL ENGINEER Mufeed Khalaf No. 54260 Exp. 12-31-17 CIVIL STATE OF CALIFORNIA

The State of California or its officers or agents shall not be responsible for the accuracy or completeness of scanned copies of this plan sheet.

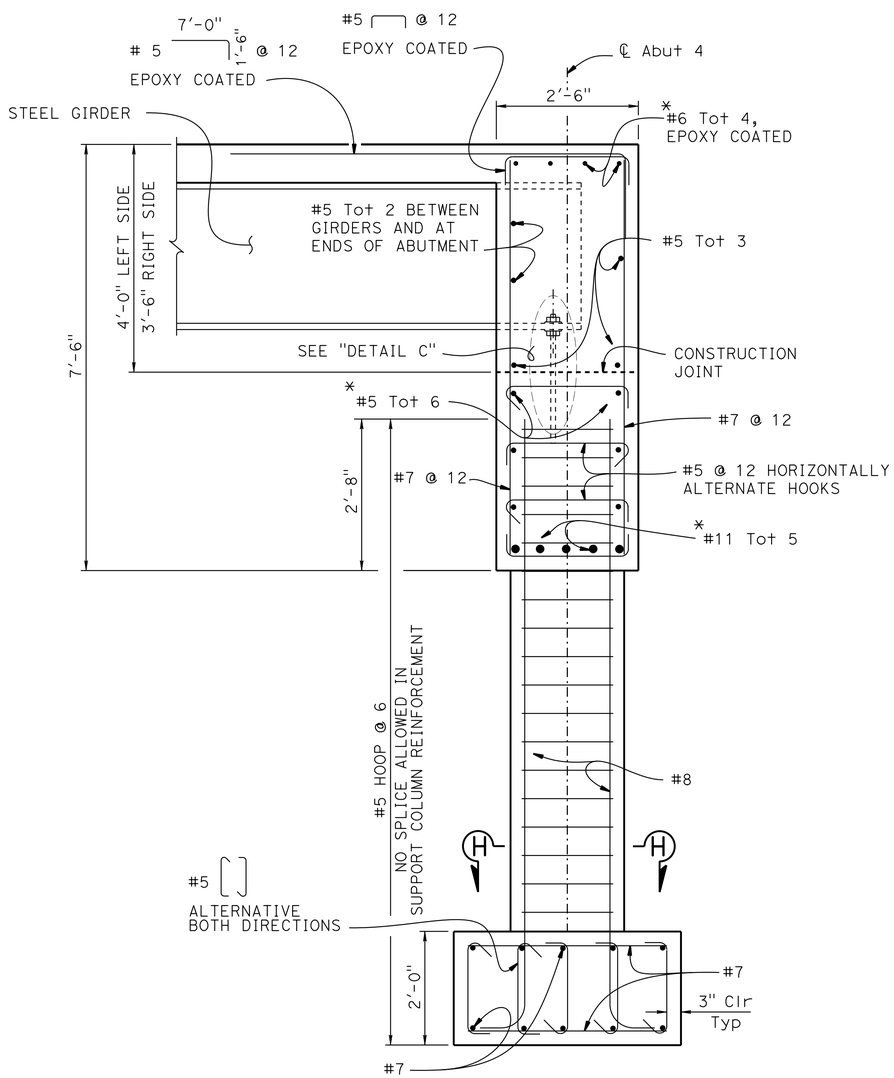

SECTION F-F

3/4" = 1'-0"

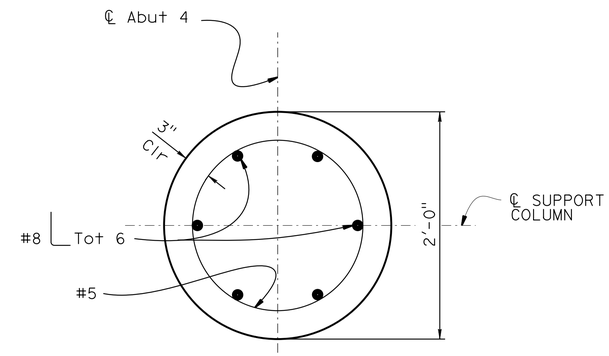

SECTION H-H

1 1/2" = 1'-0"

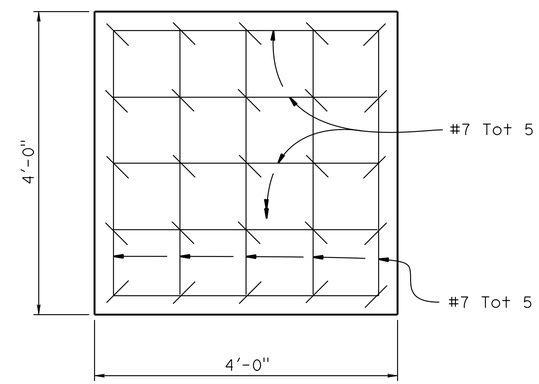

FOOTING PLAN

1" = 1'-0"

NOTES:

1. For "DETAIL C", see "ABUTMENT 4 DETAILS NO. 3" sheet
2. All hoops are ultimate butt splice continuous

LEGEND:

* Mechanical splice to existing reinforcement

NOTE:
THE CONTRACTOR MUST VERIFY ALL CONTROLLING FIELD DIMENSIONS BEFORE ORDERING OR FABRICATING ANY MATERIAL.

	BY	CHECKED
DESIGN	Art V Herrera	Mufeed Khalaf
DETAILS	Shadi Motalebi	Mufeed Khalaf
QUANTITIES	Ashraf Ahmed	Raman Guraya

STATE OF CALIFORNIA
DEPARTMENT OF TRANSPORTATION

DIVISION OF ENGINEERING SERVICES
STRUCTURE DESIGN
DESIGN BRANCH 3

BRIDGE NO. 02-0068
POST MILE 52.48

THOMPSON CREEK BRIDGE (WIDEN)
ABUTMENT 4 DETAILS NO. 2

STRUCTURES DESIGN DETAIL SHEET (ENGLISH) (REV. 09-01-10)

ORIGINAL SCALE IN INCHES FOR REDUCED PLANS 0 1 2 3

UNIT: 3578
PROJECT NUMBER & PHASE: 02120000121
CONTRACT NO.: 02-4E6504

DISREGARD PRINTS BEARING EARLIER REVISION DATES

REVISION DATES 6-18-15 1-26-16

SHEET 10 OF 32

FILE => 02-0068-f-a04det02.dgn

USERNAME => s115152 DATE PLOTTED => 23-AUG-2016 TIME PLOTTED => 06:19

DIST	COUNTY	ROUTE	POST MILES TOTAL PROJECT	SHEET No.	TOTAL SHEETS
02	Sis	96	R52.5/88.4	121	208

Mufeed Khalaf 5-27-16
REGISTERED CIVIL ENGINEER DATE

06-15-16
PLANS APPROVAL DATE

REGISTERED PROFESSIONAL ENGINEER
Mufeed Khalaf
No. 54260
Exp. 12-31-17
CIVIL
STATE OF CALIFORNIA

The State of California or its officers or agents shall not be responsible for the accuracy or completeness of scanned copies of this plan sheet.

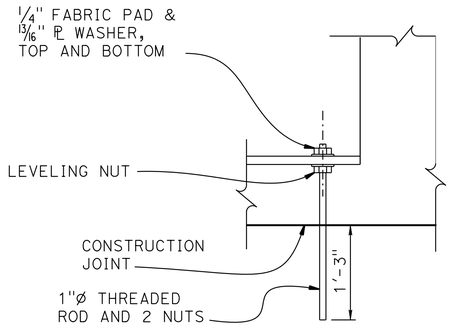

ELEVATION

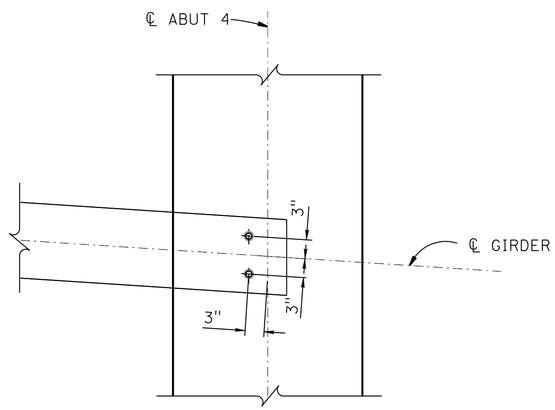

PLAN

DETAIL C
1" = 1'-0"

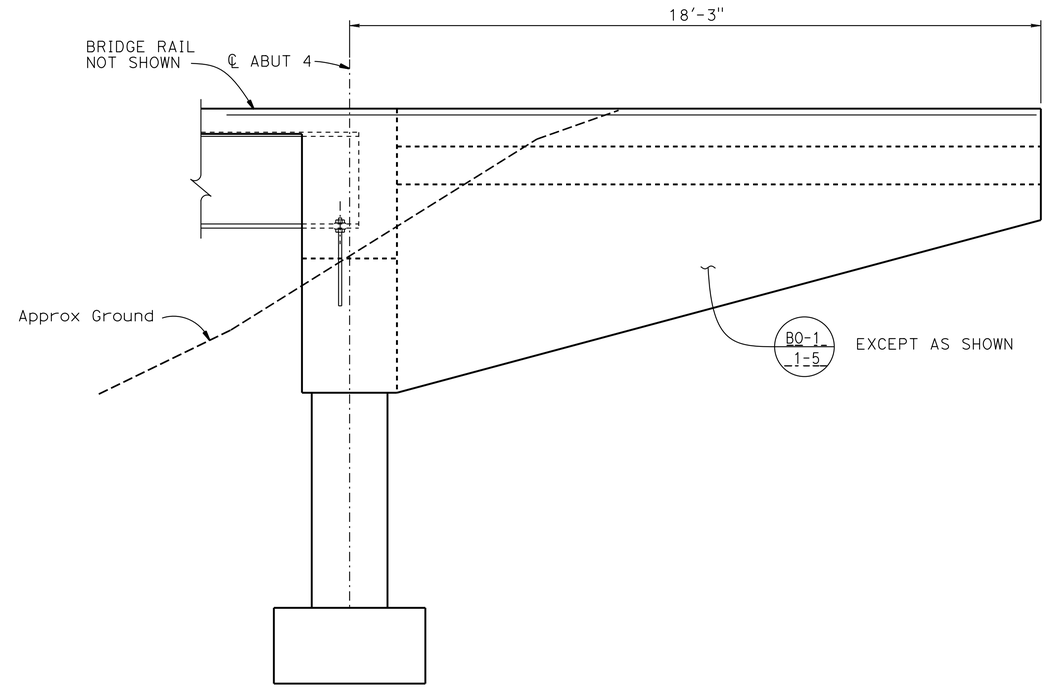

WINGWALL ELEVATION
1/2" = 1'-0"

NOTE:
THE CONTRACTOR MUST VERIFY ALL CONTROLLING FIELD DIMENSIONS BEFORE ORDERING OR FABRICATING ANY MATERIAL.

	BY	CHECKED
DESIGN	Art V Herrera	Mufeed Khalaf
DETAILS	Shadi Motalebi	Mufeed Khalaf
QUANTITIES	Ashraf Ahmed	Raman Guraya

STATE OF CALIFORNIA
DEPARTMENT OF TRANSPORTATION

DIVISION OF ENGINEERING SERVICES
STRUCTURE DESIGN
DESIGN BRANCH 3

BRIDGE NO. 02-0068
POST MILE 52.48

THOMPSON CREEK BRIDGE (WIDEN)
ABUTMENT 4 DETAILS NO. 3

STRUCTURES DESIGN DETAIL SHEET (ENGLISH) (REV. 09-01-10)

ORIGINAL SCALE IN INCHES FOR REDUCED PLANS 0 1 2 3

UNIT: 3578
PROJECT NUMBER & PHASE: 02120000121
CONTRACT NO.: 02-4E6504

DISREGARD PRINTS BEARING EARLIER REVISION DATES

REVISION DATES 6-16-15 10-15-15 2-2-16

SHEET 11 OF 32

FILE => 02-0068-f-a04det03.dgn

USERNAME => s113152 DATE PLOTTED => 23-AUG-2016 TIME PLOTTED => 06:19

DIST	COUNTY	ROUTE	POST MILES TOTAL PROJECT	SHEET No.	TOTAL SHEETS
02	Sis	96	R52.5/88.4	122	208

Mufeed Khalaf 5-27-16
REGISTERED CIVIL ENGINEER DATE

06-15-16
PLANS APPROVAL DATE

REGISTERED PROFESSIONAL ENGINEER Mufeed Khalaf No. 54260 Exp. 12-31-17 CIVIL STATE OF CALIFORNIA

The State of California or its officers or agents shall not be responsible for the accuracy or completeness of scanned copies of this plan sheet.

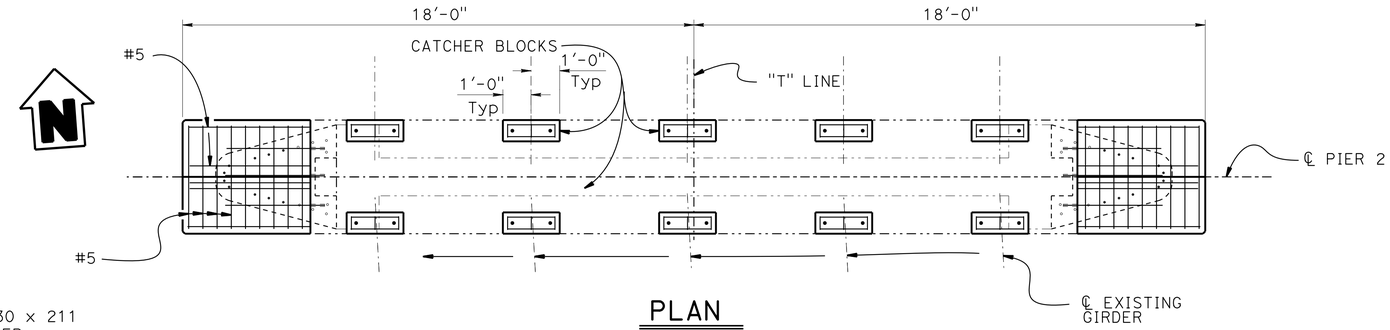

PLAN
3/8" = 1'-0"

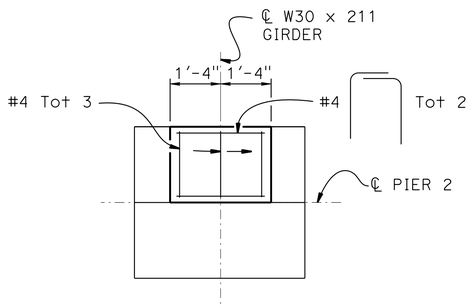

PIER 2

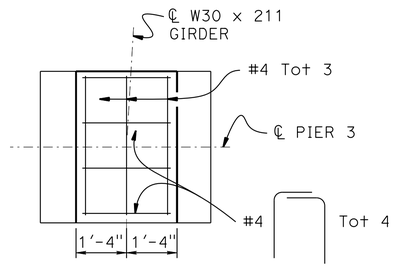

PIER 3

SECTION F-F
1/2" = 1'-0"

NOTE:

1. For "SECTION A-A", "SECTION D-D" and SECTION E-E", see "PIER DETAILS NO. 3" sheet
2. For "SECTION B-B", see "PIER DETAILS NO. 2" sheet

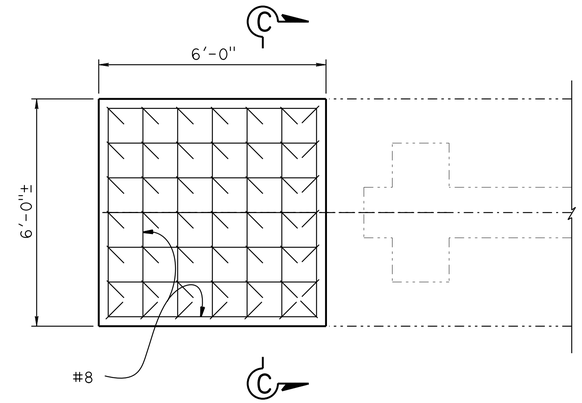

FOOTING PLAN
1/2" =1'-0"

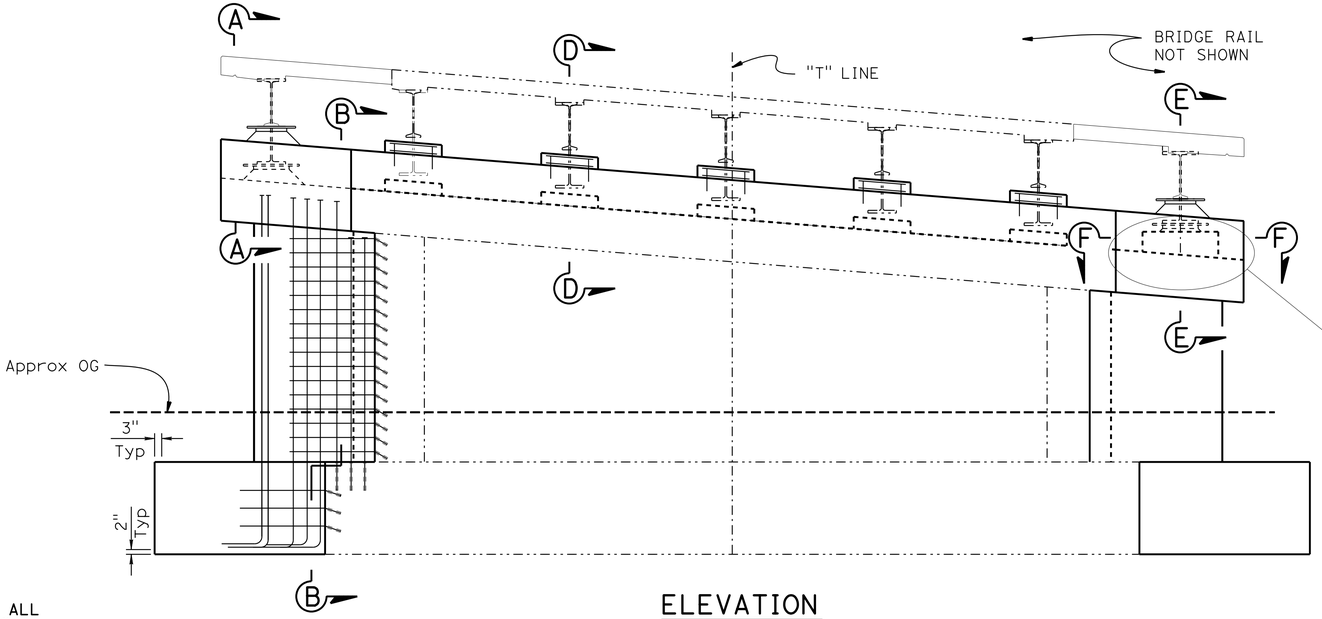

ELEVATION
3/8" = 1'-0"

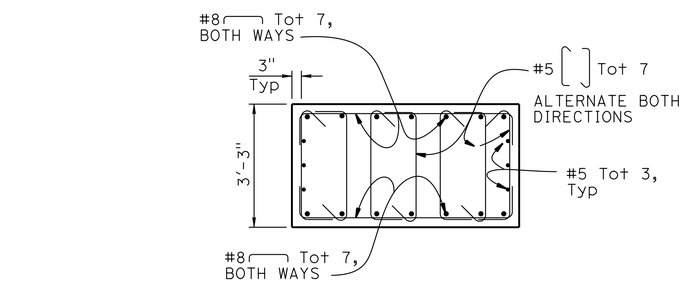

SECTION C-C
1/2" = 1'-0"

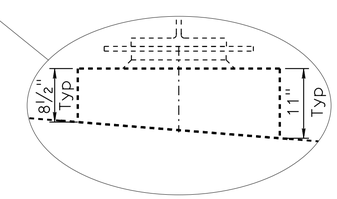

NOTE:
THE CONTRACTOR MUST VERIFY ALL CONTROLLING FIELD DIMENSIONS BEFORE ORDERING OR FABRICATING ANY MATERIAL.

	BY	CHECKED
DESIGN	Art V Herrera	Mufeed Khalaf
DETAILS	Shadi Motalebi	Mufeed Khalaf
QUANTITIES	Ashraf Ahmed	Raman Guraya

STATE OF CALIFORNIA
DEPARTMENT OF TRANSPORTATION

DIVISION OF ENGINEERING SERVICES
STRUCTURE DESIGN
DESIGN BRANCH 3

BRIDGE NO. 02-0068
POST MILE 52.48

THOMPSON CREEK BRIDGE (WIDEN)
PIER DETAILS NO. 1

STRUCTURES DESIGN DETAIL SHEET (ENGLISH) (REV. 09-01-10)

ORIGINAL SCALE IN INCHES FOR REDUCED PLANS 0 1 2 3

UNIT: 3578
PROJECT NUMBER & PHASE: 02120000121
CONTRACT NO.: 02-4E6504

DISREGARD PRINTS BEARING EARLIER REVISION DATES

REVISION DATES 10-29-15 11-13-15 12-29-15

SHEET 12 OF 32

FILE => 02-0068-n-pier01.dgn

USERNAME => s115152 DATE PLOTTED => 23-AUG-2016 TIME PLOTTED => 06:19

DIST	COUNTY	ROUTE	POST MILES TOTAL PROJECT	SHEET No.	TOTAL SHEETS
02	Sis	96	R52.5/88.4	123	208

Mufeed Khalaf 5-27-16
REGISTERED CIVIL ENGINEER DATE

06-15-16
PLANS APPROVAL DATE

REGISTERED PROFESSIONAL ENGINEER Mufeed Khalaf No. 54260 Exp. 12-31-17 CIVIL STATE OF CALIFORNIA

The State of California or its officers or agents shall not be responsible for the accuracy or completeness of scanned copies of this plan sheet.

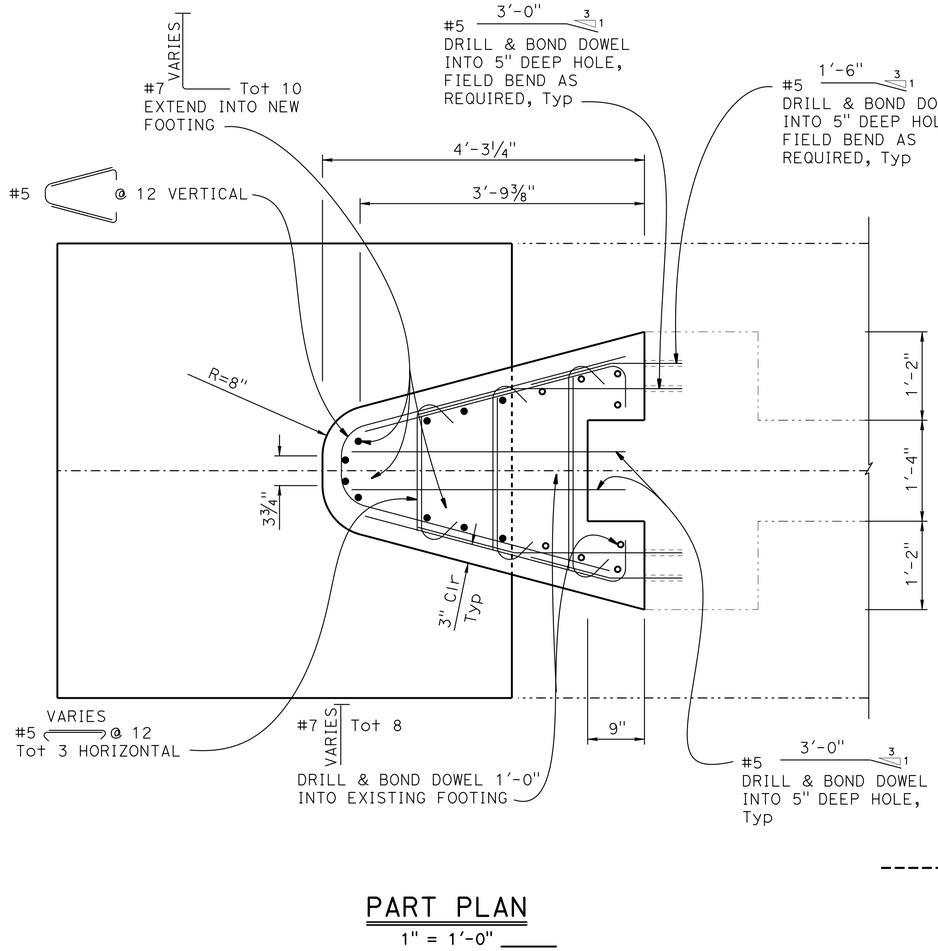

PART PLAN

1" = 1'-0"

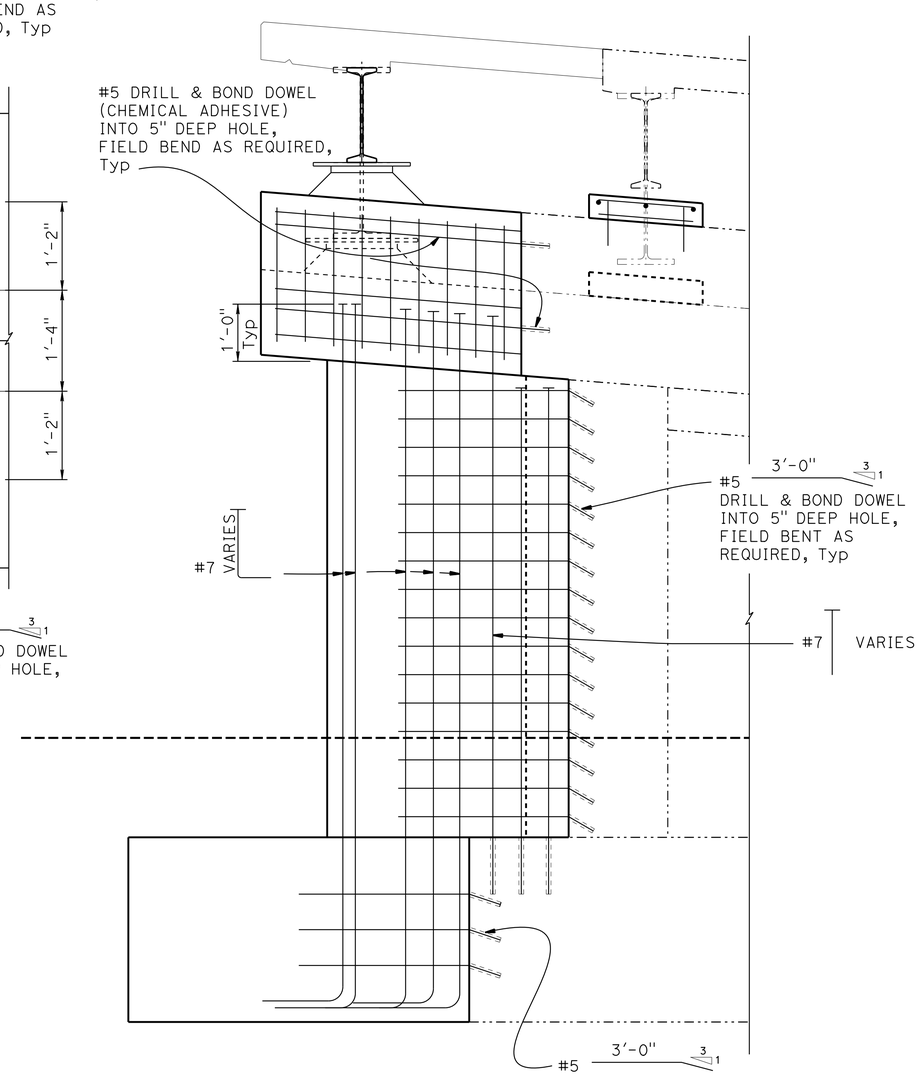

PART ELEVATION

3/4" = 1'-0"

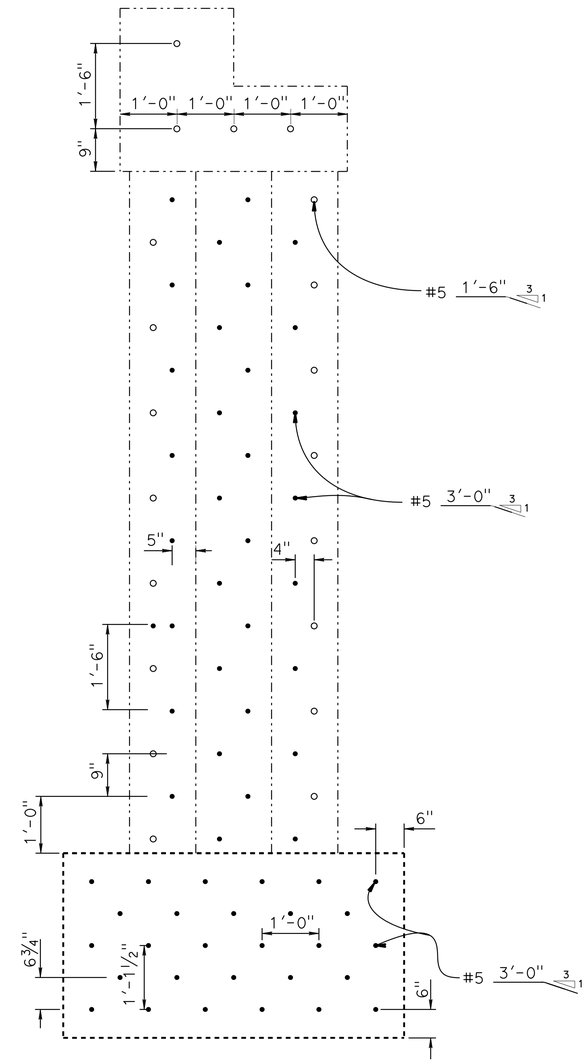

SECTION B-B

3/4" = 1'-0"

LEGEND:

⊥ or ⊤ Indicate T Head reinforcement

NOTE:

Pier 2 left Shown, pier 2 right and Pier 3 left/right similar

NOTE:
THE CONTRACTOR MUST VERIFY ALL CONTROLLING FIELD DIMENSIONS BEFORE ORDERING OR FABRICATING ANY MATERIAL.

	BY	CHECKED
DESIGN	Art V Herrera	Mufeed Khalaf
DETAILS	Shadi Motalebi	Mufeed Khalaf
QUANTITIES	Ashraf Ahmed	Raman Guraya

STATE OF CALIFORNIA
DEPARTMENT OF TRANSPORTATION

DIVISION OF ENGINEERING SERVICES
STRUCTURE DESIGN
DESIGN BRANCH 3

BRIDGE NO. 02-0068
POST MILE 52.48

THOMPSON CREEK BRIDGE (WIDEN)
PIER DETAILS NO. 2

STRUCTURES DESIGN DETAIL SHEET (ENGLISH) (REV. 09-01-10)

ORIGINAL SCALE IN INCHES FOR REDUCED PLANS 0 1 2 3

UNIT: 3578
PROJECT NUMBER & PHASE: 02120000121
CONTRACT NO.: 02-4E6504

DISREGARD PRINTS BEARING EARLIER REVISION DATES

REVISION DATES 2-12-15 10-28-15 1-12-16

SHEET 13 OF 32

FILE => 02-0068-h-pier02.dgn

USERNAME => s115152 DATE PLOTTED => 23-AUG-2016 TIME PLOTTED => 06:19

DIST	COUNTY	ROUTE	POST MILES TOTAL PROJECT	SHEET No.	TOTAL SHEETS
02	Sis	96	R52.5/88.4	124	208

Mufeed Khalaf 5-27-16
REGISTERED CIVIL ENGINEER DATE

06-15-16
PLANS APPROVAL DATE

REGISTERED PROFESSIONAL ENGINEER
Mufeed Khalaf
No. 54260
Exp. 12-31-17
CIVIL
STATE OF CALIFORNIA

The State of California or its officers or agents shall not be responsible for the accuracy or completeness of scanned copies of this plan sheet.

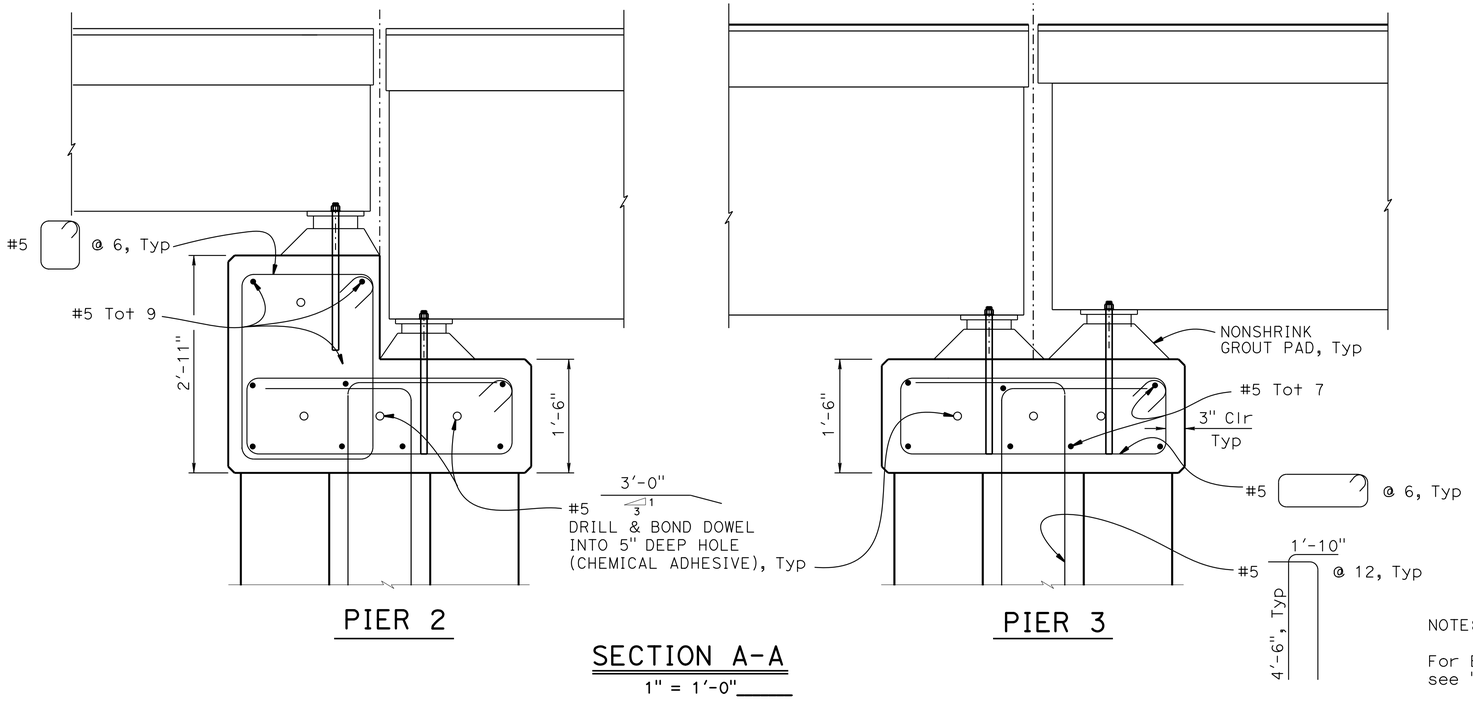

SECTION A-A
1" = 1'-0"

NOTE:

For Bearing pad details and locations, see "PIER DETAILS NO. 4" sheet

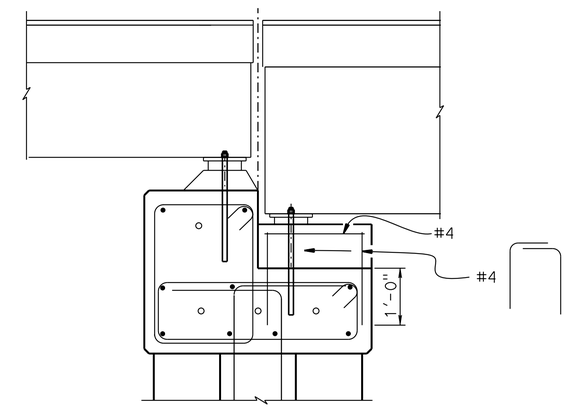

PIER 2

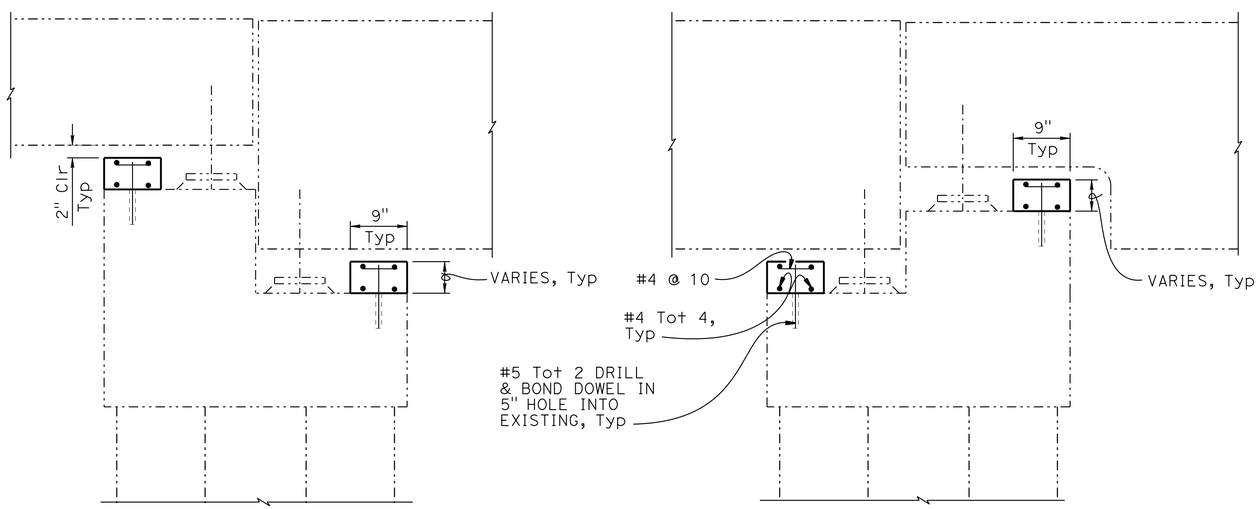

SECTION D-D
1" = 1'-0"

NOTE:

Catcher block height varies. Maintain 2" Clr from top of catcher block and bottom of girder

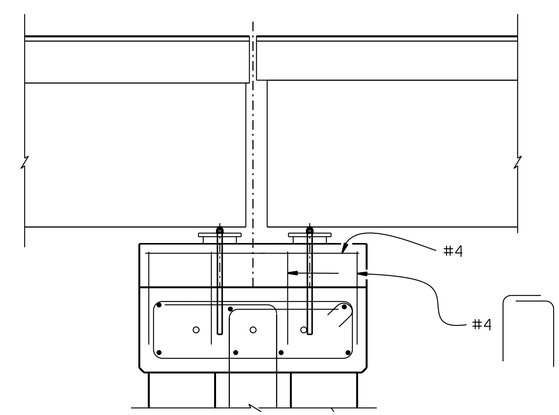

PIER 3

NOTE:

For details not shown, see "SECTION A-A"

SECTION E-E
3/4" = 1'-0"

NOTE:
THE CONTRACTOR MUST VERIFY ALL CONTROLLING FIELD DIMENSIONS BEFORE ORDERING OR FABRICATING ANY MATERIAL.

	BY	CHECKED
DESIGN	Art V Herrera	Mufeed Khalaf
DETAILS	Shadi Motalebi	Mufeed Khalaf
QUANTITIES	Ashraf Ahmed	Raman Guraya

STATE OF CALIFORNIA
DEPARTMENT OF TRANSPORTATION

DIVISION OF ENGINEERING SERVICES
STRUCTURE DESIGN
DESIGN BRANCH 3

BRIDGE NO. 02-0068
POST MILE 52.48

THOMPSON CREEK BRIDGE (WIDEN)
PIER DETAILLS NO. 3

STRUCTURES DESIGN DETAIL SHEET (ENGLISH) (REV. 09-01-10)

ORIGINAL SCALE IN INCHES FOR REDUCED PLANS 0 1 2 3

UNIT: 3578
PROJECT NUMBER & PHASE: 02120000121
CONTRACT NO.: 02-4E6504

DISREGARD PRINTS BEARING EARLIER REVISION DATES

REVISION DATES: 2-12-15 2-2-16 1-12-16

SHEET 14 OF 32

FILE => 02-0068-h-pier03t.dgn

USERNAME => s115152 DATE PLOTTED => 23-AUG-2016 TIME PLOTTED => 06:19

DIST	COUNTY	ROUTE	POST MILES TOTAL PROJECT	SHEET No.	TOTAL SHEETS
02	Sis	96	R52.5/88.4	125	208

Mufeed Khalaf 5-27-16
REGISTERED CIVIL ENGINEER DATE

06-15-16
PLANS APPROVAL DATE

REGISTERED PROFESSIONAL ENGINEER Mufeed Khalaf No. 54260 Exp. 12-31-17 CIVIL STATE OF CALIFORNIA

The State of California or its officers or agents shall not be responsible for the accuracy or completeness of scanned copies of this plan sheet.

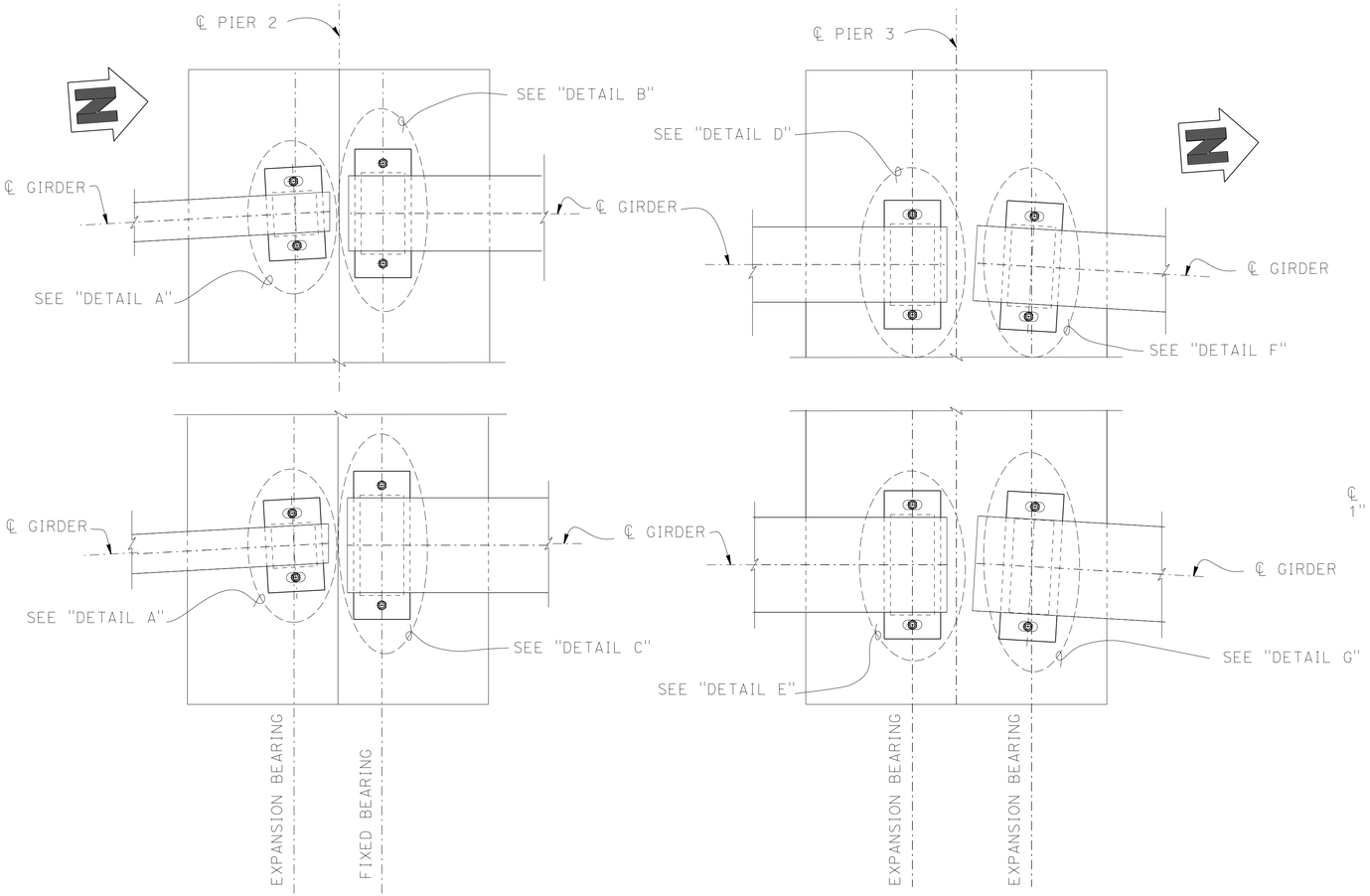

PART PLAN - PIER 2
1" = 1'-0"

PART PLAN - PIER 3
1" = 1'-0"

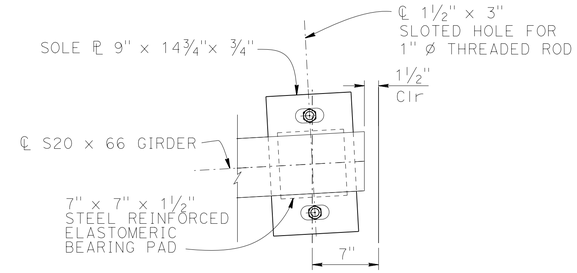

DETAIL A
1½" = 1'-0"

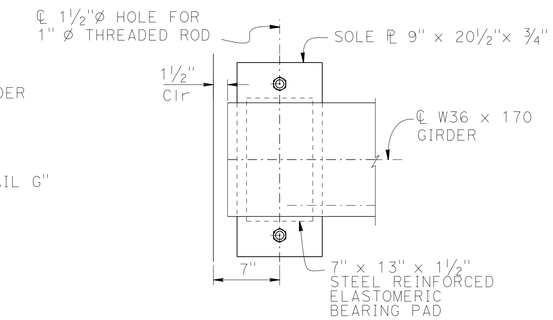

DETAIL B
1½" = 1'-0"

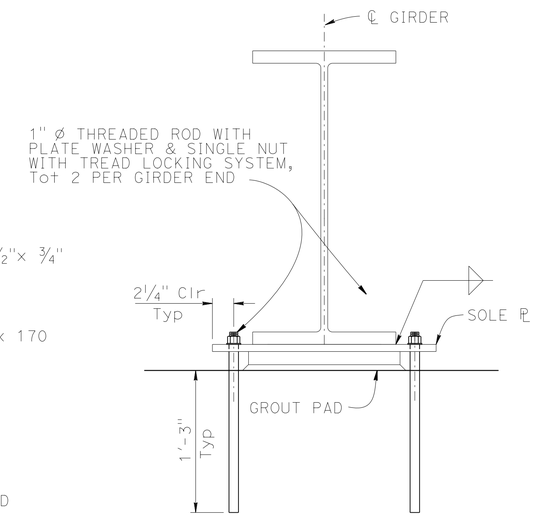

TYPICAL BEARING PAD DETAIL
1½" =1'-0"

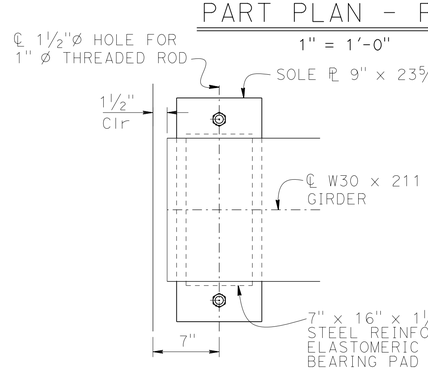

DETAIL C
1½" = 1'-0"

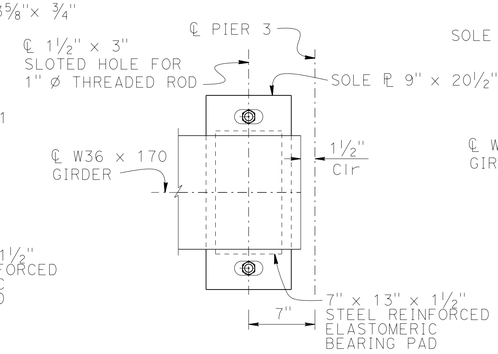

DETAIL D
1½" = 1'-0"

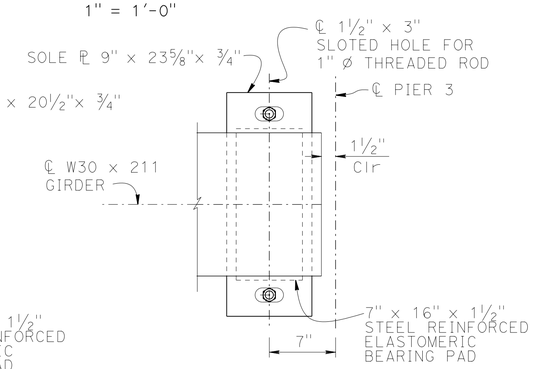

DETAIL E
1½" = 1'-0"

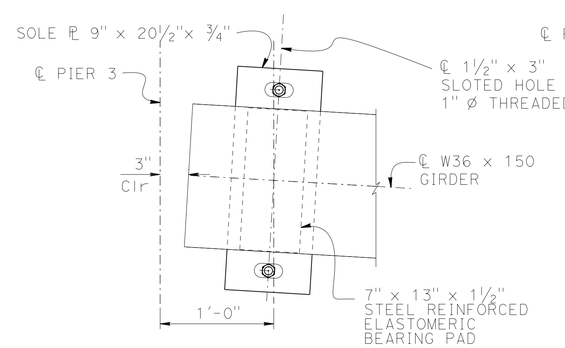

DETAIL F
1½" = 1'-0"

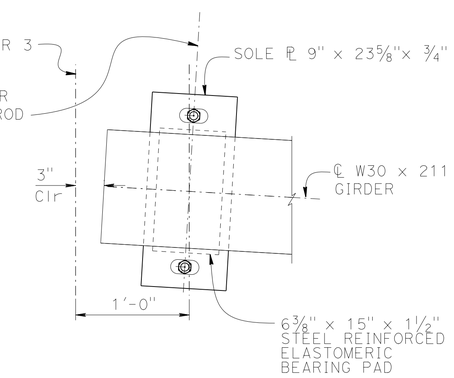

DETAIL G
1½" = 1'-0"

NOTE:
THE CONTRACTOR MUST VERIFY ALL CONTROLLING FIELD DIMENSIONS BEFORE ORDERING OR FABRICATING ANY MATERIAL.

	BY	CHECKED
DESIGN	Art V Herrera	Mufeed Khalaf
DETAILS	Shadi Motalebi	Mufeed Khalaf
QUANTITIES	Ashraf Ahmed	Raman Guraya

STATE OF CALIFORNIA
DEPARTMENT OF TRANSPORTATION

DIVISION OF ENGINEERING SERVICES
STRUCTURE DESIGN
DESIGN BRANCH 3

BRIDGE NO. 02-0068
POST MILE 52.48

THOMPSON CREEK BRIDGE (WIDEN)
PIER DETAILS NO. 4

STRUCTURES DESIGN DETAIL SHEET (ENGLISH) (REV. 09-01-10)

ORIGINAL SCALE IN INCHES FOR REDUCED PLANS 0 1 2 3

UNIT: 3578
PROJECT NUMBER & PHASE: 02120000121
CONTRACT NO.: 02-4E6504

DISREGARD PRINTS BEARING EARLIER REVISION DATES

REVISION DATES: 2-18-15 10-8-15 12-29-15 2-3-16

SHEET 15 OF 32

FILE => 02-0068-h-pier04.dgn

USERNAME => s115152 DATE PLOTTED => 23-AUG-2016 TIME PLOTTED => 06:19

DIST	COUNTY	ROUTE	POST MILES TOTAL PROJECT	SHEET No.	TOTAL SHEETS
02	Sis	96	R52.5/88.4	126	208

Mufeed Khalaf 5-27-16
REGISTERED CIVIL ENGINEER DATE

06-15-16
PLANS APPROVAL DATE

REGISTERED PROFESSIONAL ENGINEER Mufeed Khalaf No. 54260 Exp. 12-31-17 CIVIL STATE OF CALIFORNIA

The State of California or its officers or agents shall not be responsible for the accuracy or completeness of scanned copies of this plan sheet.

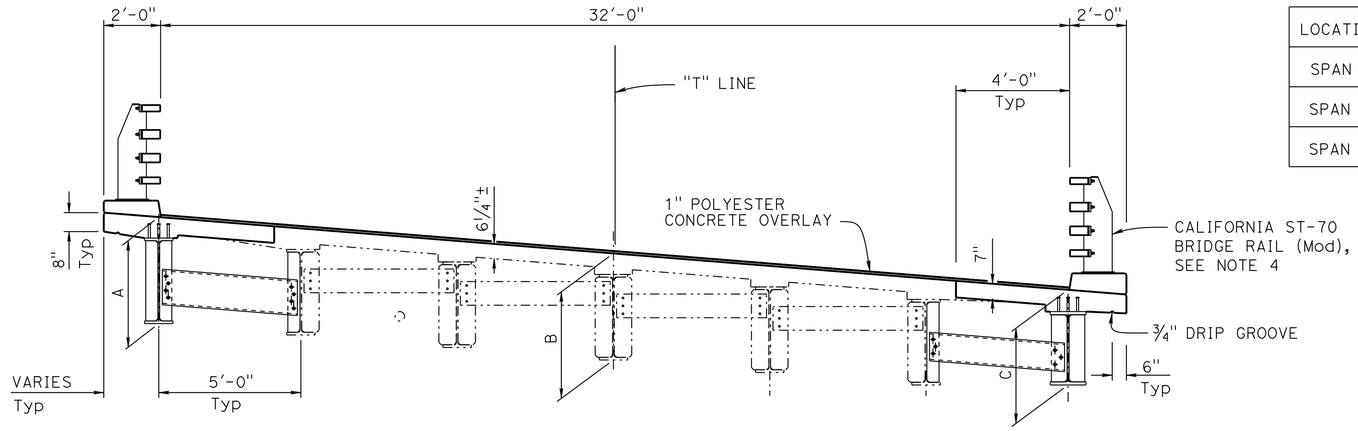

LOCATION	A	B	C
SPAN 1	2'-5"	2'-5"±	2'-5"
SPAN 2	3'-9"	3'-9"±	3'-3"
SPAN 3	3'-8"	3'-8"±	3'-3"

TYPICAL SECTION

⅜" = 1'-0"

NOTES:

1. All deck & barrier reinforcement to be Epoxy Coated
2. For Span 2 and Span 3 part typical section, see "TYPICAL SECTION NO. 2" sheet
3. For "DECK REPAIR DETAIL", see"JOINT SEAL DETAILS" sheet
4. For "BRIDGE RAIL DETAILS" not shown, see "CALIFORNIA ST-70 BRIDGE RAIL" sheets. For Stain Galvanized Surfaces, see "ROADWAY PLANS"

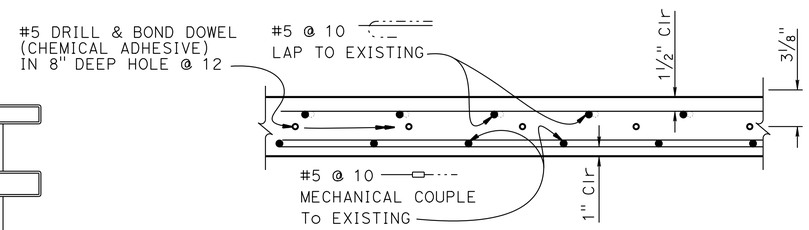

SECTION L-L

1½" = 1'-0"

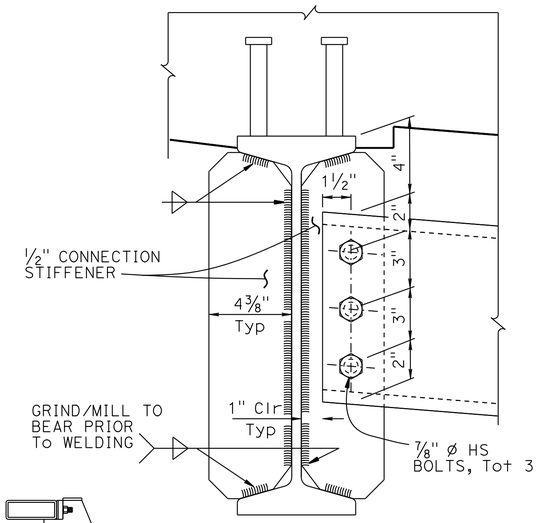

NOTE:

For details not shown, see "TYPICAL SECTION NO. 2" sheet

DETAIL C

3" =1'-0"

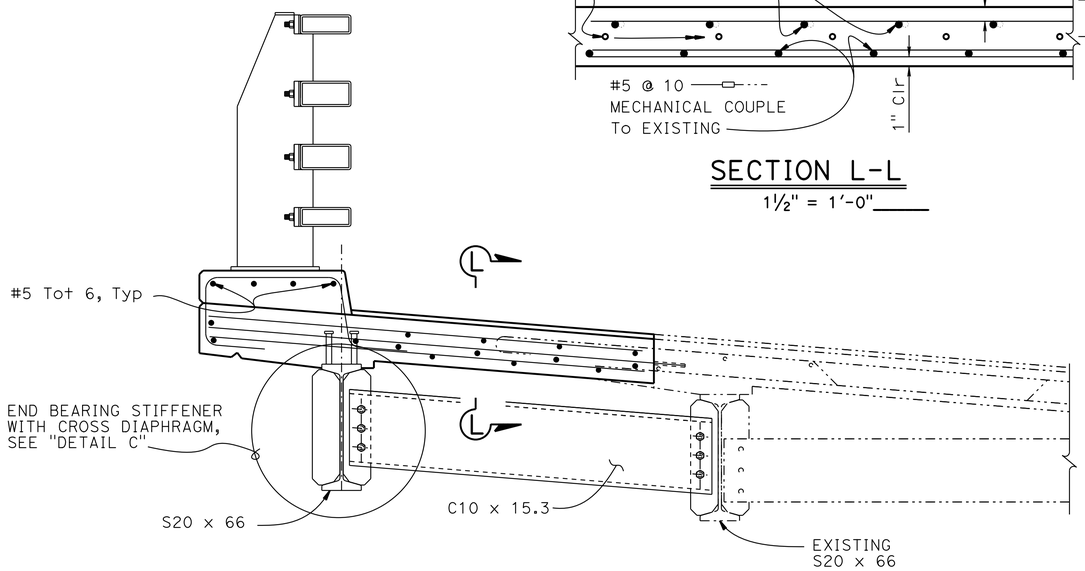

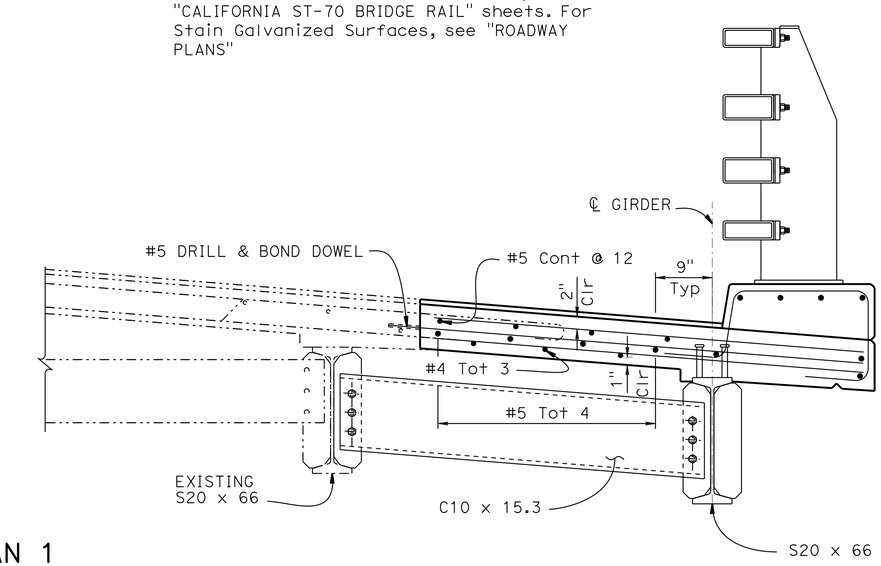

SPAN 1
PART TYPICAL SECTION

¾" = 1'-0"

NOTE:
THE CONTRACTOR MUST VERIFY ALL CONTROLLING FIELD DIMENSIONS BEFORE ORDERING OR FABRICATING ANY MATERIAL.

	BY	CHECKED
DESIGN	Art V Herrera	Mufeed Khalaf
DETAILS	Shadi Motalebi	Mufeed Khalaf
QUANTITIES	Ashraf Ahmed	Raman Guraya

STATE OF CALIFORNIA
DEPARTMENT OF TRANSPORTATION

DIVISION OF ENGINEERING SERVICES
STRUCTURE DESIGN
DESIGN BRANCH 3

BRIDGE NO. 02-0068
POST MILE 52.48

THOMPSON CREEK BRIDGE (WIDEN)
TYPICAL SECTION NO. 1

STRUCTURES DESIGN DETAIL SHEET (ENGLISH) (REV. 09-01-10)

ORIGINAL SCALE IN INCHES FOR REDUCED PLANS 0 1 2 3

UNIT: 3578
PROJECT NUMBER & PHASE: 02120000121
CONTRACT NO.: 02-4E6504

DISREGARD PRINTS BEARING EARLIER REVISION DATES

REVISION DATES 4-3-14 1-15-16 2-3-16

SHEET 16 OF 32

FILE => 02-0068-k-typ01.dgn

USERNAME => s113152 DATE PLOTTED => 23-AUG-2016 TIME PLOTTED => 06:19

DIST	COUNTY	ROUTE	POST MILES TOTAL PROJECT	SHEET No.	TOTAL SHEETS
02	Sis	96	R52.5/88.4	127	208

Mufeed Khalaf 5-27-16
REGISTERED CIVIL ENGINEER DATE

06-15-16
PLANS APPROVAL DATE

REGISTERED PROFESSIONAL ENGINEER Mufeed Khalaf No. 54260 Exp. 12-31-17 CIVIL STATE OF CALIFORNIA

The State of California or its officers or agents shall not be responsible for the accuracy or completeness of scanned copies of this plan sheet.

NOTES:

1. SPAN 2 SHOWN, SPAN 3 similar.
2. a) Clean structural steel (existing bridge)
   b) Spot blast clean & paint undercoat
   c) Paint structural steel (existing bridge)

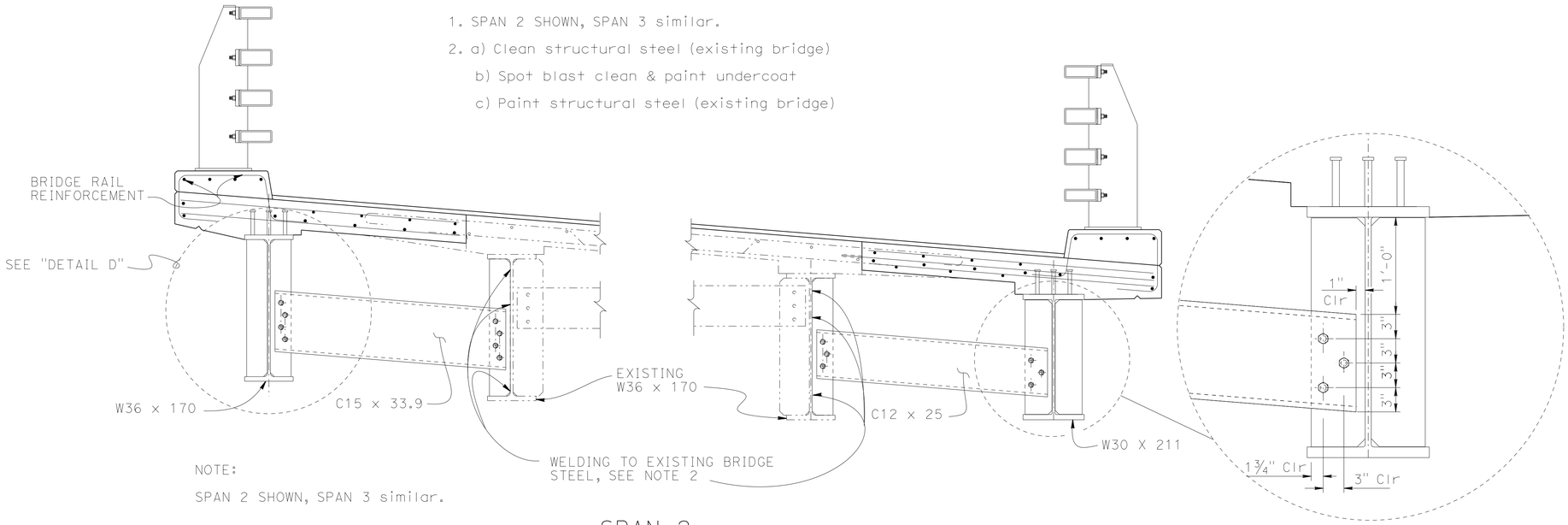

NOTE:
SPAN 2 SHOWN, SPAN 3 similar.

SPAN 2 PART TYPICAL SECTION

3/4" = 1'-0"

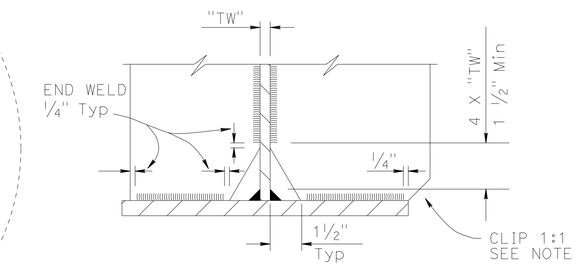

COPE AND WELDING DETAIL

NO SCALE

NOTE: Omit clip at bottom flange when less than 2"

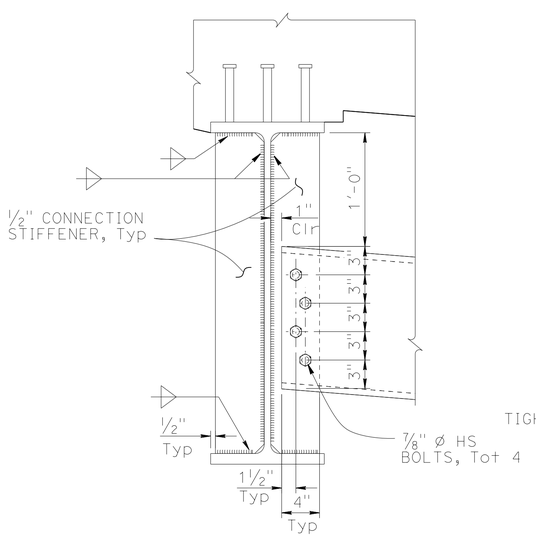

END BEARING STIFFENERS

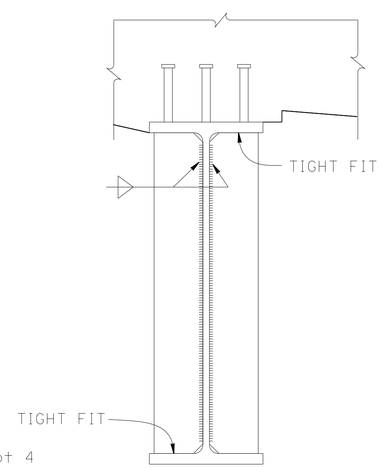

TRANSVERSE WEB STIFFENER

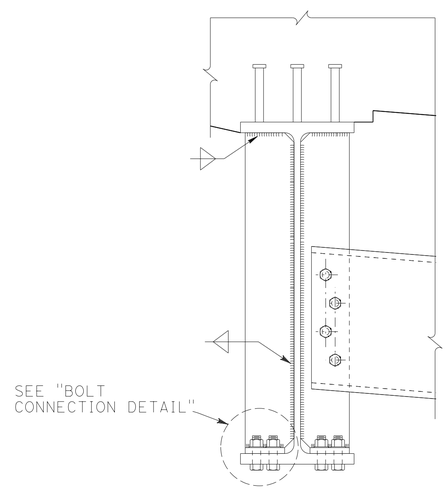

INTERMEDIATE STIFFENER

DETAIL D

3" = 1'-0"

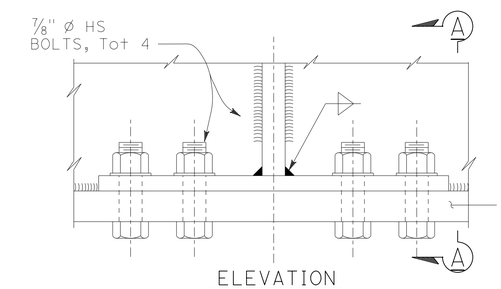

ELEVATION

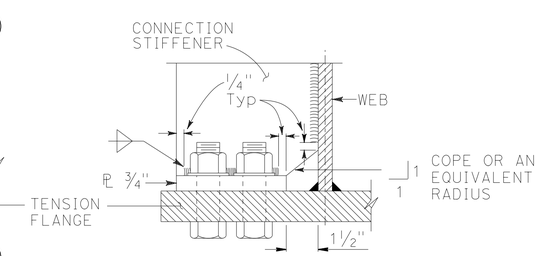

SECTION A-A

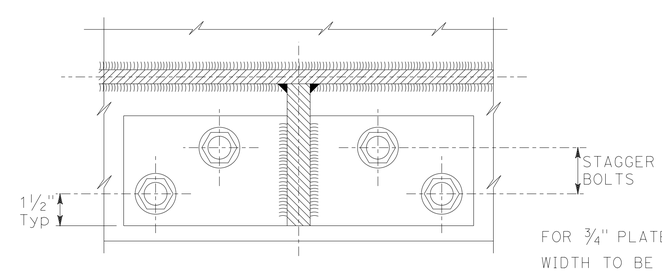

PLAN VIEW

FOR 3/4" PLATE:
WIDTH TO BE AS DRAWN.
LENGTH TO BE MINIMUM TO PROVIDE FOR INSTALLATION CLEARANCE AND 2 5/8" C-C BETWEEN ADJACENT BOLTS.

BOLT CONNECTION DETAIL

NO SCALE

NOTE:
THE CONTRACTOR MUST VERIFY ALL CONTROLLING FIELD DIMENSIONS BEFORE ORDERING OR FABRICATING ANY MATERIAL.

	BY	CHECKED
DESIGN	Art V Herrera	Mufeed Khalaf
DETAILS	Shadi Motalebi	Mufeed Khalaf
QUANTITIES	Ashraf Ahmed	Raman Guraya

STATE OF CALIFORNIA
DEPARTMENT OF TRANSPORTATION

DIVISION OF ENGINEERING SERVICES
STRUCTURE DESIGN
DESIGN BRANCH 3

BRIDGE NO. 02-0068
POST MILE 52.48

THOMPSON CREEK BRIDGE (WIDEN)
TYPICAL SECTION NO. 2

STRUCTURES DESIGN DETAIL SHEET (ENGLISH) (REV. 09-01-10)

ORIGINAL SCALE IN INCHES FOR REDUCED PLANS 0 1 2 3

UNIT: 3578
PROJECT NUMBER & PHASE: 02120000121
CONTRACT NO.: 02-4E6504

DISREGARD PRINTS BEARING EARLIER REVISION DATES

REVISION DATES: 2-12-16 11-22-15 1-12-16 2-3-16

SHEET 17 OF 32

FILE => 02-0068-k-typ02.dgn

USERNAME => s115152 DATE PLOTTED => 23-AUG-2016 TIME PLOTTED => 06:19

DIST	COUNTY	ROUTE	POST MILES TOTAL PROJECT	SHEET No.	TOTAL SHEETS
02	Sis	96	R52.5/88.4	128	208

Mufeed Khalaf 5-27-16
REGISTERED CIVIL ENGINEER DATE

06-15-16
PLANS APPROVAL DATE

REGISTERED PROFESSIONAL ENGINEER
Mufeed Khalaf
No. 54260
Exp. 12-31-17
CIVIL
STATE OF CALIFORNIA

The State of California or its officers or agents shall not be responsible for the accuracy or completeness of scanned copies of this plan sheet.

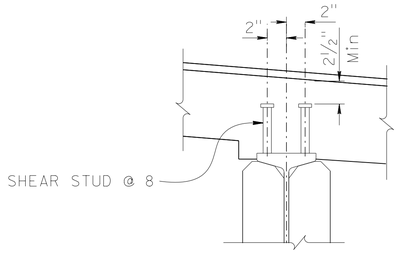

SPAN 1

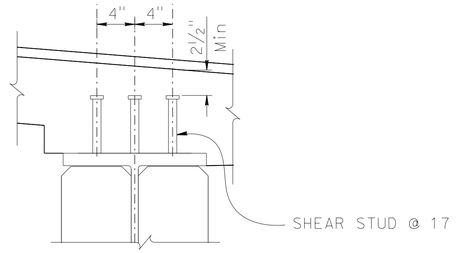

SPAN 2

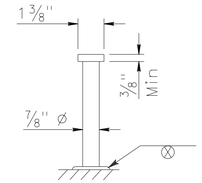

NOTES:

1. SPAN 2 SHOWN, SPAN 3 similar.
2. LENGTHS OF STUDS TO BE DETERMINED BY THE CONTRACTOR,MINIMUM LENGTH IS 6"

STUD CONNECTION

NO SCALE

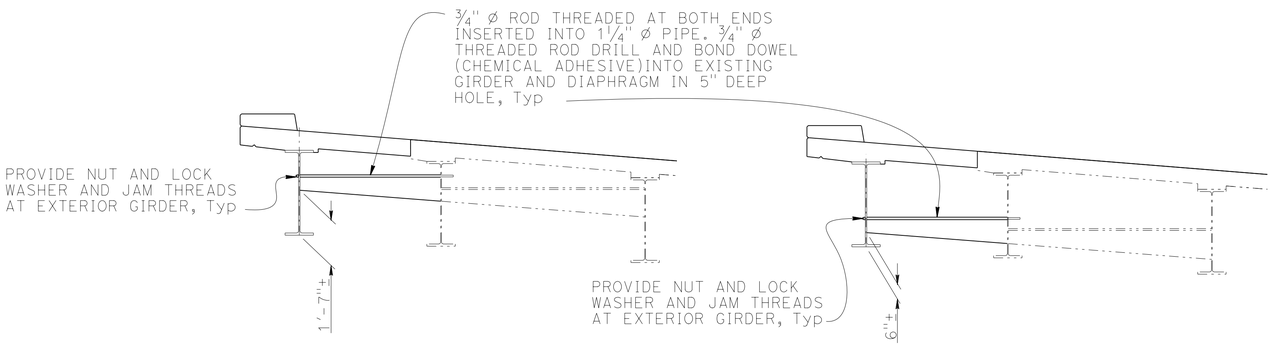

NOTE:

For more details, see "GIRDER DETAILS" sheet

DIAPHRAGM AT PIER 3

3/8" = 1'-0"

INTERMEDIATE DIAPHRAGM AT SPAN 3

3/8" = 1'-0"

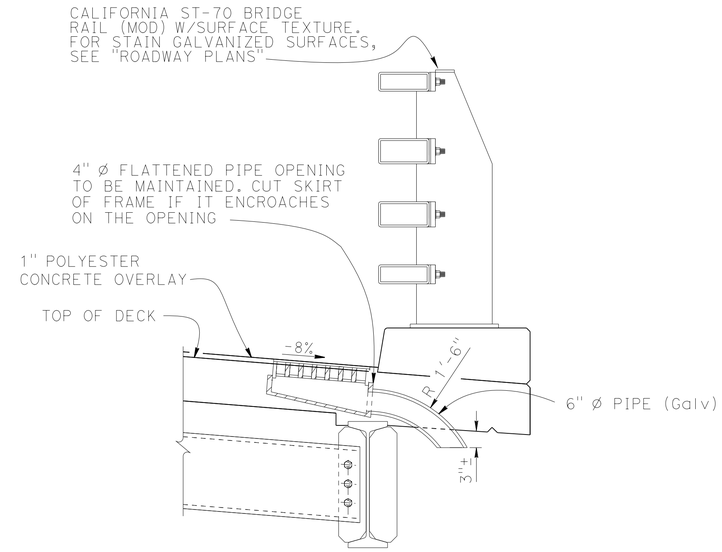

TYPE D-2 (MOD)

1" = 1'-0"

NOTES:

1. For Deck Drain Type D-2 (Mod) locations see "GIRDER LAYOUT" sheet
2. For Type D-2 (Mod) details not shown see B7-6 / 7-8
3. Omit shear stud at deck drain location

NOTE:
THE CONTRACTOR MUST VERIFY ALL CONTROLLING FIELD DIMENSIONS BEFORE ORDERING OR FABRICATING ANY MATERIAL.

DESIGN	BY Art V Herrera	CHECKED Mufeed Khalaf	
DETAILS	BY Shadi Motalebi	CHECKED Mufeed Khalaf	
QUANTITIES	BY Ashraf Ahmed	CHECKED Raman Guraya	

STATE OF CALIFORNIA
DEPARTMENT OF TRANSPORTATION

DIVISION OF ENGINEERING SERVICES
STRUCTURE DESIGN
DESIGN BRANCH 3

BRIDGE NO. 02-0068
POST MILE 52.48

THOMPSON CREEK BRIDGE (WIDEN)
MISCELLANEOUS DETAILS

STRUCTURES DESIGN DETAIL SHEET (ENGLISH) (REV. 09-01-10)

ORIGINAL SCALE IN INCHES FOR REDUCED PLANS 0 1 2 3

UNIT: 3578
PROJECT NUMBER & PHASE: 02120000121
CONTRACT NO.: 02-4E6504

DISREGARD PRINTS BEARING EARLIER REVISION DATES

REVISION DATES: 10-2-15 12-29-15 ....

SHEET 18 OF 32

FILE => 02-0068-1-miscdt.dgn

USERNAME => s115152 DATE PLOTTED => 23-AUG-2016 TIME PLOTTED => 06:19

DIST	COUNTY	ROUTE	POST MILES TOTAL PROJECT	SHEET No.	TOTAL SHEETS
02	Sis	96	R52.5/88.4	129	208

Mufeed Khalaf 5-27-16
REGISTERED CIVIL ENGINEER DATE

06-15-16
PLANS APPROVAL DATE

REGISTERED PROFESSIONAL ENGINEER
Mufeed Khalaf
No. 54260
Exp. 12-31-17
CIVIL
STATE OF CALIFORNIA

The State of California or its officers or agents shall not be responsible for the accuracy or completeness of scanned copies of this plan sheet.

GIRDER LOCATION	LENGTH
SPAN 1	23'-2 9/16"
SPAN 2	59'-8 5/8"
SPAN 3	39'-9 1/4"

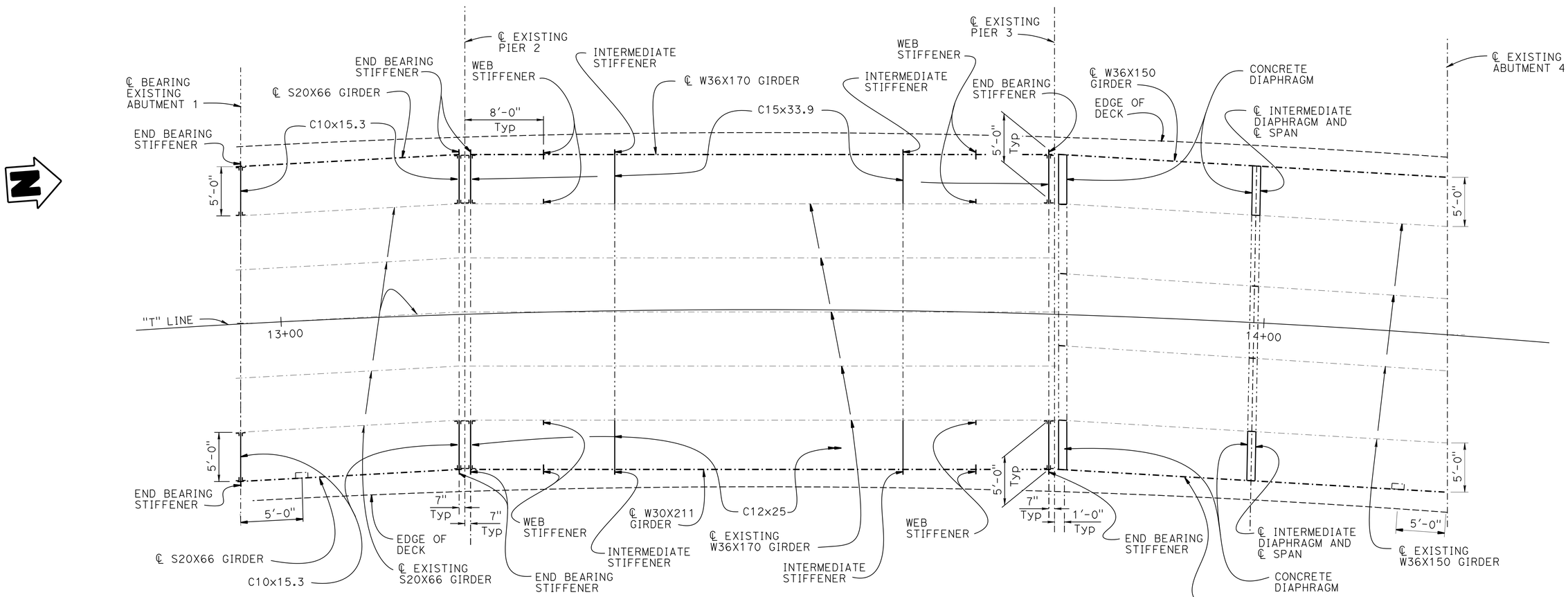

PLAN

3/16" = 1'-0"

LEGEND:

Indicates deck drain Type D-2 (Mod)

NOTE:
THE CONTRACTOR MUST VERIFY ALL CONTROLLING FIELD DIMENSIONS BEFORE ORDERING OR FABRICATING ANY MATERIAL.

	BY	CHECKED
DESIGN	Art V Herrera	Mufeed Khalaf
DETAILS	Shadi Motalebi	Mufeed Khalaf
QUANTITIES	Ashraf Ahmed	Raman Guraya

STATE OF CALIFORNIA
DEPARTMENT OF TRANSPORTATION

DIVISION OF ENGINEERING SERVICES
STRUCTURE DESIGN
DESIGN BRANCH 3

BRIDGE NO. 02-0068
POST MILE 52.48

THOMPSON CREEK BRIDGE (WIDEN)
GIRDER LAYOUT

STRUCTURES DESIGN DETAIL SHEET (ENGLISH) (REV. 09-01-10)

ORIGINAL SCALE IN INCHES FOR REDUCED PLANS 0 1 2 3

UNIT: 3578
PROJECT NUMBER & PHASE: 02120000121
CONTRACT NO.: 02-4E6504

DISREGARD PRINTS BEARING EARLIER REVISION DATES

REVISION DATES 4-15-14 1-12-16 12-23-16

SHEET 19 OF 32

FILE => 02-0068-m-glo.dgn

USERNAME => s115152 DATE PLOTTED => 23-AUG-2016 TIME PLOTTED => 06:19

DIST	COUNTY	ROUTE	POST MILES TOTAL PROJECT	SHEET No.	TOTAL SHEETS
02	Sis	96	R52.5/88.4	130	208

Mufeed Khalaf 5-27-16
REGISTERED CIVIL ENGINEER DATE

06-15-16
PLANS APPROVAL DATE

REGISTERED PROFESSIONAL ENGINEER Mufeed Khalaf No. 54260 Exp. 12-31-17 CIVIL STATE OF CALIFORNIA

The State of California or its officers or agents shall not be responsible for the accuracy or completeness of scanned copies of this plan sheet.

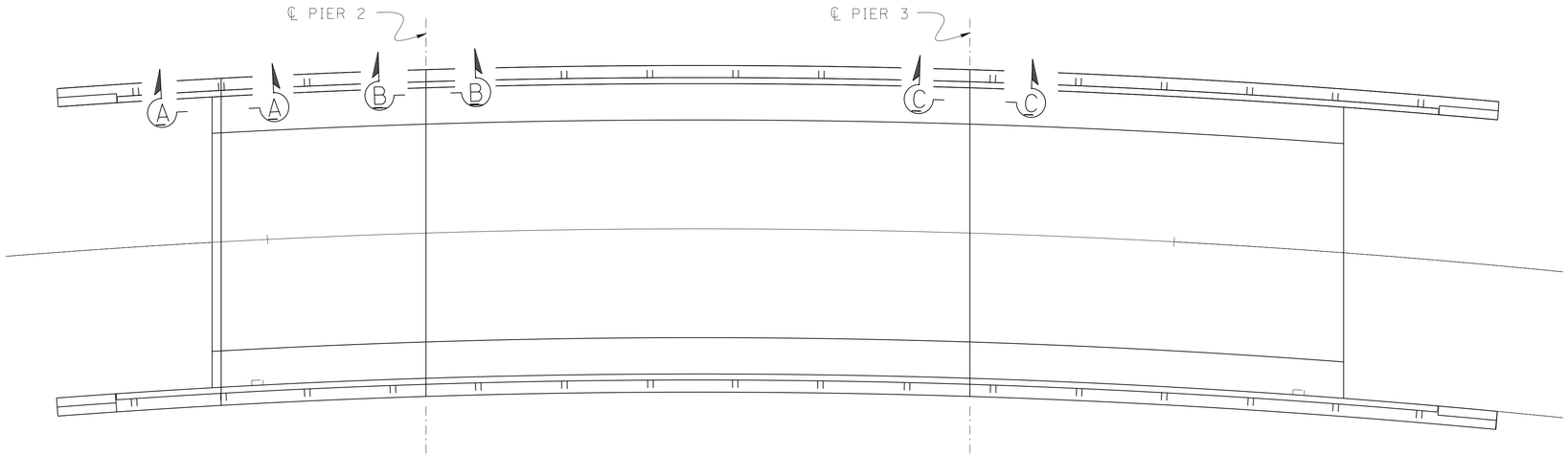

NOTE:
For details not shown, see "JOINT SEAL DETAILS" sheet

PLAN
1/8" = 1'-0"

LEGEND:
Indicates deck drain Type D-2 (Mod)
* Indicates Epoxy Coated Reinforcement

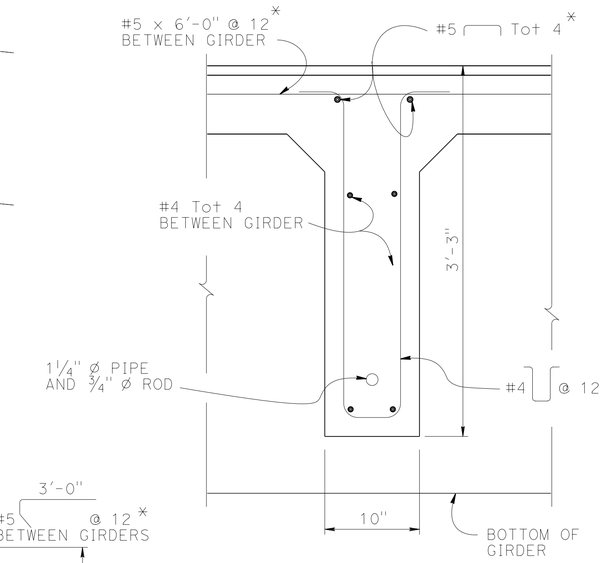

INTERMEDIATE DIAPHRAGM SECTION
1 1/2" = 1'-0"

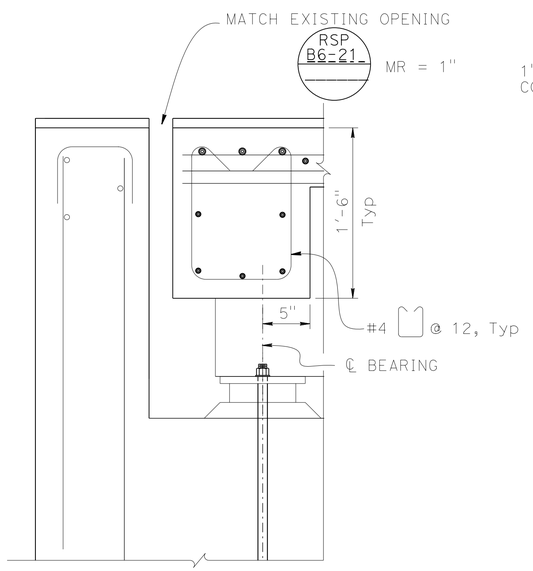

NOTES:
1. For details not shown, see "SECTION B-B"
2. Detail typical at Bent locations

SECTION A-A
1 1/2" = 1'-0"

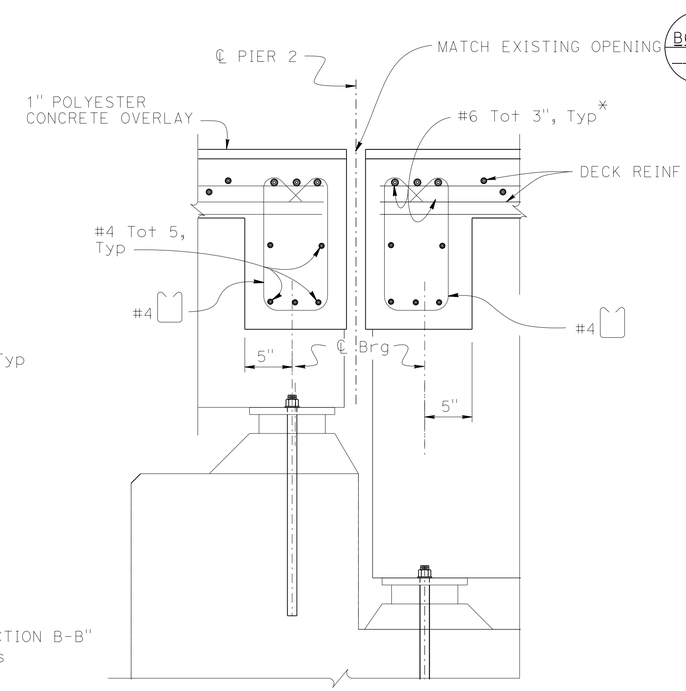

SECTION B-B
1 1/2" = 1'-0"

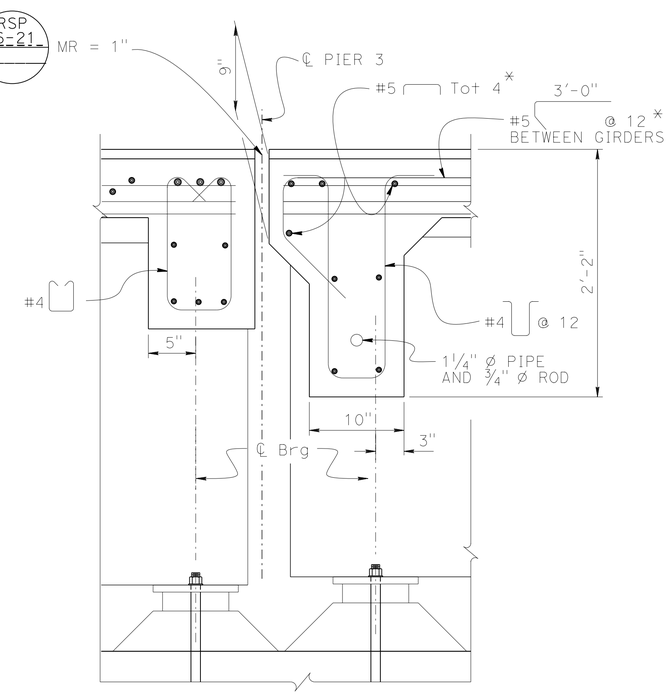

SECTION C-C
1 1/2" = 1'-0"

NOTE:
THE CONTRACTOR MUST VERIFY ALL CONTROLLING FIELD DIMENSIONS BEFORE ORDERING OR FABRICATING ANY MATERIAL.

DESIGN	BY Art V Herrera	CHECKED Mufeed Khalaf	
DETAILS	BY Shadi Motalebi	CHECKED Mufeed Khalaf	
QUANTITIES	BY Ashraf Ahmed	CHECKED Raman Guraya	

STATE OF CALIFORNIA
DEPARTMENT OF TRANSPORTATION

DIVISION OF ENGINEERING SERVICES
STRUCTURE DESIGN
DESIGN BRANCH 3

BRIDGE NO. 02-0068
POST MILE 52.48

THOMPSON CREEK BRIDGE (WIDEN)
GIRDER DETAILS

STRUCTURES DESIGN DETAIL SHEET (ENGLISH) (REV. 09-01-10)

ORIGINAL SCALE IN INCHES FOR REDUCED PLANS 0 1 2 3

UNIT: 3578
PROJECT NUMBER & PHASE: 02120000121
CONTRACT NO.: 02-4E6504

DISREGARD PRINTS BEARING EARLIER REVISION DATES

REVISION DATES: 6-8-15 | ..... | 1-12-16 | 12-29-15

SHEET 20 OF 32

FILE => 02-0068-n-gdt.dgn

USERNAME => s115152 DATE PLOTTED => 23-AUG-2016 TIME PLOTTED => 06:19

DIST	COUNTY	ROUTE	POST MILES TOTAL PROJECT	SHEET No.	TOTAL SHEETS
02	Sis	96	R52.5/88.4	131	208

Mufeed Khalaf 5-27-16
REGISTERED CIVIL ENGINEER DATE

06-15-16
PLANS APPROVAL DATE

REGISTERED PROFESSIONAL ENGINEER
Mufeed Khalaf
No. 54260
Exp. 12-31-17
CIVIL
STATE OF CALIFORNIA

The State of California or its officers or agents shall not be responsible for the accuracy or completeness of scanned copies of this plan sheet.

JOINT SEAL TABLE

LOCATION	REPLACE EXISTING JOINT	Exist WATERSTOP	Approx LENGTH EXISTING JOINT	Approx DEPTH CLEAN EXISTING JOINT	LENGTH OF NEW EXPANSION JOINT	TYPE
Abut 1	YES	NO	25'-0"±	10"	32'-6"	B
PIER 2	YES	NO	25'-0"±	7"	32'-6"	B
PIER 3	YES	NO	25'-0"±	7"	32'-6"	B
Abut 4	N/A	N/A	N/A	N/A	N/A	N/A

NOTE:

For details not shown, see RSP B6-21

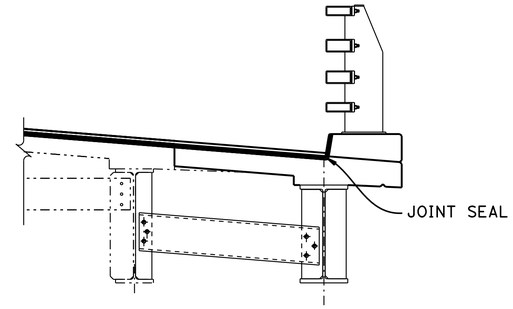

JOINT SEAL AT LOW SIDE OF DECK

½" = 1'-0"

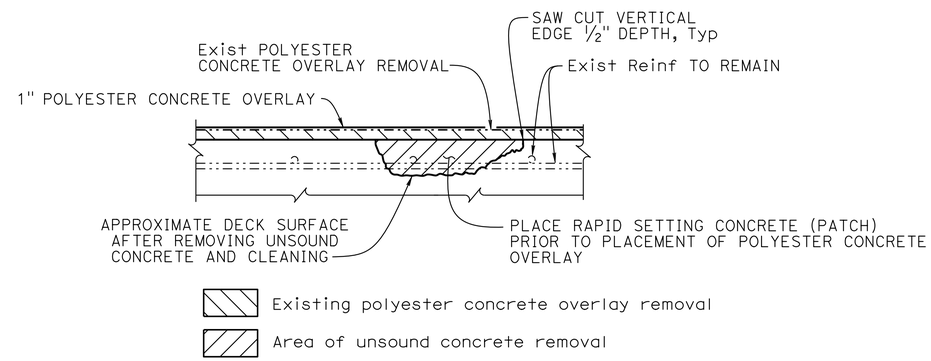

DECK REPAIR DETAIL

No Scale

LOCATIONS TO BE DETERMINED BY THE ENGINEER. REINFORCEMENT MAY BE ENCOUNTERED DURING DECK CONCRETE REMOVAL AND IS TO REMAIN UNDAMAGED

BRIDGE DECK REPAIR TABLE

APPROXIMATE AREA DAMAGED (%)	APPROXIMATE DEPTH (in)	REMOVE UNSOUND CONCRETE ft^3	RAPID SETTING CONCRETE (PATCH) ft^3
5	3	37.5	37.5

NOTE:
THE CONTRACTOR MUST VERIFY ALL CONTROLLING FIELD DIMENSIONS BEFORE ORDERING OR FABRICATING ANY MATERIAL.

	BY	CHECKED
DESIGN	Art V Herrera	Mufeed Khalaf
DETAILS	Shadi Motalebi	Mufeed Khalaf
QUANTITIES	Ashraf Ahmed	Raman Guraya

STATE OF CALIFORNIA
DEPARTMENT OF TRANSPORTATION

DIVISION OF ENGINEERING SERVICES
STRUCTURE DESIGN
DESIGN BRANCH 3

BRIDGE NO. 02-0068
POST MILE 52.48

THOMPSON CREEK BRIDGE (WIDEN)
JOINT SEAL DETAILS

STRUCTURES DESIGN DETAIL SHEET (ENGLISH) (REV. 09-01-10)

ORIGINAL SCALE IN INCHES FOR REDUCED PLANS 0 1 2 3

UNIT: 3578
PROJECT NUMBER & PHASE: 02120000121
CONTRACT NO.: 02-4E6504

DISREGARD PRINTS BEARING EARLIER REVISION DATES

REVISION DATES: 6-1-15 11-16-15 12-30-15 1-12-16

SHEET 21 OF 32

FILE => 02-0068-n-jntdt.dgn

USERNAME => s115152 DATE PLOTTED => 23-AUG-2016 TIME PLOTTED => 06:19

DIST	COUNTY	ROUTE	POST MILES TOTAL PROJECT	SHEET No.	TOTAL SHEETS
02	Sis	96	R52.5/88.4	132	208

Mufeed Khalaf 5-27-16
REGISTERED CIVIL ENGINEER DATE

06-15-16
PLANS APPROVAL DATE

REGISTERED PROFESSIONAL ENGINEER
Mufeed Khalaf
No. 54260
Exp. 12-31-17
CIVIL
STATE OF CALIFORNIA

The State of California or its officers or agents shall not be responsible for the accuracy or completeness of scanned copies of this plan sheet.

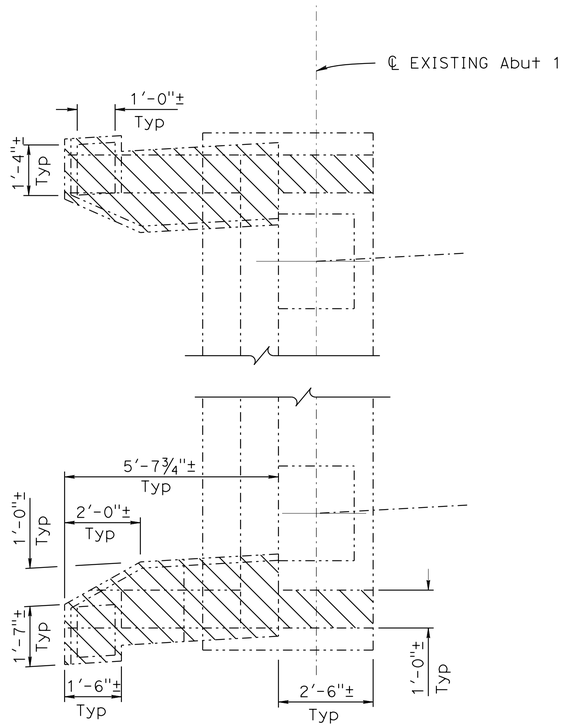

PART PLAN - ABUTMENT 1

½" = 1'-0"

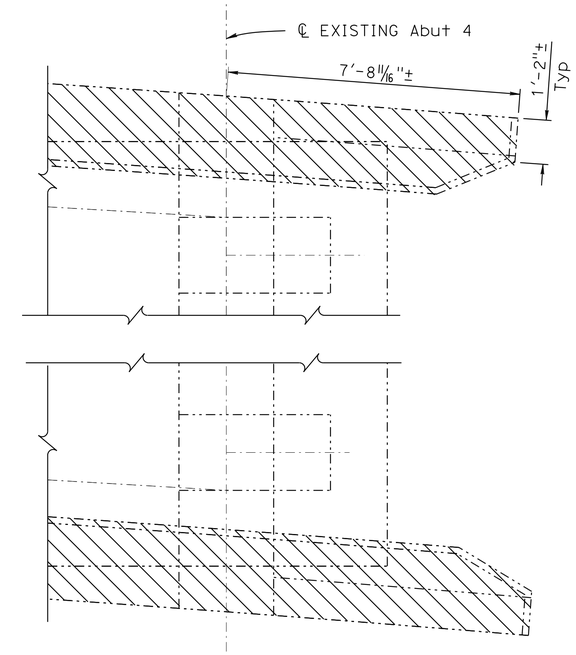

PART PLAN - ABUTMENT 4

½" = 1'-0"

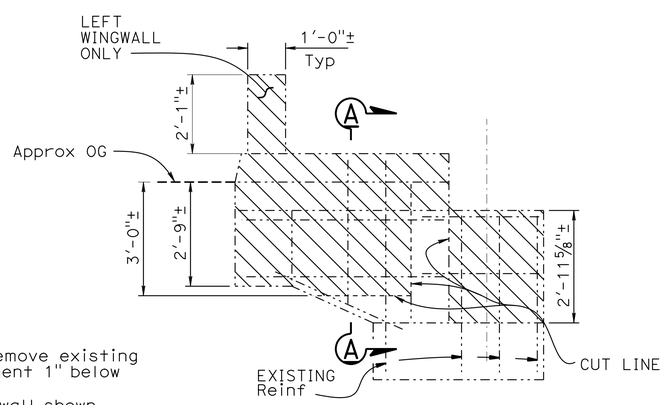

NOTES:
1. Cut and remove existing reinforcement 1" below cut line
2. Right Wingwall shown, Left Wingwall similar, exept as noted

RIGHT WINGWALL ELEVATION

½" = 1'-0"

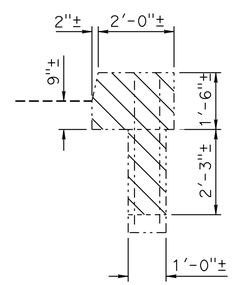

SECTION A-A

½" = 1'-0"

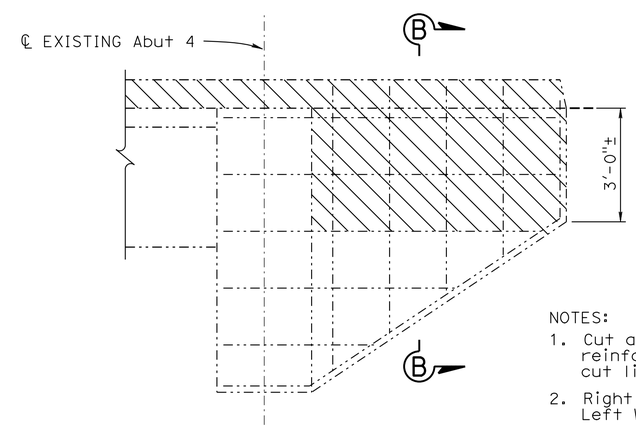

NOTES:
1. Cut and remove existing reinforcement 1" below cut line
2. Right Wingwall shown, Left Wingwall similar

RIGHT WINGWALL ELEVATION

½" = 1'-0"

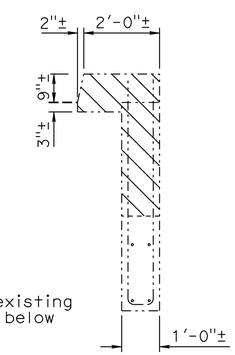

SECTION B-B

½" = 1'-0"

NOTE:
THE CONTRACTOR MUST VERIFY ALL CONTROLLING FIELD DIMENSIONS BEFORE ORDERING OR FABRICATING ANY MATERIAL.

LEGEND:

-·-·-·- Indicates existing bridge

▨ - Indicates existing bridge removal (Portion), Location A

	BY	CHECKED
DESIGN	Art V Herrera	Mufeed Khalaf
DETAILS	Shadi Motalebi	Mufeed Khalaf
QUANTITIES	Ashraf Ahmed	Raman Guraya

STATE OF CALIFORNIA
DEPARTMENT OF TRANSPORTATION

DIVISION OF ENGINEERING SERVICES
STRUCTURE DESIGN
DESIGN BRANCH 3

BRIDGE NO. 02-0068
POST MILE 52.48

THOMPSON CREEK BRIDGE (WIDEN)
BRIDGE REMOVAL DETAILS NO. 1

STRUCTURES DESIGN DETAIL SHEET (ENGLISH) (REV. 09-01-10)

ORIGINAL SCALE IN INCHES FOR REDUCED PLANS 0 1 2 3

UNIT: 3578
PROJECT NUMBER & PHASE: 02120000121
CONTRACT NO.: 02-4E6504

DISREGARD PRINTS BEARING EARLIER REVISION DATES

REVISION DATES 1-14-16 2-2-16 1-3-16

SHEET 22 OF 32

FILE => 02-0068-s-crem01.dgn

USERNAME => s113152 DATE PLOTTED => 23-AUG-2016 TIME PLOTTED => 06:19

DIST	COUNTY	ROUTE	POST MILES TOTAL PROJECT	SHEET No.	TOTAL SHEETS
02	Sis	96	R52.5/88.4	133	208

Mufeed Khalaf 5-27-16
REGISTERED CIVIL ENGINEER DATE

06-15-16
PLANS APPROVAL DATE

REGISTERED PROFESSIONAL ENGINEER
Mufeed Khalaf
No. 54260
Exp. 12-31-17
CIVIL
STATE OF CALIFORNIA

The State of California or its officers or agents shall not be responsible for the accuracy or completeness of scanned copies of this plan sheet.

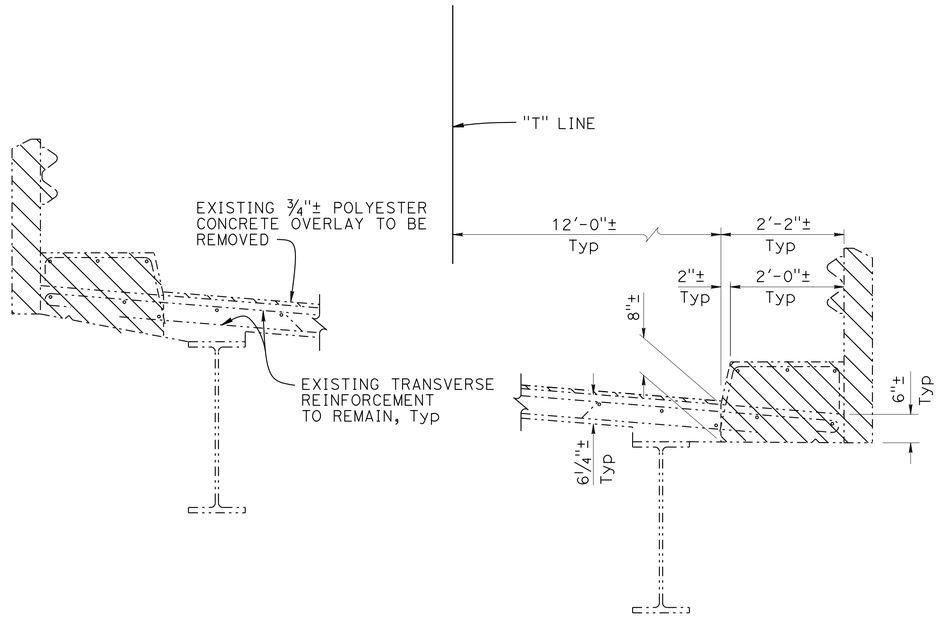

PART TYPICAL SECTION

¾" = 1'-0"

NOTE:
THE CONTRACTOR MUST VERIFY ALL CONTROLLING FIELD DIMENSIONS BEFORE ORDERING OR FABRICATING ANY MATERIAL.

LEGEND:

—··—··— Indicates existing bridge

▨ - Indicates existing bridge removal (portion), Location A

	BY	CHECKED
DESIGN	Art V Herrera	Mufeed Khalaf
DETAILS	Shadi Motalebi	Mufeed Khalaf
QUANTITIES	Ashraf Ahmed	Raman Guraya

STATE OF CALIFORNIA
DEPARTMENT OF TRANSPORTATION

DIVISION OF ENGINEERING SERVICES
STRUCTURE DESIGN
DESIGN BRANCH 3

BRIDGE NO. 02-0068
POST MILE 52.48

THOMPSON CREEK BRIDGE (WIDEN)
BRIDGE REMOVAL DETAILS NO. 2

STRUCTURES DESIGN DETAIL SHEET (ENGLISH) (REV. 09-01-10)

ORIGINAL SCALE IN INCHES FOR REDUCED PLANS 0 1 2 3

UNIT: 3578
PROJECT NUMBER & PHASE: 02120000121
CONTRACT NO.: 02-4E6504

DISREGARD PRINTS BEARING EARLIER REVISION DATES

REVISION DATES 4-15-15 10-2-15 12-29-15

SHEET 23 OF 32

FILE => 02-0068-s-crem02.dgn

USERNAME => s115152 DATE PLOTTED => 23-AUG-2016 TIME PLOTTED => 06:19

DIST	COUNTY	ROUTE	POST MILES TOTAL PROJECT	SHEET No.	TOTAL SHEETS
02	Sis	96	R52.5/88.4	134	208

Mufeed Khalaf 5-27-16
REGISTERED CIVIL ENGINEER DATE

06-15-16
PLANS APPROVAL DATE

REGISTERED PROFESSIONAL ENGINEER
Mufeed Khalaf
No. 54260
Exp. 12-31-17
CIVIL
STATE OF CALIFORNIA

The State of California or its officers or agents shall not be responsible for the accuracy or completeness of scanned copies of this plan sheet.

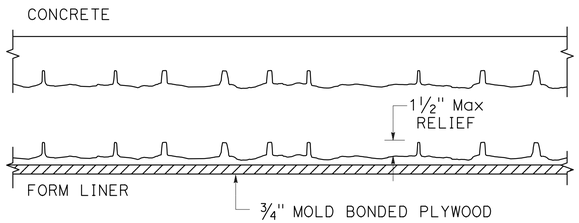

EXTERIOR SECTION A-A
NO SCALE

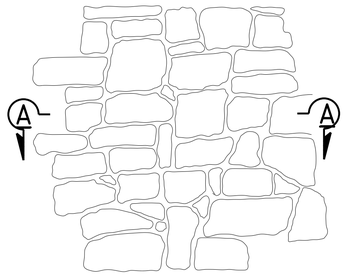

PATTERN ELEVATION
NO SCALE

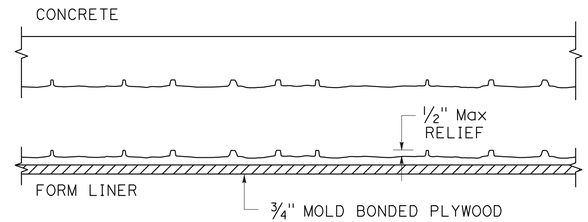

INTERIOR SECTION A-A
NO SCALE

RANDOM ROUGH STACKED ROCK TEXTURE DETAILS
NO SCALE

TEXTURE NOTES:

1. The contractor must verify all controlling dimensions and field conditions prior to ordering or fabricating any materials or assemblies for construction
2. RANDOM ROUGH STACKED ROCK TEXTURE:
   Texture relief to be ½" maximum at interior pattern
   Stone sizes shall be random
   2½" to 18" in width
   2" to 12" in height
3. RANDOM ROUGH STACKED ROCK TEXTURE:
   Texture relief to be 1½" maximum at exterior pattern
   Stone sizes shall be random
   2½" to 18" in width
   2" to 12" in height

NOTES:

1. Barrier concrete surface textures to have stain applied after construction
2. For "DETAIL A" and "DETAIL B", see "CONCRETE SURFACE TEXTURE Det No. 2" sheet
3. For rail details not shown, see "CALIFORNIA ST-70 BRIGDE RAIL", "DETAILS NO. 1" thru "DETAILS NO. 4" sheets

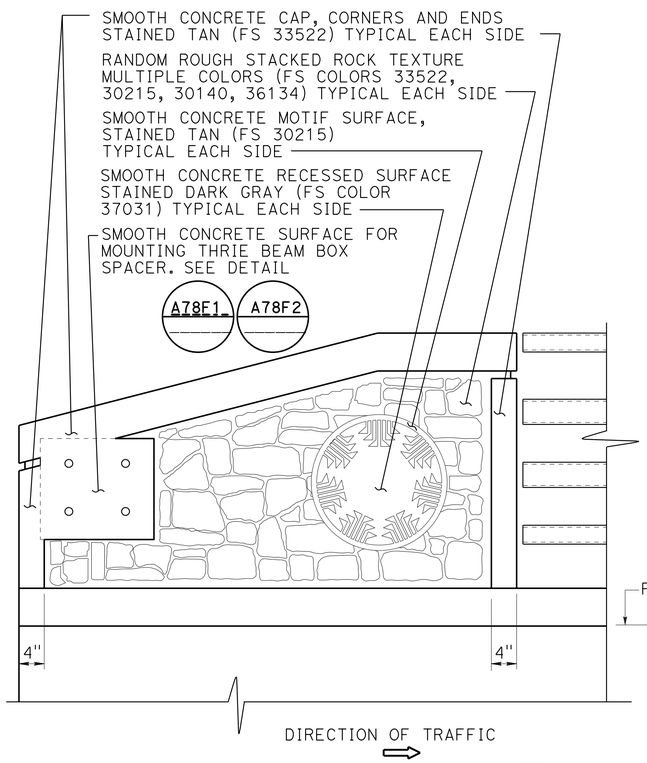

EXTERIOR ELEVATION
1" = 1'-0"

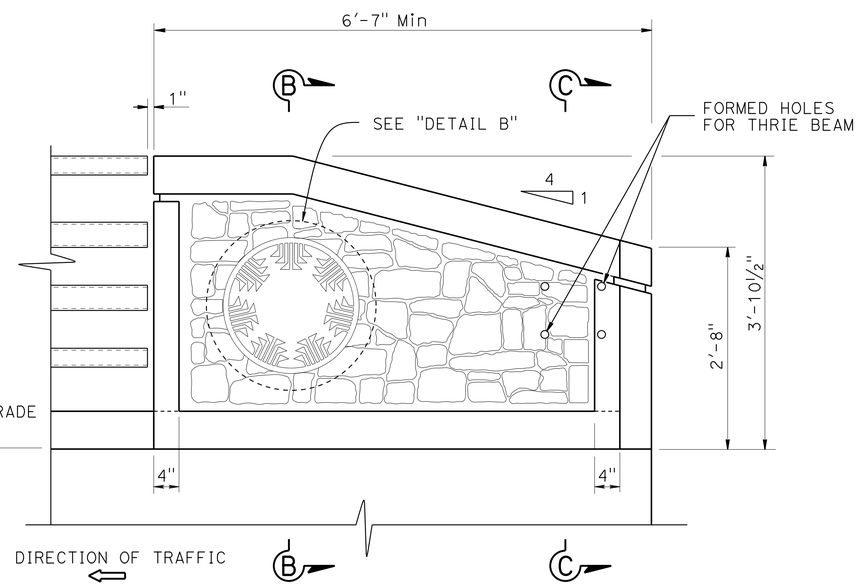

NOTE:
Tapered end block at both ends of barrier

INTERIOR ELEVATION
1" = 1'-0"

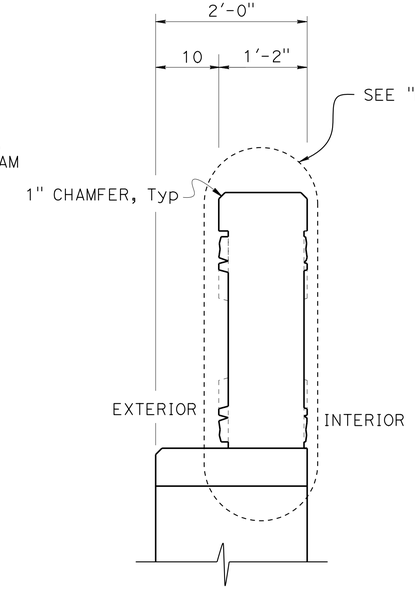

SECTION B-B
1" = 1'-0"

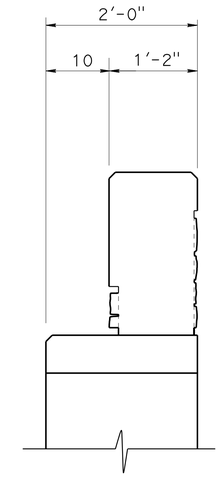

SECTION C-C
1" = 1'-0"

	BY	CHECKED
DESIGN	Stephan D Heath	Quincy Wong
DETAILS	Nancy Gwynn	Quincy Wong
QUANTITIES	Ashraf Ahmed	Raman Guraya

STATE OF CALIFORNIA
DEPARTMENT OF TRANSPORTATION

DIVISION OF ENGINEERING SERVICES
STRUCTURE DESIGN
DESIGN BRANCH 3

BRIDGE NO. 02-0068
POST MILE 52.48

THOMPSON CREEK BRIDGE (WIDEN)
CONCRETE SURFACE TEXTURE Det No. 1

STRUCTURES DESIGN DETAIL SHEET (ENGLISH) (REV. 09-01-10)

ORIGINAL SCALE IN INCHES FOR REDUCED PLANS 0 1 2 3

UNIT: 3578
PROJECT NUMBER & PHASE: 02120000121
CONTRACT NO.: 02-4E6504

DISREGARD PRINTS BEARING EARLIER REVISION DATES

REVISION DATES: 12-31-14 2-2-16 4-19-16

SHEET 24 OF 32

FILE => 02-0068-u-arch01.dgn

USERNAME => s115152 DATE PLOTTED => 23-AUG-2016 TIME PLOTTED => 06:19

DIST	COUNTY	ROUTE	POST MILES TOTAL PROJECT	SHEET No.	TOTAL SHEETS
02	Sis	96	R52.5/88.4	135	208

Mufeed Khalaf 5-27-16
REGISTERED CIVIL ENGINEER DATE

06-15-16
PLANS APPROVAL DATE

REGISTERED PROFESSIONAL ENGINEER Mufeed Khalaf No. 54260 Exp. 12-31-17 CIVIL STATE OF CALIFORNIA

The State of California or its officers or agents shall not be responsible for the accuracy or completeness of scanned copies of this plan sheet.

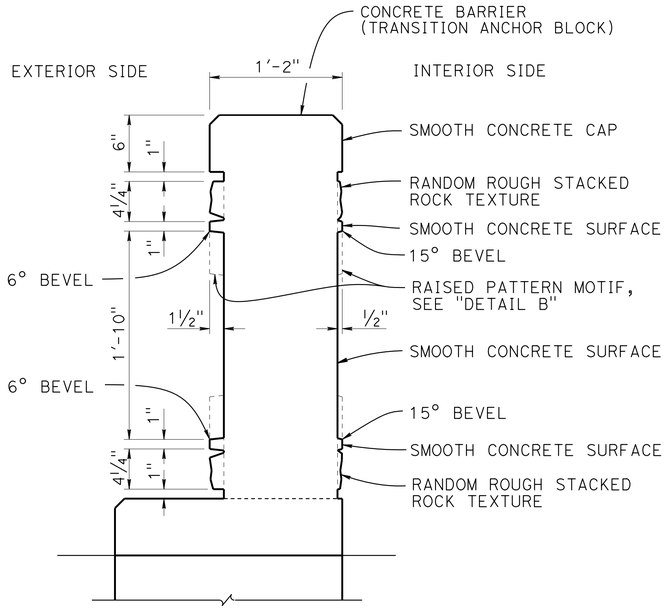

DETAIL A

1½" = 1'-0"

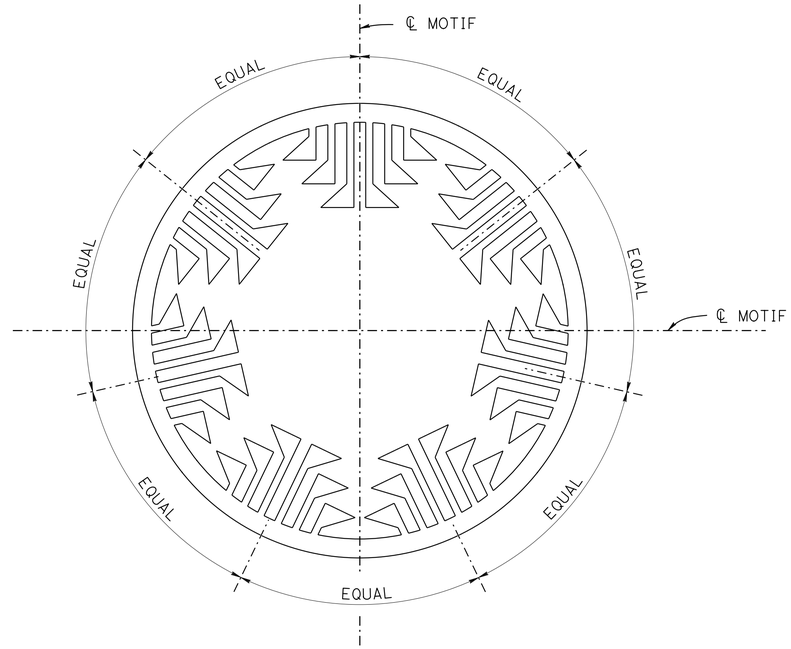

DETAIL B

3" = 1'-0"

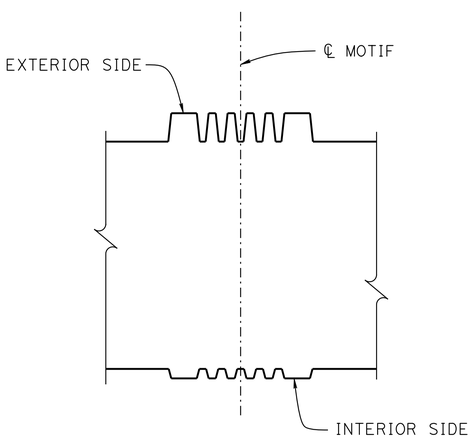

SECTION E-E

3" = 1'-0"

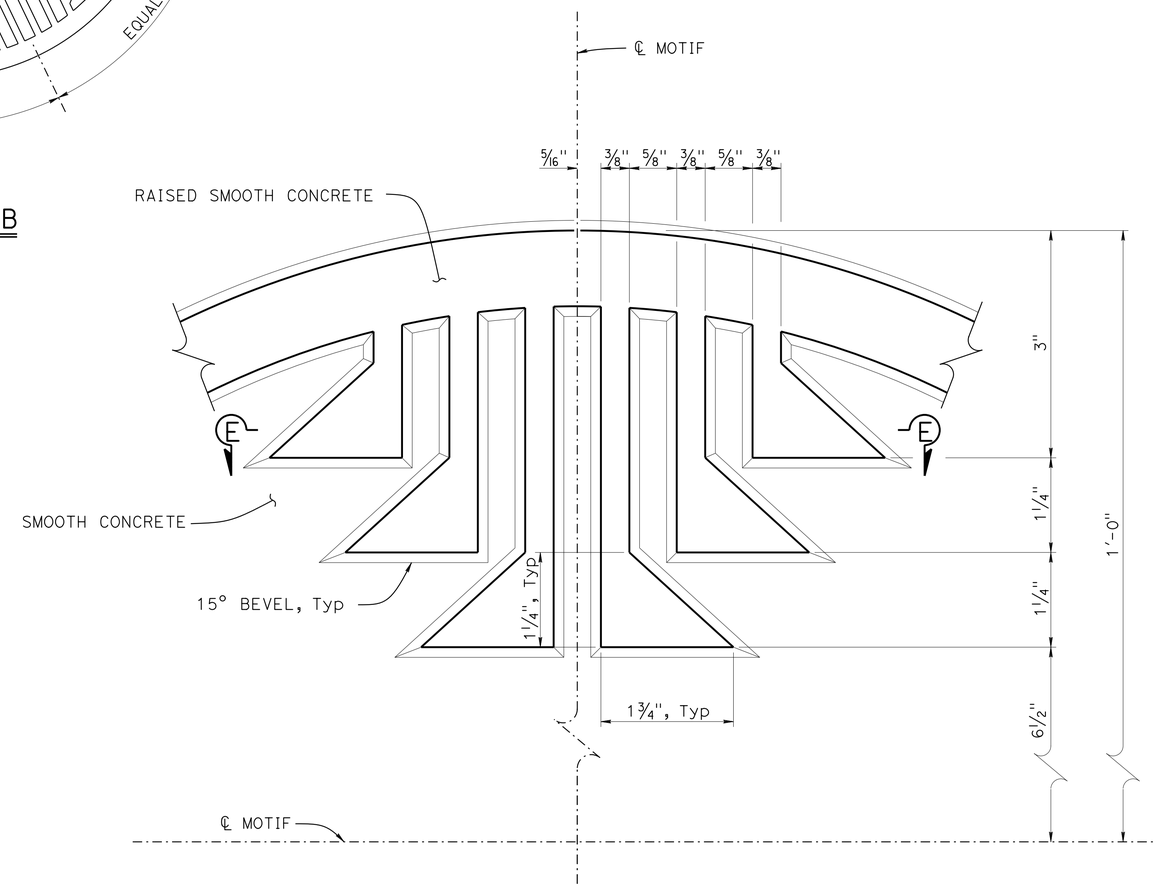

PART DETAIL B

FULL SCALE

DESIGN	BY Stephan D Heath	CHECKED Quincy Wong	
DETAILS	BY Nancy Gwynn	CHECKED Quincy Wong	
QUANTITIES	BY Ashraf Ahmed	CHECKED Raman Guraya	

STATE OF CALIFORNIA
DEPARTMENT OF TRANSPORTATION

DIVISION OF ENGINEERING SERVICES
STRUCTURE DESIGN
DESIGN BRANCH 3

BRIDGE NO. 02-0068
POST MILE 52.48

THOMPSON CREEK BRIDGE (WIDEN)
CONCRETE SURFACE TEXTURE Det No. 2

STRUCTURES DESIGN DETAIL SHEET (ENGLISH) (REV. 09-01-10)

ORIGINAL SCALE IN INCHES FOR REDUCED PLANS 0 1 2 3

UNIT: 3578
PROJECT NUMBER & PHASE: 02120000121
CONTRACT NO.: 02-4E6504

DISREGARD PRINTS BEARING EARLIER REVISION DATES

REVISION DATES 12-31-14 12-31-15 4-19-16

SHEET 25 OF 32

FILE => 02-0068-u-arch02.dgn

USERNAME => s113152 DATE PLOTTED => 23-AUG-2016 TIME PLOTTED => 06:19

DIST	COUNTY	ROUTE	POST MILES TOTAL PROJECT	SHEET No.	TOTAL SHEETS
02	Sis	96	R52.5/88.4	136	208

Mufeed Khalaf 5-27-16
REGISTERED CIVIL ENGINEER DATE

06-15-16
PLANS APPROVAL DATE

REGISTERED PROFESSIONAL ENGINEER
Mufeed Khalaf
No. 54260
Exp. 12-31-17
CIVIL
STATE OF CALIFORNIA

The State of California or its officers or agents shall not be responsible for the accuracy or completeness of scanned copies of this plan sheet.

LEGEND:

25% CONCRETE STAIN
FEDERAL STANDARD 595C #30140
(DARK BROWN)

25% CONCRETE STAIN
FEDERAL STANDARD 595C #30215
(RED BROWN)

25% CONCRETE STAIN
FEDERAL STANDARD 595C #33522
(MEDIUM TAN)

25% CONCRETE STAIN
FEDERAL STANDARD 595C #36134
(MEDIUM DARK GRAY)

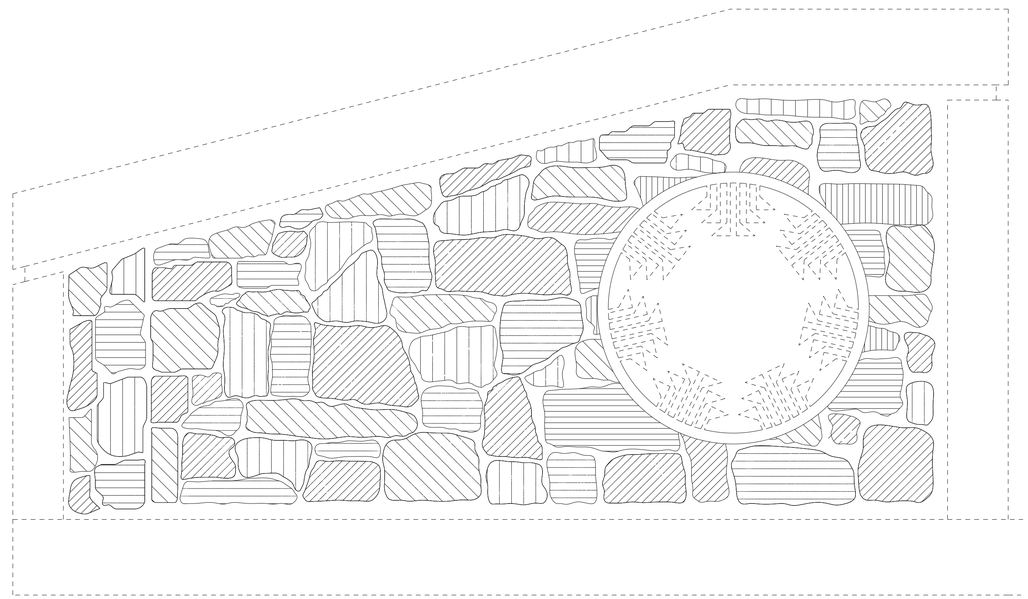

BARRIER ELEVATION

DESIGN	BY Stephan D Heath	CHECKED Quincy Wong
DETAILS	BY Nancy Gwynn	CHECKED Quincy Wong
QUANTITIES	BY Ashraf Ahmed	CHECKED Raman Guraya

STATE OF CALIFORNIA
DEPARTMENT OF TRANSPORTATION

DIVISION OF ENGINEERING SERVICES
STRUCTURE DESIGN
DESIGN BRANCH 3

BRIDGE NO. 02-0068
POST MILE 52.48

THOMPSON CREEK BRIDGE (WIDEN)
CONCRETE SURFACE TEXTURE Det No. 3

STRUCTURES DESIGN DETAIL SHEET (ENGLISH) (REV. 09-01-10)

ORIGINAL SCALE IN INCHES FOR REDUCED PLANS 0 1 2 3

UNIT: 3578
PROJECT NUMBER & PHASE: 02120000121
CONTRACT NO.: 02-4E6504

DISREGARD PRINTS BEARING EARLIER REVISION DATES

REVISION DATES 12-21-14 12-2-15 4-19-16

SHEET 26 OF 32

FILE => 02-0068-u-arch03.dgn

USERNAME => s115152 DATE PLOTTED => 23-AUG-2016 TIME PLOTTED => 06:19

DIST	COUNTY	ROUTE	POST MILES TOTAL PROJECT	SHEET No.	TOTAL SHEETS
02	Sis	96	R52.5/88.4	137	208

Mufeed Khalaf 5-27-16
REGISTERED CIVIL ENGINEER DATE

06-15-16
PLANS APPROVAL DATE

REGISTERED PROFESSIONAL ENGINEER
Mufeed Khalaf
No. 54260
Exp. 12-31-17
CIVIL
STATE OF CALIFORNIA

The State of California or its officers or agents shall not be responsible for the accuracy or completeness of electronic copies of this plan sheet.

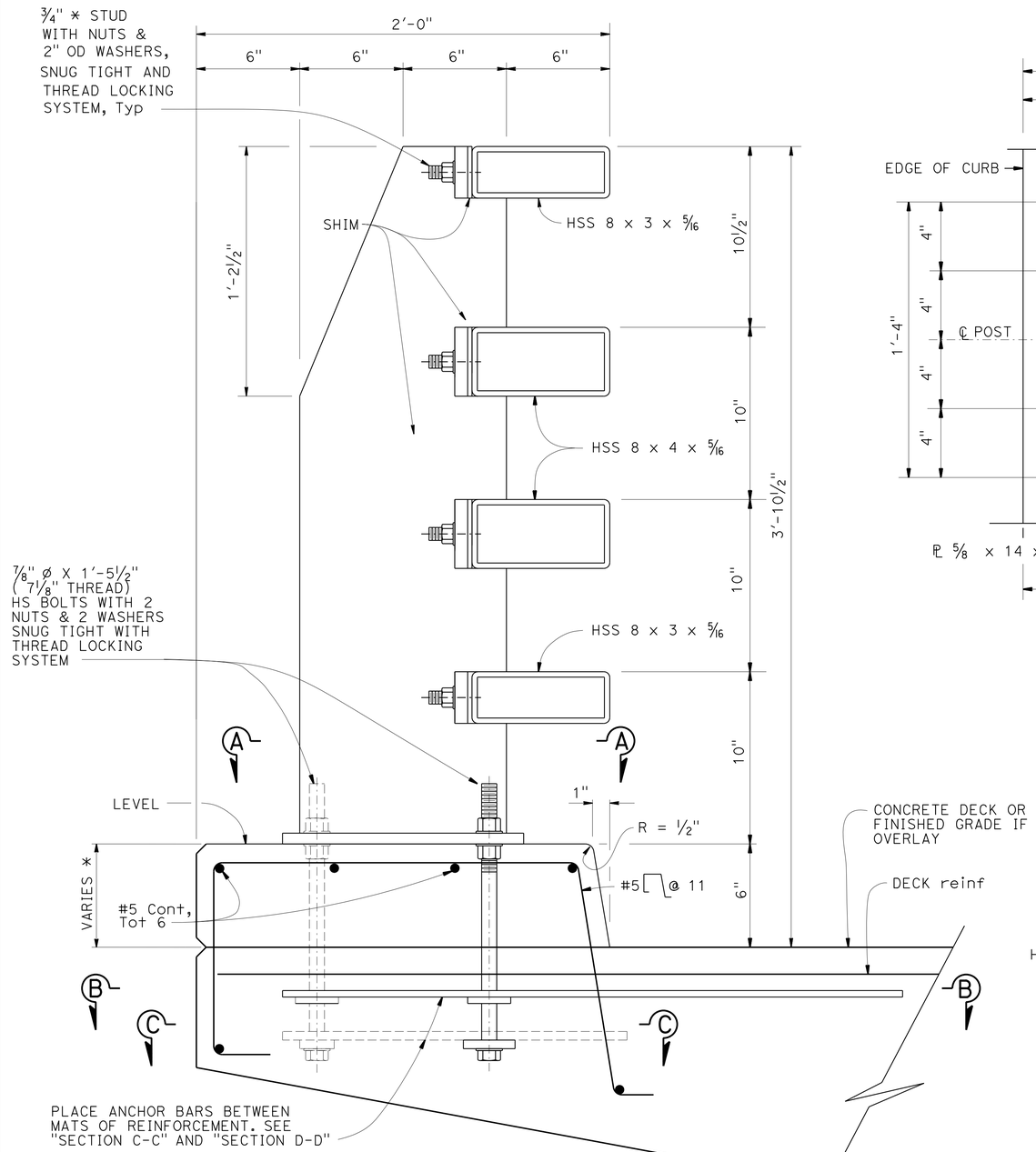

* DIMENSION VARIES WITH ROADWAY CROSS SLOPE AND WITH THICKNESS OF OVERLAY IF APPLICABLE.

TYPICAL SECTION
3" = 1'-0"

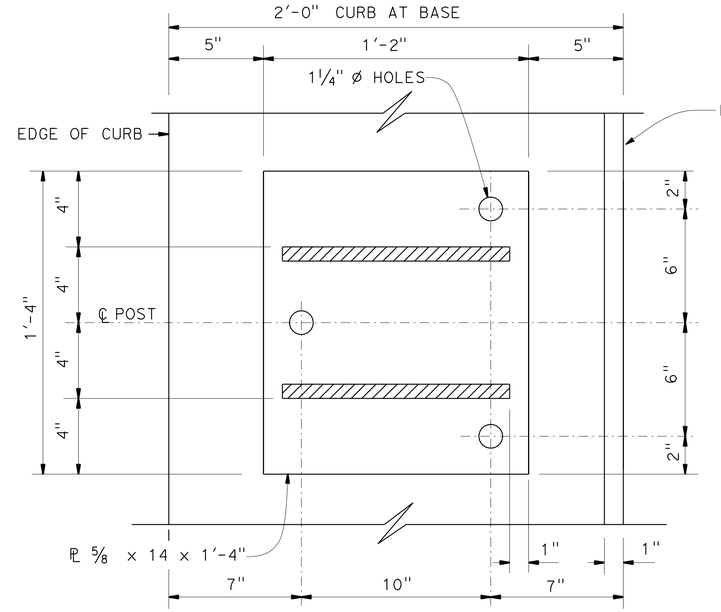

SECTION A-A
3' = 1'-0"

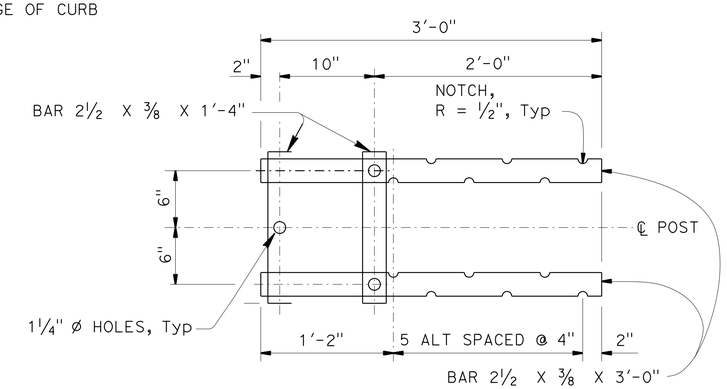

SECTION B-B
1½" = 1'-0"

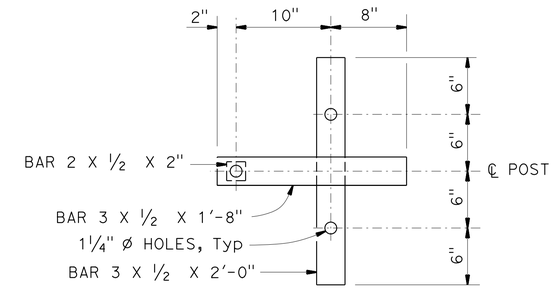

SECTION C-C
1½" = 1'-0"

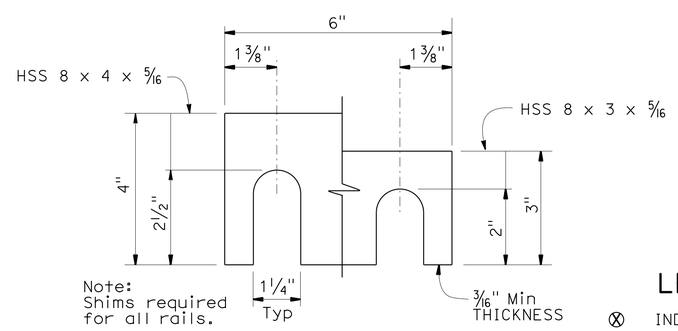

Note:
Shims required for all rails.

SHIM DETAIL
6" = 1'-0"

LEGEND:

⊗ INDICATES STUD WELD

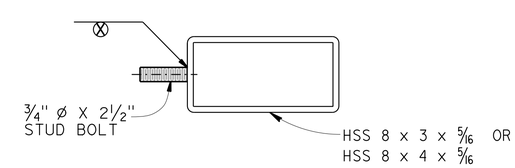

SECTION AT POST
3" = 1'-0"

THOMPSON CREEK BRIDGE (WIDEN)
CALIFORNIA ST-70 BRIDGE RAIL
DETAILS No. 1

STANDARD DRAWING

FILE NO. **xs16-130-1**

APPROVAL DATE January 2015

The components of this Bridge Standard Drawing have been prepared under the responsible charge of the Technical Owner, a registered civil engineer in the State of California. Refer to: http://www.dot.ca.gov/hq/esc/techpubs/manual/bridgemanuals/bridge-standard-detail-sheet/index.html. The selection and proper application of the component design and any modifications shown have been prepared under the responsible charge of the registered civil engineer for the project.

STATE OF CALIFORNIA
DEPARTMENT OF TRANSPORTATION

DIVISION OF ENGINEERING SERVICES

BRIDGE NO. 02-0068
POST MILE 52.48

DS OSD 2147A (ENGLISH STANDARD DRAWING "XS" BORDER REV. (02-02-11)

ORIGINAL SCALE IN INCHES FOR REDUCED PLANS 0 1 2 3

UNIT: 3578
PROJECT NUMBER & PHASE: 02120000121
CONTRACT NO.: 02-4E6504

DISREGARD PRINTS BEARING EARLIER REVISION DATES →

REVISION DATES 6-14-14 12-19-14 1-14-15

SHEET 27 OF 32

FILE => 02-0068-x-brdt01.dgn

USERNAME => s115152 DATE PLOTTED => 23-AUG-2016 TIME PLOTTED => 06:19

DIST	COUNTY	ROUTE	POST MILES TOTAL PROJECT	SHEET No.	TOTAL SHEETS
02	Sis	96	R52.5/88.4	138	208

Mufeed Khalaf 5-27-16
REGISTERED CIVIL ENGINEER DATE

06-15-16
PLANS APPROVAL DATE

REGISTERED PROFESSIONAL ENGINEER Mufeed Khalaf No. 54260 Exp. 12-31-17 CIVIL STATE OF CALIFORNIA

The State of California or its officers or agents shall not be responsible for the accuracy or completeness of electronic copies of this plan sheet.

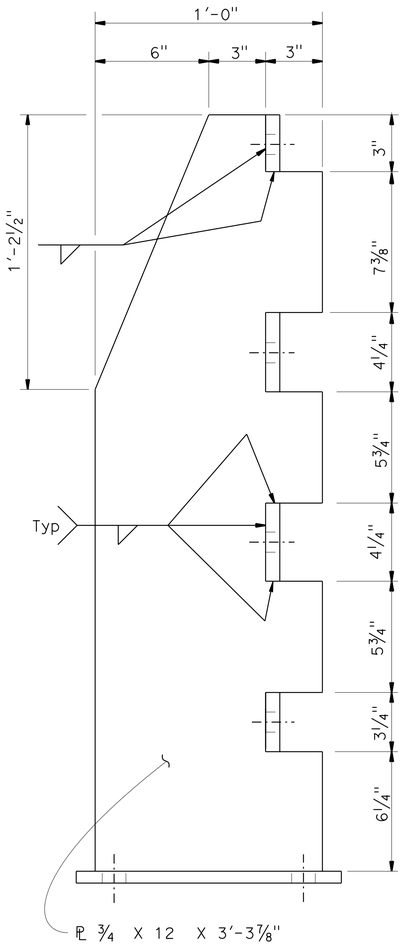

SECTION D-D

3" = 1'-0"

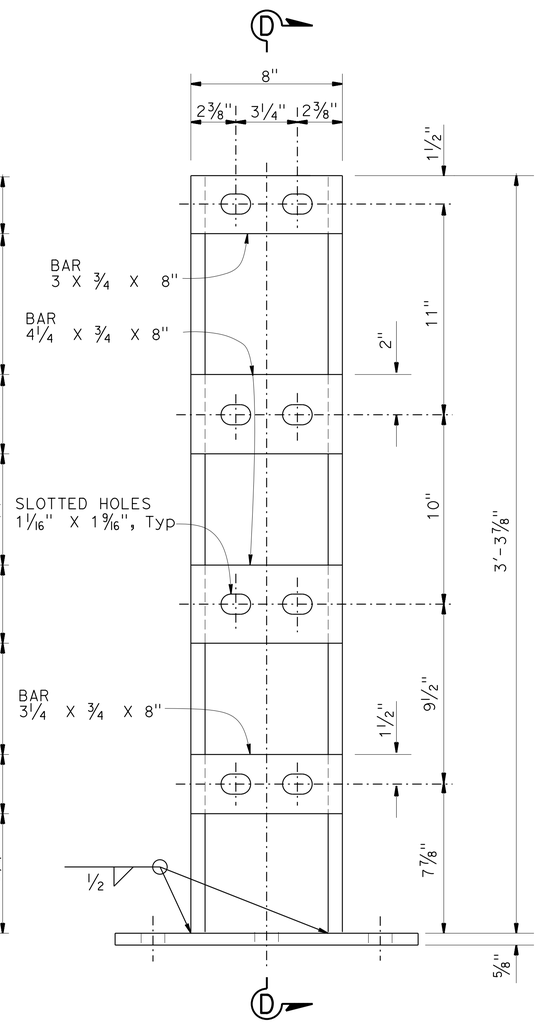

ELEVATION

3" = 1'-0"

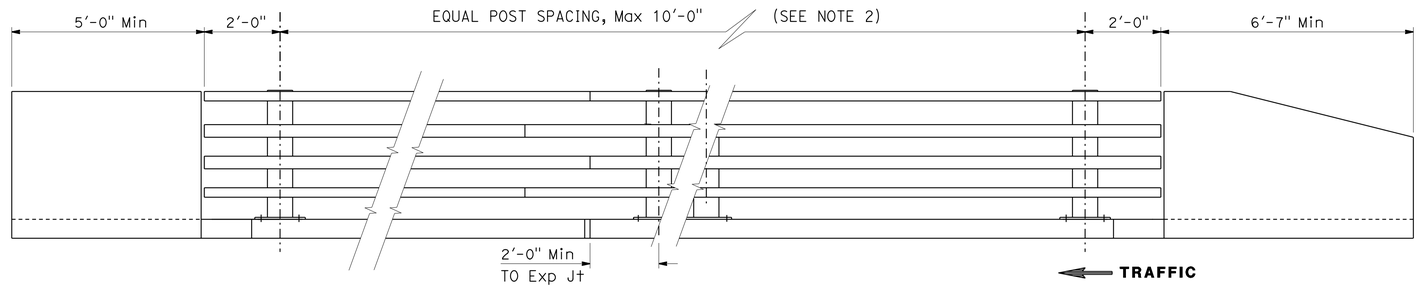

ELEVATION

½" = 1'-0"

NOTES:

1. For approach and departure end details, see "DETAILS No. 3" sheet.
2. Post spacing and/or block length to be adjusted to fit bridge length or wingwall length.
3. All horizontal members are parallel to longitudinal profile grade of deck.
4. Posts are normal to profile grade of structure.
5. Posts are vertical to the transverse cross section.

THOMPSON CREEK BRIDGE (WIDEN)

CALIFORNIA ST-70 BRIDGE RAIL

DETAILS No. 2

STANDARD DRAWING

FILE NO. xs16-130-2

APPROVAL DATE January 2015

The components of this Bridge Standard Drawing have been prepared under the responsible charge of the Technical Owner, a registered civil engineer in the State of California. Refer to: http://www.dot.ca.gov/hq/esc/techpubs/manual/bridgemanuals/bridge-standard-detail-sheet/index.html. The selection and proper application of the component design and any modifications shown have been prepared under the responsible charge of the registered civil engineer for the project.

STATE OF CALIFORNIA DEPARTMENT OF TRANSPORTATION

DIVISION OF ENGINEERING SERVICES

BRIDGE NO. 02-0068

POST MILE 52.48

DS OSD 2147A (ENGLISH STANDARD DRAWING "XS" BORDER REV. (02-02-11)

ORIGINAL SCALE IN INCHES FOR REDUCED PLANS 0 1 2 3

UNIT: 3578
PROJECT NUMBER & PHASE: 02120000121

CONTRACT NO.: 02-4E6504

DISREGARD PRINTS BEARING EARLIER REVISION DATES

REVISION DATES 6-14-14 12-19-14 1-14-15 1-12-16

SHEET 28 OF 32

FILE => 02-0068-x-brdt02.dgn

USERNAME => s115152 DATE PLOTTED => 23-AUG-2016 TIME PLOTTED => 06:19

DIST	COUNTY	ROUTE	POST MILES TOTAL PROJECT	SHEET No.	TOTAL SHEETS
02	Sis	96	R52.5/88.4	139	208

Mufeed Khalaf 5-27-16
REGISTERED CIVIL ENGINEER DATE

06-15-16
PLANS APPROVAL DATE

REGISTERED PROFESSIONAL ENGINEER Mufeed Khalaf No. 54260 Exp. 12-31-17 CIVIL STATE OF CALIFORNIA

The State of California or its officers or agents shall not be responsible for the accuracy or completeness of electronic copies of this plan sheet.

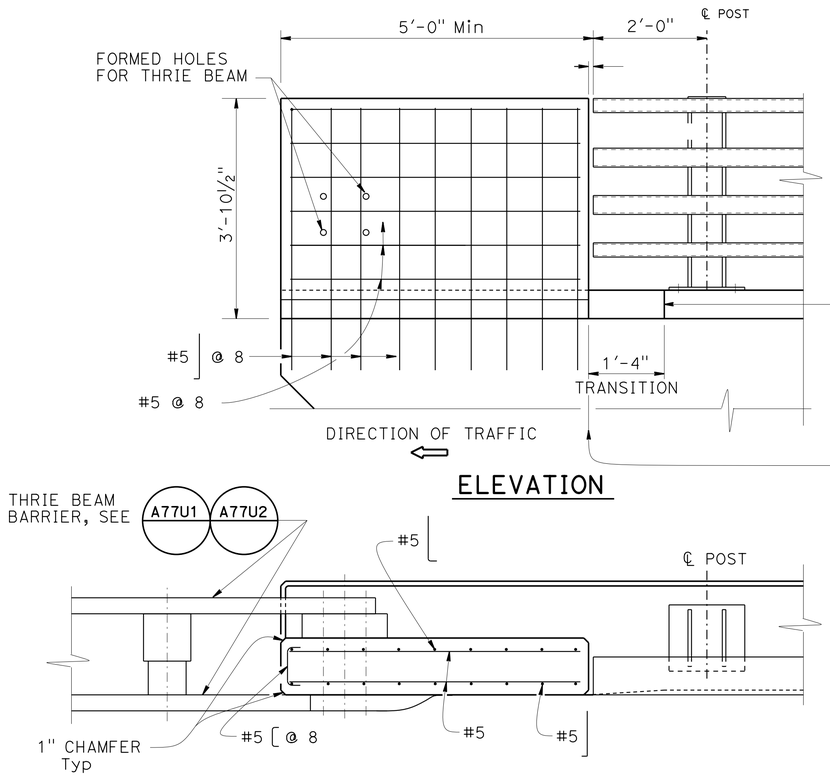

END BLOCK DETAIL
¾" = 1'-0"

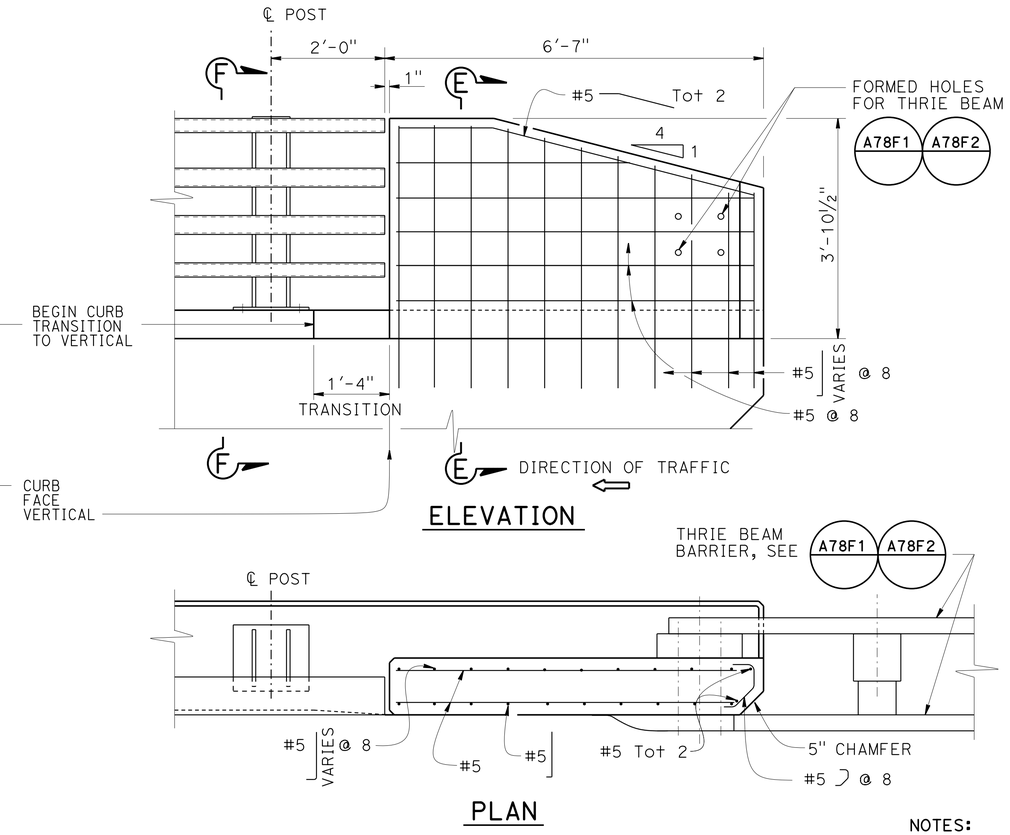

TRANSITION BLOCK DETAIL
¾" = 1'-0"

NOTES:

1. Anchor bolts may be tack welded (shop or field) to anchorage.
2. Each rail length must be continuous over a minimum of two posts.
3. The fabricator must check that the tubular sleeve splices conform to the dimensions indicated to assure proper clearance.
4. Except for expansion splices, not more than one splice permitted per same side of post.

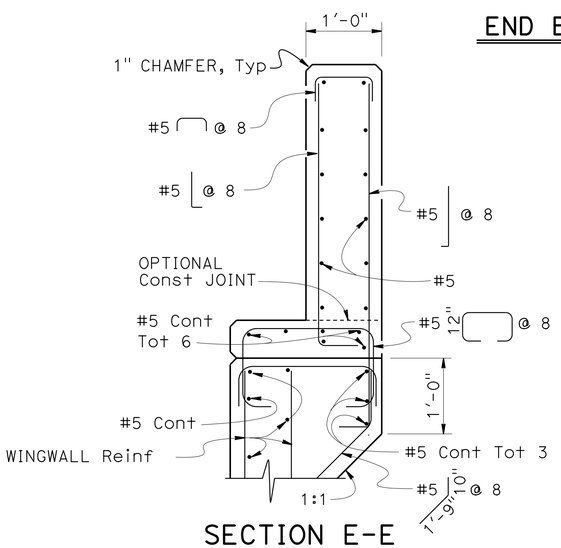

SECTION E-E
1' = 1'-0"

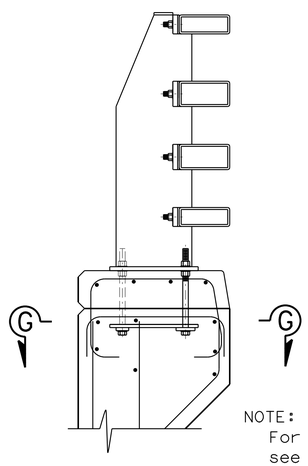

SECTION F-F
1" = 1'-0"

NOTE:
For details not shown, see "SECTION E-E"

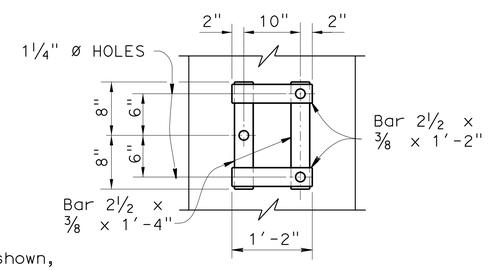

VIEW G-G
NO SCALE

THOMPSON CREEK BRIDGE (WIDEN)
CALIFORNIA ST-70 BRIDGE RAIL
DETAILS No. 3

STANDARD DRAWING
FILE NO. xs16-130-3
APPROVAL DATE January 2015

The components of this Bridge Standard Drawing have been prepared under the responsible charge of the Technical Owner, a registered civil engineer in the State of California. Refer to: http//www.dot.ca.gov/hq/esc/techpubs/manual/bridgemanuals/bridge-standard-detail-sheet/index.html. The selection and proper application of the component design and any modifications shown have been prepared under the responsible charge of the registered civil engineer for the project.

STATE OF CALIFORNIA
DEPARTMENT OF TRANSPORTATION

DIVISION OF ENGINEERING SERVICES

BRIDGE NO. 02-0068
POST MILE 52.48

DS OSD 2147A (ENGLISH STANDARD DRAWING "XS" BORDER REV. (02-02-11)

ORIGINAL SCALE IN INCHES FOR REDUCED PLANS 0 1 2 3

UNIT: 3578
PROJECT NUMBER & PHASE: 02120000121
CONTRACT NO.: 02-4E6504

DISREGARD PRINTS BEARING EARLIER REVISION DATES
REVISION DATES 6-14-14 12-19-14 1-14-15 1-12-16
SHEET 29 OF 32

FILE => 02-0068-x-brdt03.dgn

USERNAME => s115152 DATE PLOTTED => 23-AUG-2016 TIME PLOTTED => 06:19

DIST	COUNTY	ROUTE	POST MILES TOTAL PROJECT	SHEET No.	TOTAL SHEETS
02	Sis	96	R52.5/88.4	140	208

Mufeed Khalaf 5-27-16
REGISTERED CIVIL ENGINEER DATE

06-15-16
PLANS APPROVAL DATE

REGISTERED PROFESSIONAL ENGINEER
Mufeed Khalaf
No. 54260
Exp. 12-31-17
CIVIL
STATE OF CALIFORNIA

The State of California or its officers or agents shall not be responsible for the accuracy or completeness of electronic copies of this plan sheet.

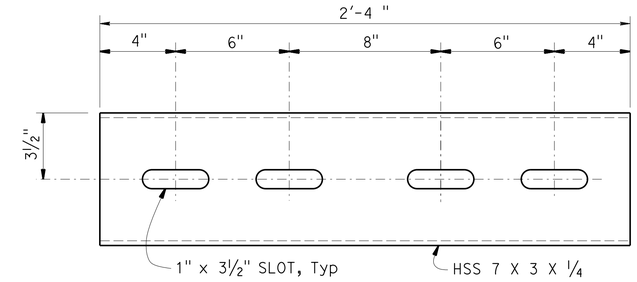

(FOR HSS 8 X 4 X 5/16 RAIL)

STANDARD SLEEVE DETAIL

3" = 1'-0"

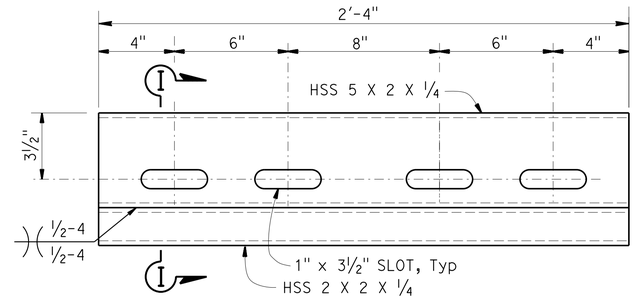

(FOR HSS 8 X 3 X 5/16 RAIL)

STANDARD SLEEVE DETAIL

3" = 1'-0"

NOTES:

1. HS bolts with nut and washers, snug tightened, and thread locking system.
2. Use ¾"Ø X 4 5/16 (HSS 8 X 3 X 5/16)
   Use ¾"Ø X 5 5/16 (HSS 8 X 4 X 5/16)

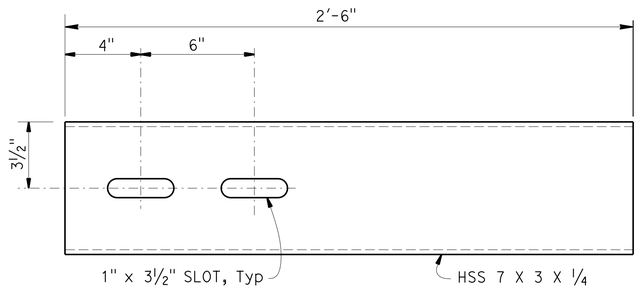

(FOR HSS 8 X 4 X 5/16 RAIL)

EXPANSION SLEEVE DETAIL

3" = 1'-0"

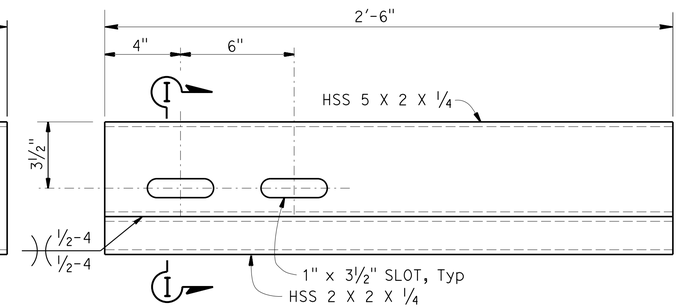

(FOR HSS 8 X 3 X 5/16 RAIL)

EXPANSION SLEEVE DETAIL

3" = 1'-0"

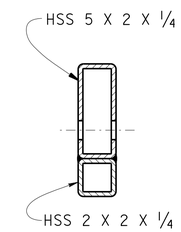

SECTION I-I

3" = 1'-0"

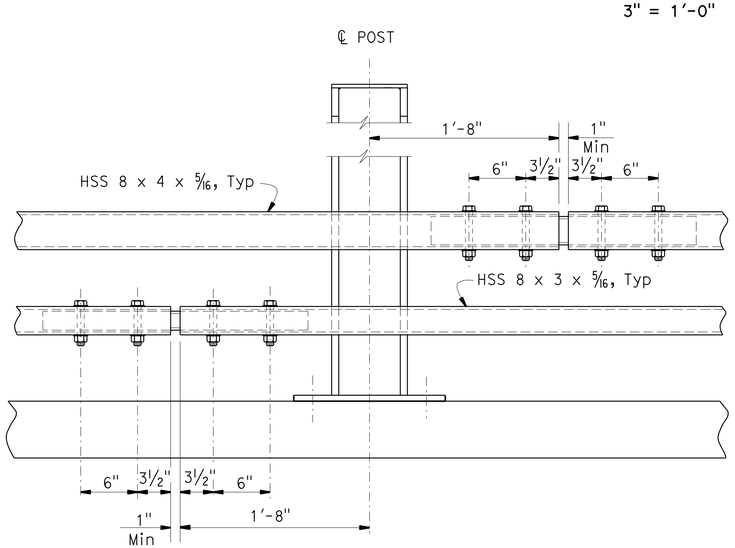

STANDARD SPLICE

1½" = 1'-0"

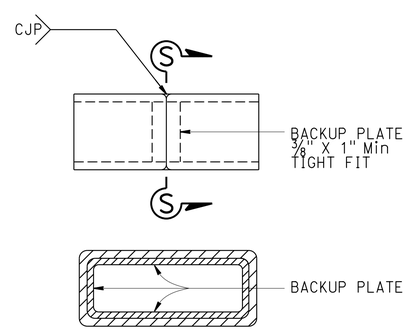

SECTION S-S

ALTERNATE TUBE WELDED SPLICE

1½" = 1'-0"

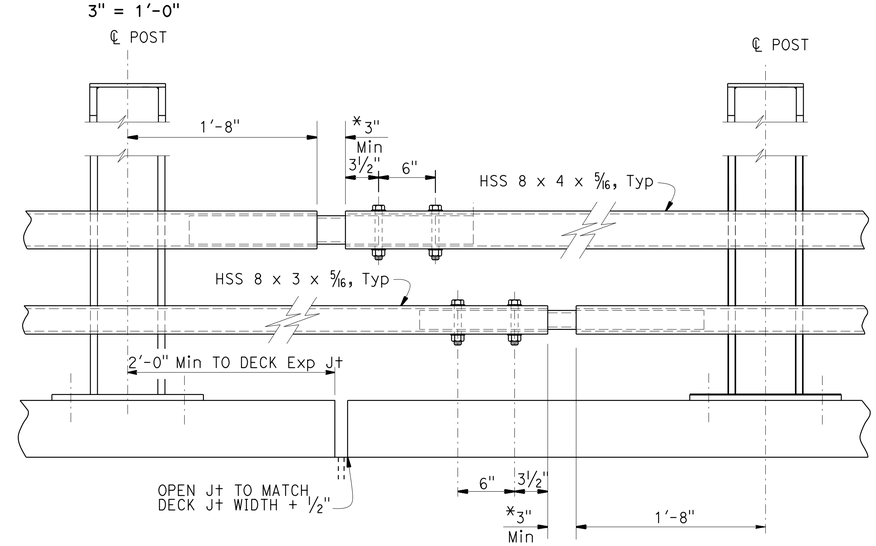

EXPANSION SPLICE

1½" = 1'-0"
* MATCH DECK OR WALL JOINT

STANDARD DRAWING

FILE NO. xs16-130-4

APPROVAL DATE January 2015

The components of this Bridge Standard Drawing have been prepared under the responsible charge of the Technical Owner, a registered civil engineer in the State of California. Refer to: http//www.dot.ca.gov/hq/esc/techpubs/manual/bridgemanuals/bridge-standard-detail-sheet/index.html. The selection and proper application of the component design and any modifications shown have been prepared under the responsible charge of the registered civil engineer for the project.

STATE OF CALIFORNIA
DEPARTMENT OF TRANSPORTATION

DIVISION OF ENGINEERING SERVICES

BRIDGE NO. 02-00068
POST MILE 52.48

THOMPSON CREEK BRIDGE (WIDEN)

CALIFORNIA ST-70 BRIDGE RAIL

DETAILS No. 4

DS OSD 2147A (ENGLISH STANDARD DRAWING "XS" BORDER REV. (02-02-11)

ORIGINAL SCALE IN INCHES FOR REDUCED PLANS 0 1 2 3

UNIT: 3578
PROJECT NUMBER & PHASE: 02120000121
CONTRACT NO.: 02-4E6504

DISREGARD PRINTS BEARING EARLIER REVISION DATES

REVISION DATES 6-14-14 12-18-14 1-14-15

SHEET 30 OF 32

FILE => 02-0068-x-brdt04.dgn

USERNAME => s115152 DATE PLOTTED => 23-AUG-2016 TIME PLOTTED => 06:19

DIST	COUNTY	ROUTE	POST MILES TOTAL PROJECT	SHEET No	TOTAL SHEETS
02	Sis	96	R52.5/88.4	141	208

PROFESSIONAL GEOLOGIST 2-3-16

06-15-16
PLANS APPROVAL DATE

PROFESSIONAL GEOLOGIST Timothy Alan Alderman No. 9302 Exp. 9-30-17 STATE OF CALIFORNIA

The State of California or its officers or agents shall not be responsible for the accuracy or completeness of electronic copies of this plan sheet.

This LOTB sheet was prepared in accordance with the Caltrans Soil & Rock Logging, Classification, & Presentation Manual (2010 Edition).

See 2010 Standard Plans A10F and A10G for Soil Legend, and A10H for Rock Legend.

BENCH MARK

CM 52.47
Fnd ¾" Rebar w/ Alum Cap
30.53 FT Lt "T" LINE ℄ Rte 96
Sta 10+80.18
N 2,564,607.48
E 6,204,658.87
Elev = 1261.64

CM 52.51
Fnd ¾" Rebar w/ Alum Cap
19.58 FT Lt "T" LINE ℄ Rte 96
Sta 14+36.91
N 2,564,971.55
E 6,204,662.55
Elev = 1261.13

NAVD88

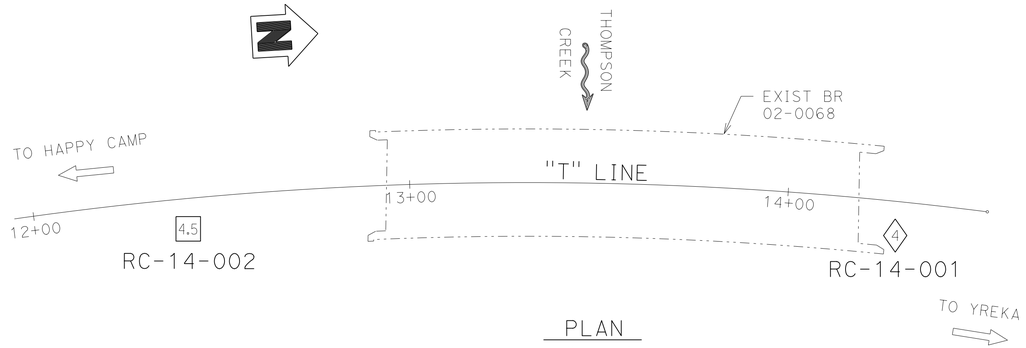

PLAN
1" = 20'

Note: Groundwater was encountered in Boring RC-14-002 but elevation was not measured.

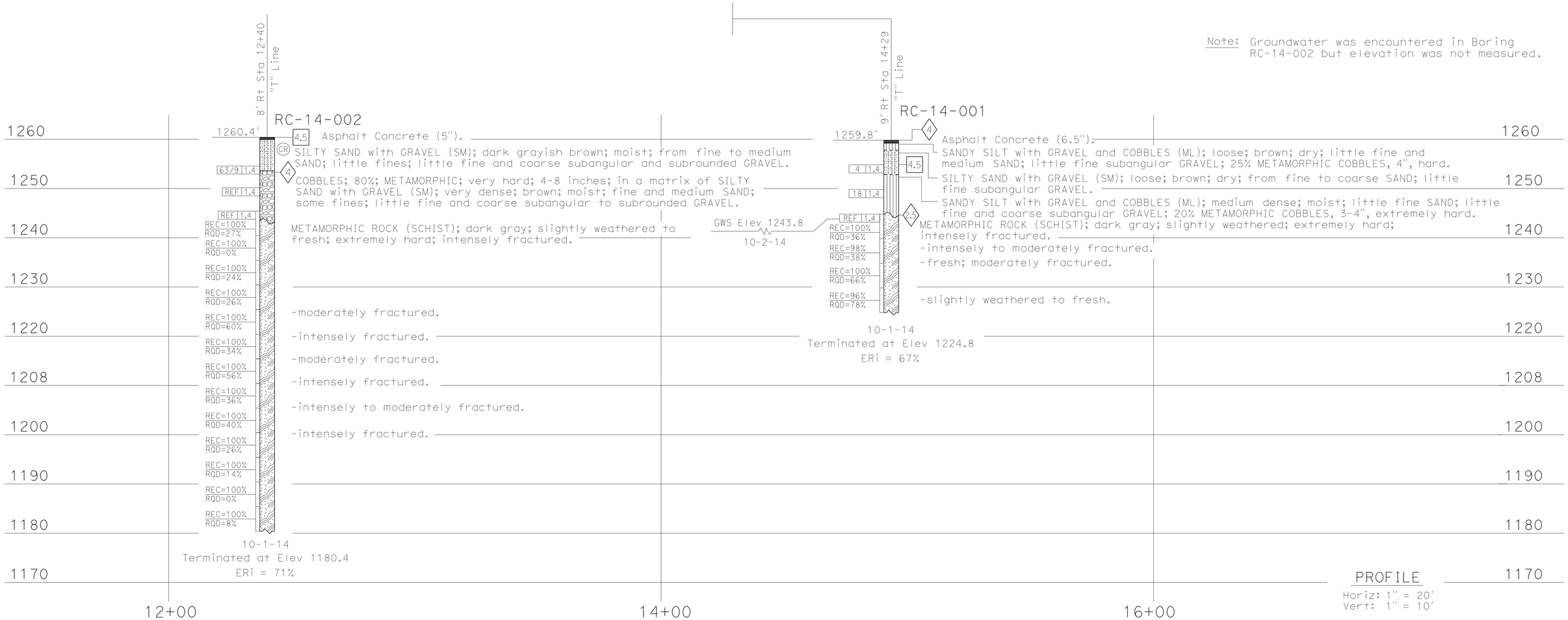

ENGINEERING SERVICES	MATERIALS AND GEOTECHNICAL SERVICES	STATE OF CALIFORNIA DEPARTMENT OF TRANSPORTATION	DIVISION OF ENGINEERING SERVICES STRUCTURE DESIGN DESIGN BRANCH 3	BRIDGE NO. 02-0068 / POST MILE 52.48	THOMPSON CREEK BRIDGE (WIDEN) LOG OF TEST BORINGS 1 OF 2
FUNCTIONAL SUPERVISOR NAME: A. Perez-Cobo	DRAWN BY: I. G-Remmen CHECKED BY: A. Barrie	FIELD INVESTIGATION BY: T. Alderman & D. Liao			

OGS CIVIL LOG OF TEST BORINGS SHEET

ORIGINAL SCALE IN INCHES FOR REDUCED PLANS 0 1 2 3

UNIT: 3650
PROJECT NUMBER & PHASE: 02120000121 CONTRACT NO.: 02-4E6504

DISREGARD PRINTS BEARING EARLIER REVISION DATES → REVISION DATES 01-26-16 02-03-16 SHEET 31 OF 32

FILE => 02-0068-z-1tb01.dgn

USERNAME => s115152 DATE PLOTTED => 23-AUG-2016 TIME PLOTTED => 06:19

PLANS APPROVAL DATE: 06-15-16

FED. ROAD DIST. NO.	STATE	F. A. PROJECT NO.	SHEET NO.	TOTAL SHEETS
7	CALIF.			

Dist.	County	Route	Post Mile	Sheet No.	Total Sheets
2	SIS	96	52.45	20	20

Steve Kinsella Chief Structure Design Office

Date approved May 24, 1965

LEGEND OF BORING OPERATIONS

- Penetrometer
- 2½" Core Penetrometer
- Sampler boring (dry)
- Rotary boring (wet)
- Auger boring (dry)
- Jet boring
- Core boring
- Test pit

LEGEND OF EARTH MATERIALS

- Gravel
- Sand
- Silt
- Clay
- Sandy Clay or Clayey Sand
- Sandy Silt or Silty Sand
- Silty Clay or Clayey Silt
- Peat muck, Organic Matter
- Fill Material
- Igneous Rock
- Sedimentary Rock
- Metamorphic Rock

CLASSIFICATION OF MATERIAL BASED ON STANDARD GRADE SIZE LIMITS

Diagram showing the area for estimates of grain size distribution used in determination of class names.

"Percent in adjacent" means the percentage of material in the adjacent class that is added to the class name, viz., "gravelly sand." The terms "gravel," "sand," "silt," and "clay" are used to describe sand, silt and gravel, refer to standard grain size limits.

NOTE: Classification of earth material as shown on this sheet is based upon field inspection and is not to be construed to imply mechanical analysis.

Field Study	
Drawn	By: R. Erickson 6-65
Checked	By: K. Goldschmidt 6-65
Approval Recommended by	Bridge Engineer

BRIDGE DEPARTMENT
ENGINEERING GEOLOGY SECTION

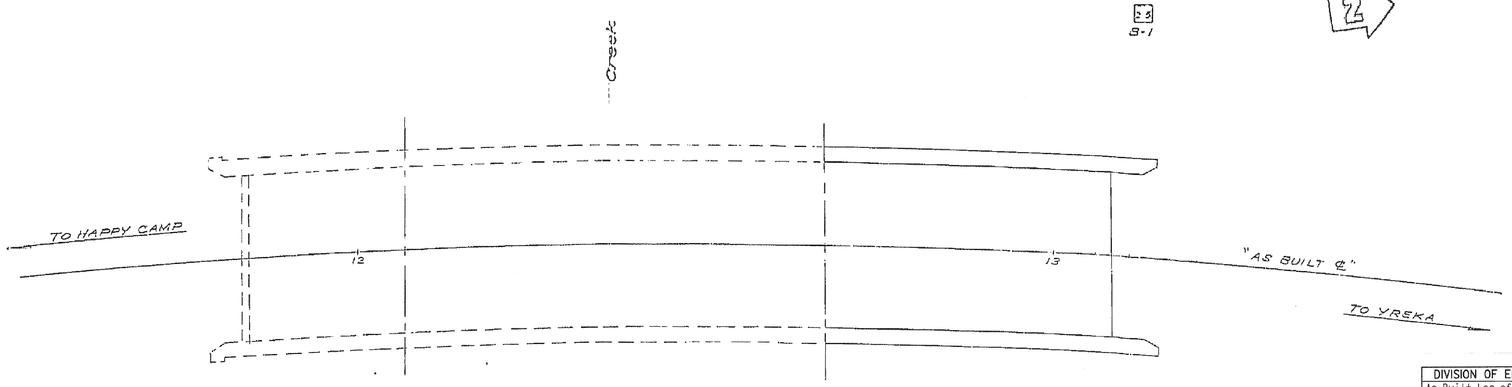

AS BUILT PLANS
Contract No. 14-059754
Date Completed
Document No. 20001010

DIVISION OF ENGINEERING SERVICES - MATERIALS AND GEOTECHNICAL SERVICES					
As-Built Log of Test Borings sheet is considered an informational document only. As such, the State of California registration seal with signature, license number and registration certificate expiration date confirm that this is a true and accurate copy of the original document. It does not attest to the accuracy or validity of the information contained in the original document. This drawing is available and presented only for the convenience of any bidder, contractor or other interested party.					
DIST.	COUNTY	ROUTE	POST MILE-TOTAL PROJECT	Sheet No.	Total Sheets
02	Sis	96	R52.5/88.4	142	208
PROFESSIONAL GEOLOGIST			DATE 2-3-2016		
THOMPSON CREEK BRIDGE (WIDEN)					
LOG OF TEST BORINGS 2 OF 2					
UNIT: 3650			CONTRACT No.	BRIDGE No.	
PROJ. No. & PHASE: 02120000121			02-4E6504	02-0068	
AS-BUILT VERT DATUM: NGVD29 CONVERSION: NGVD29 + 3.56 Ft				Sheet	of
NOTE: A COPY OF THIS LOG OF TEST BORINGS IS AVAILABLE AT OFFICE OF STRUCTURE MAINTENANCE AND INVESTIGATIONS, SACRAMENTO, CALIFORNIA				32	32

PROFESSIONAL GEOLOGIST
Timothy Alan Alderman
No. 9302
Exp. 9-30-17
STATE OF CALIFORNIA

INFORMATION ON ACTUAL FOUNDATION CONDITIONS ENCOUNTERED IS ON FILE IN BRIDGE GEOLOGY SECTION

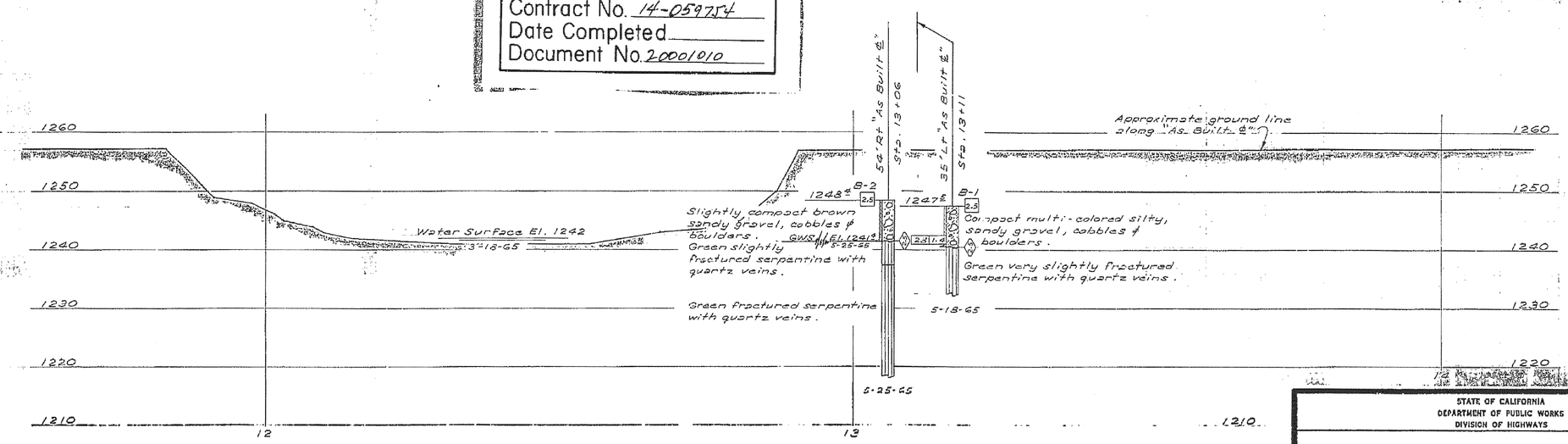

STATE OF CALIFORNIA
DEPARTMENT OF PUBLIC WORKS
DIVISION OF HIGHWAYS

THOMPSON CREEK BRIDGE

LOG OF TEST BORINGS

SCALE 1" = 10'	BRIDGE 2-68	FILE	DRAWING 0268-5

02205
059741

Disregard prints bearing earlier numbers → PREL. DRAWING No. PR-

20

472

DATE PLOTTED => 23-AUG-2016
TIME PLOTTED => 06:19

USERNAME => s115152
DGN FILE => 02-0068-z-ltb02.dgn

P:\proj1\02\4E650_plans\pse\Structures\02-0068-z-ltb02.dgn

DIST	COUNTY	ROUTE	POST MILES TOTAL PROJECT	SHEET No.	TOTAL SHEETS
02	Sis	96	R52.5/88.4	143	208

Mufeed Khalaf 5/27/16
REGISTERED CIVIL ENGINEER DATE

06-15-16
PLANS APPROVAL DATE

REGISTERED PROFESSIONAL ENGINEER Mufeed Khalaf No. 54260 Exp. 12-31-17 CIVIL STATE OF CALIFORNIA

The State of California or its officers or agents shall not be responsible for the accuracy or completeness of scanned copies of this plan sheet.

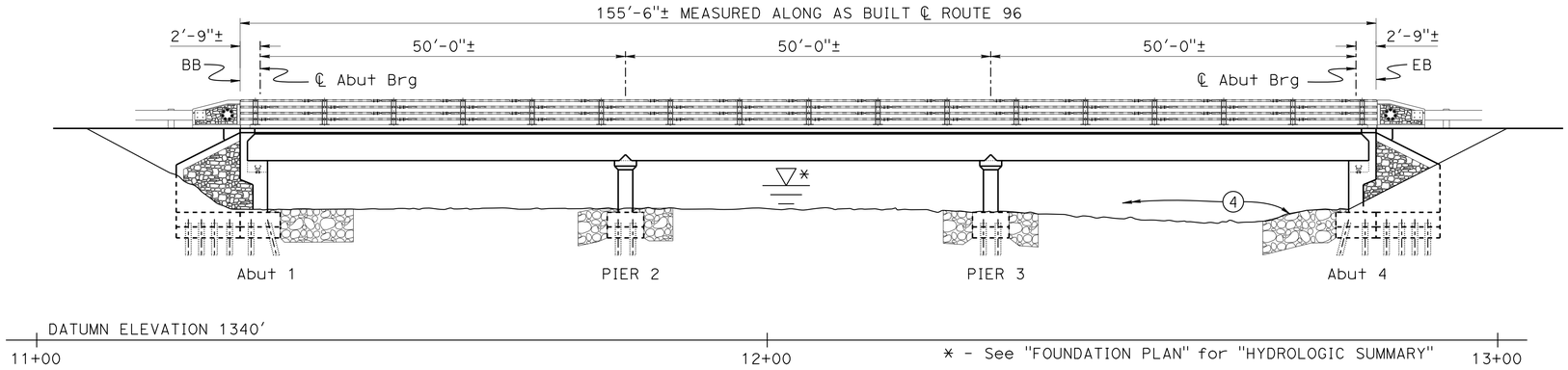

ELEVATION
1" = 10'

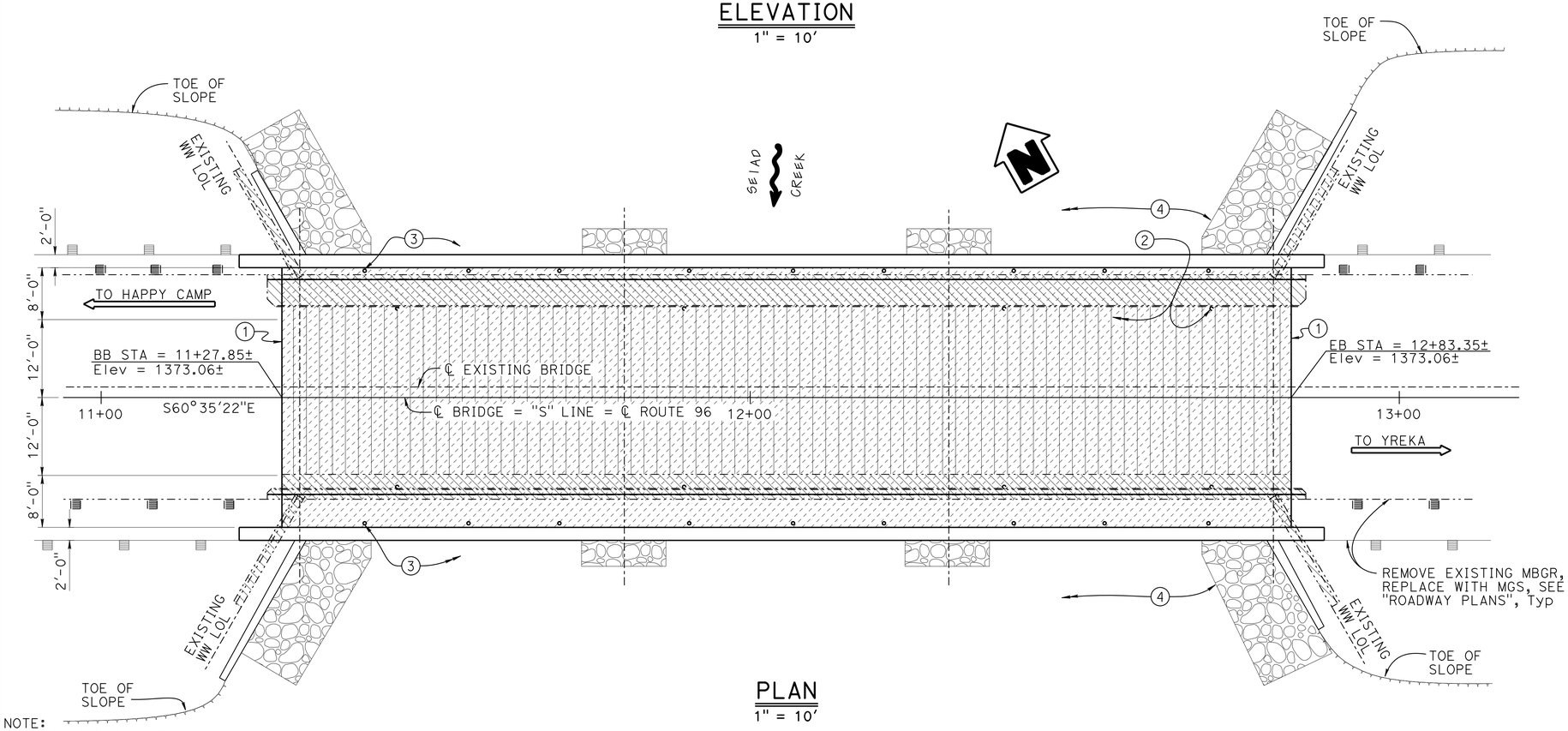

PLAN
1" = 10'

NOTE:
THE CONTRACTOR MUST VERIFY ALL CONTROLLING FIELD DIMENSIONS BEFORE ORDERING OR FABRICATING ANY MATERIAL.

LEGEND:

- Indicates bridge removal (portion), location B
- Indicates limits of remove existing 4± AC overlay, remove unsound concrete, and place rapid setting concrete patches
- Indicates limits of prepare concrete bridge deck surface and place 1" Min polyester concrete overlay
- Indicates new construction
- Indicates existing bridge

NOTES:

1. Clean throughout depth of expansion joint and install new joint seals
2. Plug existing deck drains
3. Deck Drains
4. RSP / Rip Rap, See "ROADWAY PLANS"

NOTES:

1. For location of Bridge Name "SEIAD CREEK BRIDGE" & Bridge Number "NO. 02-0072" see "ROADWAY PLANS"
2. For "TYPICAL SECTION" and "QUANTITIES" see "GENERAL PLAN NO. 2" sheet

Joseph E Downing
DESIGN ENGINEER

	BY	CHECKED			
DESIGN	Quang Nguyen	Eric Burgeson	LOAD FACTOR DESIGN	LIVE LOADING: HS20-44	
DETAILS	Jay Reid	Eric Burgeson	LAYOUT	Quang Nguyen	Mufeed Khalaf
QUANTITIES	Mufeed Khalaf	Shadi Motalebi	SPECIFICATIONS	Elaheh Mansoubi	PLANS AND SPECS COMPARED: Elaheh Mansoubi

ORIGINAL SCALE IN INCHES FOR REDUCED PLANS 0 1 2 3

STATE OF CALIFORNIA
DEPARTMENT OF TRANSPORTATION

DIVISION OF ENGINEERING SERVICES
STRUCTURE DESIGN
DESIGN BRANCH 3

BRIDGE NO. 02-0072
POST MILE 60.17

SEIAD CREEK BRIDGE (WIDEN)
GENERAL PLAN NO. 1

UNIT: 3578
PROJECT NUMBER & PHASE: 02120000121
CONTRACT NO.: 02-4E6504

DISREGARD PRINTS BEARING EARLIER REVISION DATES

REVISION DATES: ~~5-2-14~~ 5-23-16 ~~6-23-16~~

SHEET 1 OF 32

USERNAME => s115152 DATE PLOTTED => 23-AUG-2016 TIME PLOTTED => 06:20

STRUCTURES DESIGN GENERAL PLAN SHEET (ENGLISH) (REV.09-01-10)

FILE => 02-0072-a-gp01.dgn

DIST	COUNTY	ROUTE	POST MILES TOTAL PROJECT	SHEET No.	TOTAL SHEETS
02	Sis	96	R52.5/88.4	144	208

Mufeed Khalaf 5/27/16
REGISTERED CIVIL ENGINEER DATE

06-15-16
PLANS APPROVAL DATE

REGISTERED PROFESSIONAL ENGINEER Mufeed Khalaf No. 54260 Exp. 12-31-17 CIVIL STATE OF CALIFORNIA

The State of California or its officers or agents shall not be responsible for the accuracy or completeness of scanned copies of this plan sheet.

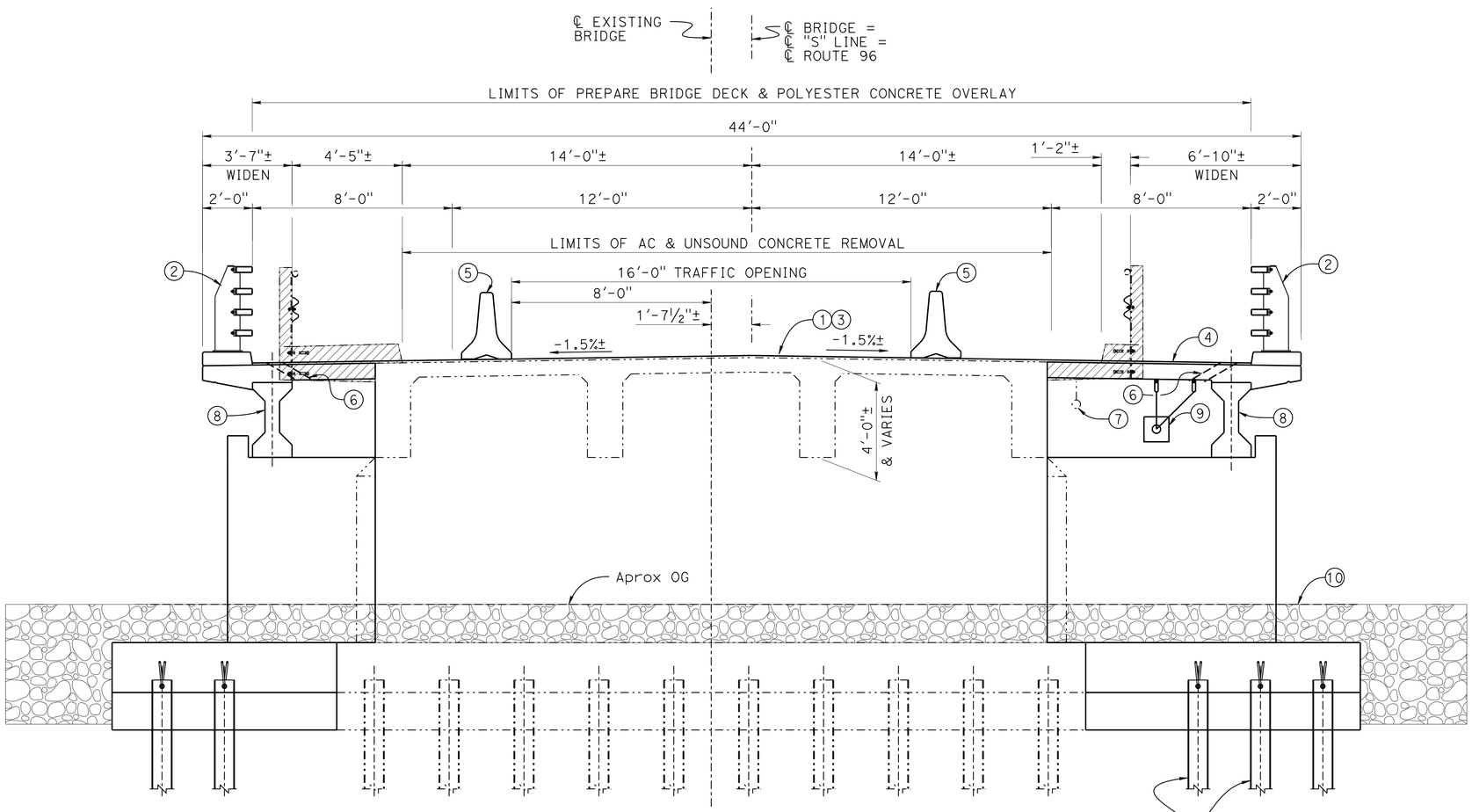

TYPICAL SECTION

⅜" = 1'-0"

LEGEND:

- Indicates bridge removal (portion), location B
- Indicates new construction
- Indicates existing bridge

NOTES:

1. Remove existing 4"± AC surfacing & membrane (Proctecto Wrap)
2. California ST-70 Bridge Rail (Mod) w/Surface Texture. For Stain Galvanized Surfaces, see "ROADWAY PLANS"
3. Furnish and place 1" polyester concrete overlay. Remove unsound concrete and patch with rapid setting concrete prior to bridge deck treatment.
4. 1" polyester concrete overlay
5. Temporary Rail (TYPE K) see "ROADWAY PLANS"
6. Deck Drains
7. Relocate 4"± galvanized steel pipe, fiber optic line by AT&T
8. PC/PS I Girders
9. Utility Opening
10. RSP / Rip Rap, See "ROADWAY PLANS"

QUANTITIES

PUBLIC SAFETY PLAN	LUMP	SUM
RAPID SETTING CONCRETE (PATCH)	53	CF
REMOVE ASPHALT CONCRETE SURFACING	4,354	SQFT
REMOVE UNSOUND CONCRETE	53	CF
PREPARE CONCRETE BRIDGE DECK SURFACE	6,220	SQFT
FURNISH POLYESTER CONCRETE OVERLAY	519	CF
PLACE POLYESTER CONCRETE OVERLAY	6,220	SQFT
PLUG DECK DRAIN	8	EA
BRIDGE REMOVAL (PORTION), LOCATION B	LUMP	SUM
STRUCTURE EXCAVATION (TYPE A)	366	CY
STRUCTURE BACKFILL (BRIDGE)	269	CY
FURNISH STEEL PILING (HP 10 X 57)	1,022	LF
DRIVE STEEL PILE (HP 10 X 57)	50	EA
SEAL COURSE CONCRETE	60	CY
STRUCTURAL CONCRETE, BRIDGE FOOTING	81	CY
STRUCTURAL CONCRETE, BRIDGE	121	CY
STRUCTURAL CONCRETE, BRIDGE (POLYMER FIBER)	66	CY

QUANTITIES Cont:

CONCRETE SURFACE TEXTURE (RANDOM ROUGH STACKED ROCK)	404	SQFT
DRILL AND BOND DOWEL	150	LF
CLEAN EXPANSION JOINT	68	LF
FURNISH PRECAST PRESTRESSED CONCRETE GIRDER (40'-50')	6	EA
ERECT PRECAST PRESTRESSED CONCRETE GIRDER	6	EA
JOINT SEAL (MR 1 1/2")	84	LF
BAR REINFORCING STEEL (BRIDGE)	31,989	LB
BAR REINFORCING STEEL (EPOXY COATED) (BRIDGE)	19,568	LB
PREPARE AND STAIN CONCRETE	585	SQFT
BRIDGE DECK DRAINAGE SYSTEM	901	LB
CALIFORNIA ST-70 BRIDGE RAIL (MODIFIED)	337	LF

NOTE:
THE CONTRACTOR MUST VERIFY ALL CONTROLLING FIELD DIMENSIONS BEFORE ORDERING OR FABRICATING ANY MATERIAL.

Joseph E Downing
DESIGN ENGINEER

	BY	CHECKED
DESIGN	Quang Nguyen	Eric Burgeson
DETAILS	Jay Reid	Eric Burgeson
QUANTITIES	Mufeed Khalaf	Shadi Motalebi

LOAD FACTOR DESIGN — LIVE LOADING: HS20-44

	BY	CHECKED
LAYOUT	Quang Nguyen	Mufeed Khalaf
SPECIFICATIONS	Elaheh Mansoubi	PLANS AND SPECS COMPARED: Elaheh Mansoubi

ORIGINAL SCALE IN INCHES FOR REDUCED PLANS 0 1 2 3

STATE OF CALIFORNIA
DEPARTMENT OF TRANSPORTATION

DIVISION OF ENGINEERING SERVICES
STRUCTURE DESIGN
DESIGN BRANCH 3

BRIDGE NO. 02-0072
POST MILE 60.17

SEIAD CREEK BRIDGE (WIDEN)
GENERAL PLAN NO. 2

UNIT: 3578
PROJECT NUMBER & PHASE: 02120000121
CONTRACT NO.: 02-4E6504

DISREGARD PRINTS BEARING EARLIER REVISION DATES
REVISION DATES: 4-3-14 5-23-16 6-28-16

SHEET 2 OF 32

STRUCTURES DESIGN GENERAL PLAN SHEET (ENGLISH) (REV.09-01-10)

FILE => 02-0072-a-gp02.dgn

USERNAME => s115152 DATE PLOTTED => 23-AUG-2016 TIME PLOTTED => 06:20

DIST	COUNTY	ROUTE	POST MILES TOTAL PROJECT	SHEET No.	TOTAL SHEETS
02	Sis	96	R52.5/88.4	145	208

Mufeed Khalaf 5/27/16
REGISTERED CIVIL ENGINEER DATE

06-15-16
PLANS APPROVAL DATE

REGISTERED PROFESSIONAL ENGINEER Mufeed Khalaf No. 54260 Exp. 12-31-17 CIVIL STATE OF CALIFORNIA

The State of California or its officers or agents shall not be responsible for the accuracy or completeness of scanned copies of this plan sheet.

GENERAL NOTES

EXISTING STRUCTURE

SPECIFICATIONS:
DESIGN:

AASHTO dated 1949 with revisions, and as Supplemented by Bridge Department Dated 1949

CONSTRUCTION:

Standard Specifications, Division of Highways, dated August 1949 and the Special Provisions

LIVE LOADING:

H20-S16-44

UNIT STRESSES:

Reinforced Concrete:

f's = 20 ksi
f'c = 1.0 ksi
n = 10

PILE LOADING:

37 TONS TYPE: STEEL - 10 BP42

NEW CONSTRUCTION

SPECIFICATIONS:
DESIGN:

Bridge Design Specifications-April 2000 (LFD)(1996 AASHTO with interim and revisions by CALTRANS)

DEAD LOAD:

Includes 9 psf of polyester concrete overlay, No future additional deck overlay allowed

LIVE LOADING:

HS20-44 design load

SEISMIC DESIGN:

See "SITE SPECIFIC ARS CURVE"

REINFORCED CONCRETE:

f's = 60 ksi
f'c = 4 ksi
n = 9

PILE LOADING:

45 TONS HP 10x57

PRESTRESS CONCRETE

SEE "PC/PS I GIRDER" SHEET

PILE DATA TABLE

LOCATION	PILE TYPE	DESIGN LOADING	NOMINAL RESISTANCE (kips)		DESIGN TIP ELEV. (FT)	SPECIFIED TIP ELEV. (FT)	NOMINAL DRIVING RESISTANCE (kips)
			COMPRESSION	TENSION			
ABUTMENT 1	HP 10x57	90 KIPS	180	--	1341(a)	1341	180
PIER 2	HP 10x57	--	180	--	1341(a)	1341	180
PIER 3	HP 10x57	--	180	--	1341(a)	1341	180
ABUTMENT 4	HP 10x57	90 KIPS	180	--	1341(a)	1341	180
ABUTMENT 1 WINGWALL	HP 10x57	90 KIPS	180	--	1341(a)	1341	180
ABUTMENT 4 WINGWALL	HP 10x57	90 KIPS	180	--	1341(a)	1341	180

NOTE:

Specified tip elevations for Abutments, Piers and Retaining Walls are controlled by (a) Compression

LEGEND

- STRUCTURAL CONCRETE, BRIDGE
- STRUCTURAL CONCRETE, BRIDGE FOOTING
- PC/PS I GIRDER, SEE "PRECAST PRESTRESSED I GIRDER" SHEET
- STRUCTURAL CONCRETE, BRIDGE (POLYMER FIBER) (5.0 KSI @ 28 DAYS)
- CONCRETE SEAL COURSE

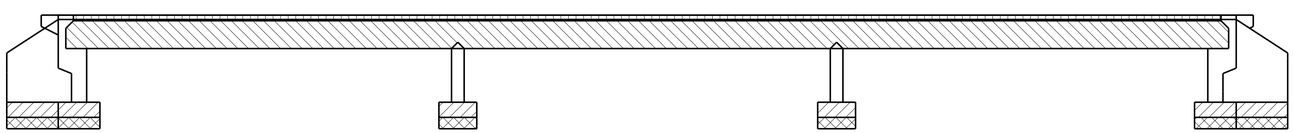

CONCRETE STRENGTH AND TYPE LIMITS

1" = 10'

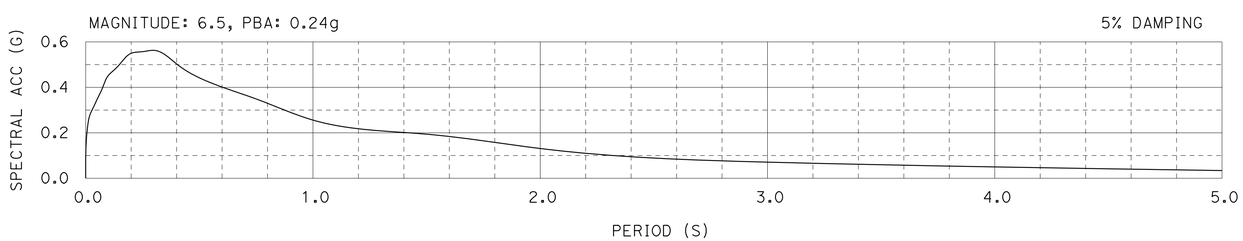

SITE SPECIFIC ARS CURVE

3" = 1'-0"

NOTE:
THE CONTRACTOR MUST VERIFY ALL CONTROLLING FIELD DIMENSIONS BEFORE ORDERING OR FABRICATING ANY MATERIAL.

INDEX TO PLANS

SHEET NO.	TITLE
1	GENERAL PLAN NO. 1
2	GENERAL PLAN NO. 2
3	INDEX TO PLANS NO. 1
4	INDEX TO PLANS NO. 2
5	FOUNDATION PLAN
6	ABUTMENT LAYOUT NO. 1
7	ABUTMENT LAYOUT NO. 2
8	ABUTMENT DETAILS NO. 1
9	ABUTMENT DETAILS NO. 2
10	ABUTMENT DETAILS NO. 3
11	ABUTMENT DETAILS NO. 4
12	PIER LAYOUT
13	PIER DETAILS NO. 1
14	PIER DETAILS NO. 2
15	TYPICAL SECTION NO. 1
16	TYPICAL SECTION NO. 2
17	GIRDER LAYOUT
18	BRIDGE REMOVAL (PORTION) NO. 1
19	BRIDGE REMOVAL (PORTION) NO. 2
20	CONCRETE SURFACE TEXTURE Det No. 1
21	CONCRETE SURFACE TEXTURE Det No. 2
22	CONCRETE SURFACE TEXTURE Det No. 3
23	CONCRETE SURFACE TEXTURE Det No. 4
24	PRECAST PRESTRESSED I GIRDER
25	CALIFORNIA ST-70 BRIDGE RAIL DETAILS No. 1
26	CALIFORNIA ST-70 BRIDGE RAIL DETAILS No. 2
27	CALIFORNIA ST-70 BRIDGE RAIL DETAILS No. 3
28	CALIFORNIA ST-70 BRIDGE RAIL DETAILS No. 4
29	BARRIER END BLOCK DETAILS
30	LOG OF TEST BORINGS 1 OF 3
31	LOG OF TEST BORINGS 2 OF 3
32	LOG OF TEST BORINGS 3 OF 3

STANDARD PLANS DATED 2010

A10A	ABBREVIATIONS (SHEET 1 OF 2)
RSP A10B	ABBREVIATIONS (SHEET 2 OF 2)
A10C	LINES AND SYMBOLS (SHEET 1 OF 3)
A10D	LINES AND SYMBOLS (SHEET 2 OF 3)
A10E	LINES AND SYMBOLS (SHEET 3 OF 3)
RSP A10F	LEGEND-SOIL (SHEET 1 OF 2)
RSP A10G	LEGEND-SOIL (SHEET 2 OF 2)
A10H	LEGEND - ROCK
RSP A77U1	MIDWEST GUARDRAIL SYSTEM CONNECTION To BRIDGE RAILINGS WITHOUT SIDEWALKS DETAILS NO. 1
RSP A77U2	MIDWEST GUARDRAIL SYSTEM CONNECTION To BRIDGE RAILINGS WITHOUT SIDEWALKS DETAILS NO. 2
A78F1	DOUBLE THRIE BEAM BARRIER CONNECTION TO BRIDGE RAILINGS WITHOUT SIDEWALKS
A78F2	DOUBLE THRIE BEAM BARRIER CONNECTION TO BRIDGE RAILINGS WITHOUT SIDEWALKS
B0-1	BRIDGE DETAILS
B0-3	BRIDGE DETAILS
B0-5	BRIDGE DETAILS
B0-13	BRIDGE DETAILS
B6-10	UTILITY OPENINGS T-BEAM
RSP B6-21	JOINT SEALS (MAXIMUM MOVEMENT RATING = 2")
B7-1	BOX GIRDER DETAILS
RSP B8-5	CAST -IN-PLACE PRESTRESSED GIRDER DETAILS

STANDARD PLAN SHEET NO.
DETAIL NO.

	BY	CHECKED
DESIGN	Quang Nguyen	Eric Burgeson
DETAILS	Jay Reid	Eric Burgeson
QUANTITIES	Mufeed Khalaf	Shadi Motalebi

STATE OF CALIFORNIA
DEPARTMENT OF TRANSPORTATION

DIVISION OF ENGINEERING SERVICES
STRUCTURE DESIGN
DESIGN BRANCH 3

BRIDGE NO. 02-0072
POST MILE 60.17

SEIAD CREEK BRIDGE (WIDEN)
INDEX TO PLANS NO. 1

STRUCTURES DESIGN DETAIL SHEET (ENGLISH) (REV. 09-01-10)

ORIGINAL SCALE IN INCHES FOR REDUCED PLANS 0 1 2 3

UNIT: 3578
PROJECT NUMBER & PHASE: 02120000121
CONTRACT NO.: 02-4E6504

DISREGARD PRINTS BEARING EARLIER REVISION DATES

REVISION DATES: 2-14-15 4-17-15 6-18-15 5-23-16

SHEET 3 OF 32

FILE => 02-0072-a-itp01.dgn

USERNAME => s115152 DATE PLOTTED => 23-AUG-2016 TIME PLOTTED => 06:20

DIST	COUNTY	ROUTE	POST MILES TOTAL PROJECT	SHEET No.	TOTAL SHEETS
02	Sis	96	R52.5/88.4	146	208

Mufeed Khalaf 5/27/16
REGISTERED CIVIL ENGINEER DATE

06-15-16
PLANS APPROVAL DATE

REGISTERED PROFESSIONAL ENGINEER
Mufeed Khalaf
No. 54260
Exp. 12-31-17
CIVIL
STATE OF CALIFORNIA

The State of California or its officers or agents shall not be responsible for the accuracy or completeness of scanned copies of this plan sheet.

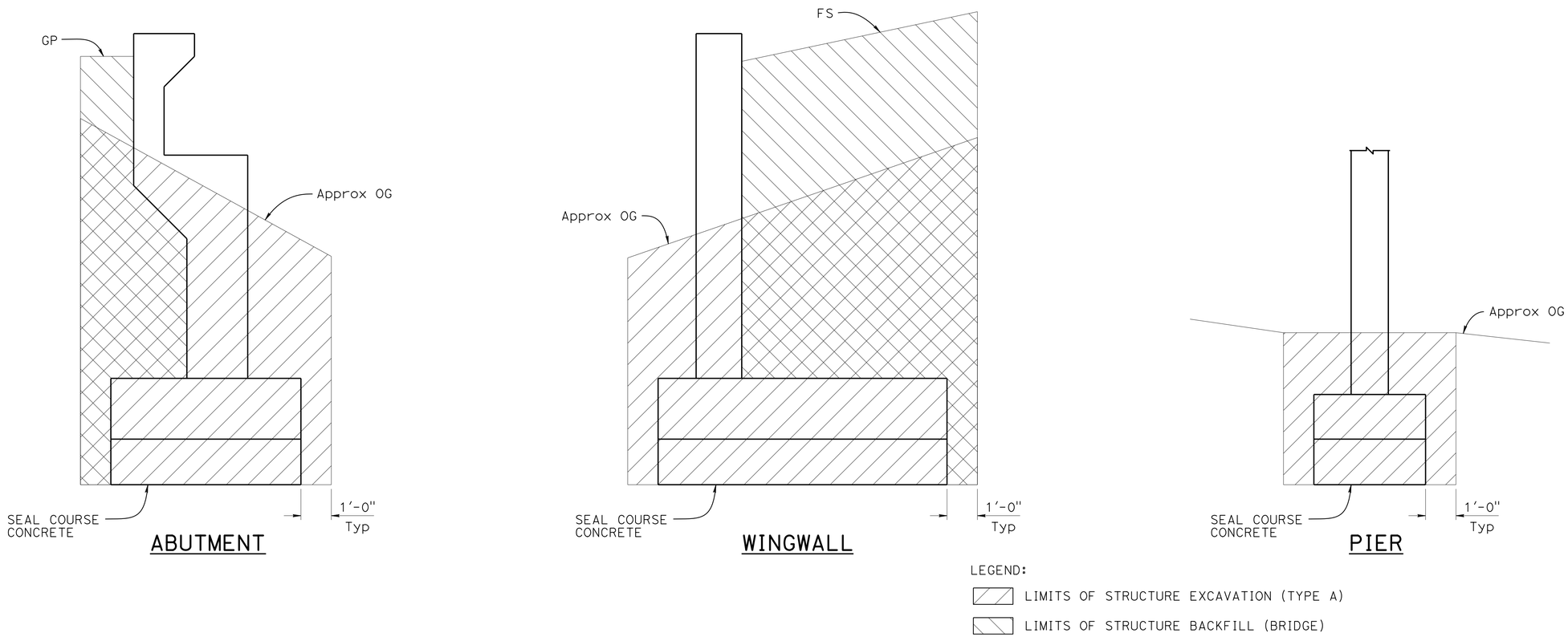

LIMITS OF EXCAVATION & BACKFILL

NO SCALE

NOTE:
THE CONTRACTOR MUST VERIFY ALL CONTROLLING FIELD DIMENSIONS BEFORE ORDERING OR FABRICATING ANY MATERIAL.

	BY	CHECKED
DESIGN	Quang Nguyen	Eric Burgeson
DETAILS	Jay Reid	Eric Burgeson
QUANTITIES	Mufeed Khalaf	Shadi Motalebi

STATE OF CALIFORNIA
DEPARTMENT OF TRANSPORTATION

DIVISION OF ENGINEERING SERVICES
STRUCTURE DESIGN
DESIGN BRANCH 3

BRIDGE NO. 02-0072
POST MILE 60.17

SEIAD CREEK BRIDGE (WIDEN)
INDEX TO PLANS NO. 2

STRUCTURES DESIGN DETAIL SHEET (ENGLISH) (REV. 09-01-10)

ORIGINAL SCALE IN INCHES FOR REDUCED PLANS 0 1 2 3

UNIT: 3578
PROJECT NUMBER & PHASE: 02120000121
CONTRACT NO.: 02-4E6504

DISREGARD PRINTS BEARING EARLIER REVISION DATES

REVISION DATES: 2-18-15 4-17-15 6-16-15 5-23-16

SHEET 4 OF 32

FILE => 02-0072-a-itp02.dgn

USERNAME => s113152 DATE PLOTTED => 23-AUG-2016 TIME PLOTTED => 06:20

DIST	COUNTY	ROUTE	POST MILES TOTAL PROJECT	SHEET No.	TOTAL SHEETS
02	Sis	96	R52.5/88.4	147	208

Mufeed Khalaf 5/27/16
REGISTERED CIVIL ENGINEER DATE

06-15-16
PLANS APPROVAL DATE

REGISTERED PROFESSIONAL ENGINEER Mufeed Khalaf No. 54260 Exp. 12-31-17 CIVIL STATE OF CALIFORNIA

The State of California or its officers or agents shall not be responsible for the accuracy or completeness of electronic copies of this plan sheet.

SCOUR DATA TABLE

SUPPORT NO.	LONG TERM (DEGRADATION & CONTRACTION) SCOUR ELEVATION (ft)	SHORT TERM (LOCAL) SCOUR DEPTH (ft)
ABUTMENT 1	N/A	6.0
PIER 2	N/A	9.4
PIER 3	N/A	9.8
ABUTMENT 4	N/A	6.0

NOTE:
FOR PILE & FOOTING INFORMATION SEE "INDEX TO PLANS", "ABUTMENT LAYOUT NO. 1", "ABUTMENT LAYOUT NO. 2", "BENT LAYOUT" & "BENT DETAILS NO. 1" SHEETS

NOTE:
THE CONTRACTOR SHALL VERIFY ALL CONTROLLING FIELD DIMENSIONS BEFORE ORDERING OR FABRICATING ANY MATERIAL.

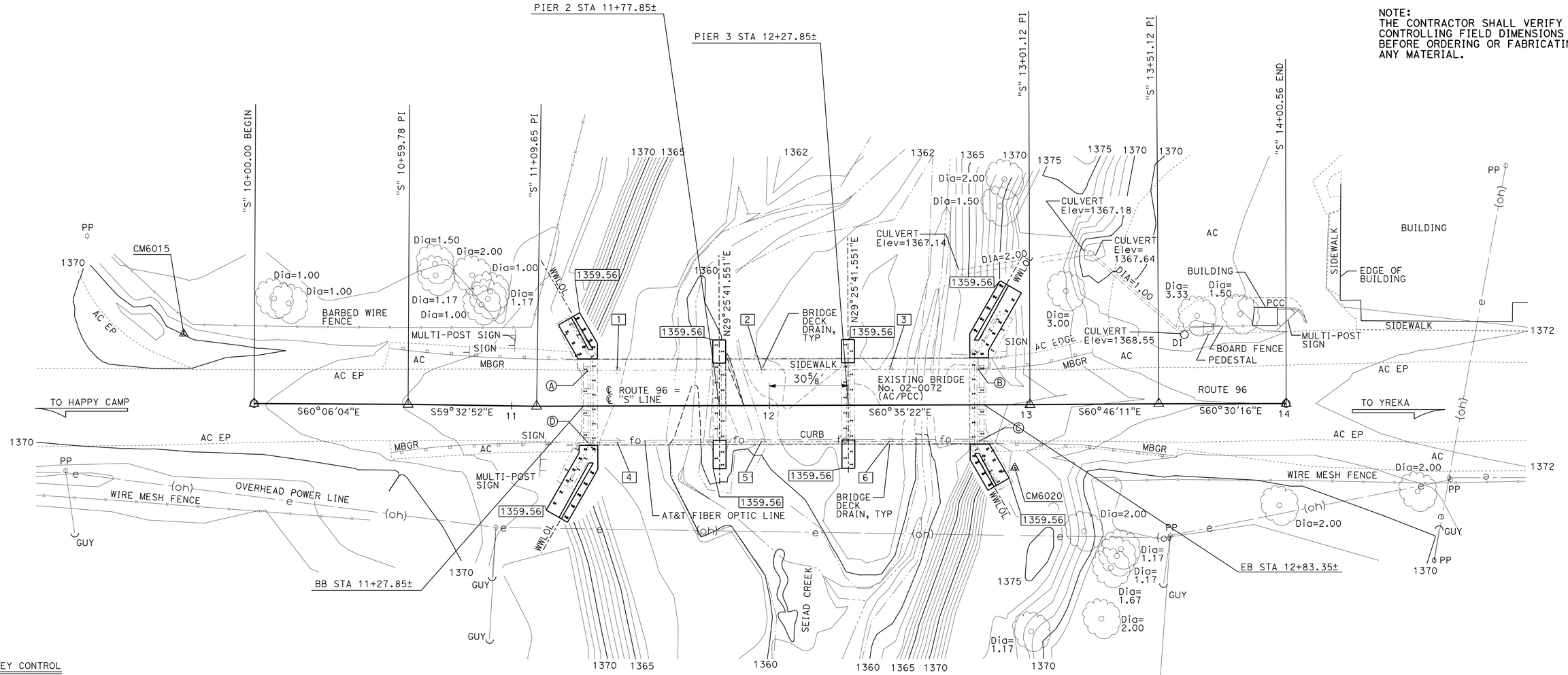

SURVEY CONTROL

CM6015
Fnd Brass Disk in Conc
38.51' S15°32'52"E Sta 10+00.00
"S" LINE, Rte 96
N 2,556,897.36
E 6,235,260.67
Elev = 1369.98

CM6020
Fnd ¾" Rebar W/ Alum Cap
24.49' Rt "S" LINE, Rte 96
Sta 12+95.15
N 2,556,692.75
E 6,235,515.38
Elev. = 1372.95

INDICATES BOTTOM OF FOOTING ELEVATION

Bridge Location #02-0072
Ⓐ - 13.85 Lt. ℄ "S" LINE, Sta.11+29.67, Elev.=1372.80± (AC)
Ⓑ - 13.97 Lt. ℄ "S" LINE, Sta.12+80.96, Elev.=1372.75± (AC)
Ⓒ - 14.17 Rt. ℄ "S" LINE, Sta.12+81.11, Elev.=1372.79± (AC)
Ⓓ - 14.18 Rt. ℄ "S" LINE, Sta.11+29.58, Elev.=1372.81± (AC)

DECK ELEVATIONS

1 - 1372.45
2 - 1372.45
3 - 1372.46
4 - 1372.36
5 - 1372.42
6 - 1372.35

HYDROLOGIC SUMMARY

DRAINAGE AREA: 27.0 SQUARE MILES

	MAX DAILY RELEASE	ALLOWED BASE FLOOD	ORDINARY HIGHWATER ESTIMATE
FREQUENCY (YEARS)	50	100	N/A
EXISTING WATER SURFACE ELEV. (FEET)	1376.03	1376.10	N/A
DISCHARGE (CUBIC FEET PER SECOND)	6155	7513	N/A

FLOOD PLAIN DATA ARE BASED UPON INFORMATION AVAILABLE WHEN THE PLANS WERE PREPARED AND ARE SHOWN TO MEET FEDERAL REQUIREMENTS. THE ACCURACY OF SAID INFORMATION IS NOT WARRANTED BY THE STATE AND INTERESTED OR AFFECTED PARTIES SHOULD MAKE THEIR OWN INVESTIGATIONS.

PRELIMINARY INVESTIGATION SECTION

SCALE	VERT.DATUM NAVD88	PHOTOGRAMMETRY AS OF: X			
1"=20'	HORZ.DATUM NAD83	SURVEYED	BY DISTRICT	CHECKED	BY J. BORDEN 5/2014
ALIGNMENT TIES Dist TRAVERSE SHEET		DRAFTED	BY L. YOUNG 5/2014	CHECKED	BY S. SOU 5/2014

DESIGN	BY Quang Nguyen	CHECKED Eric Burgeson
DETAILS	BY Jay Reid	CHECKED Eric Burgeson
QUANTITIES	BY Mufeed Khalaf	CHECKED Shadi Motalebi

STATE OF CALIFORNIA
DEPARTMENT OF TRANSPORTATION

DIVISION OF ENGINEERING SERVICES
STRUCTURE DESIGN
DESIGN BRANCH 3

BRIDGE NO. 02-0072
POST MILE 60.17

SEIAD CREEK BRIDGE (WIDEN)
FOUNDATION PLAN

STRUCTURES FOUNDATION PLAN SHEET (ENGLISH) (REV. 09-01-10)

ORIGINAL SCALE IN INCHES FOR REDUCED PLANS 0 1 2 3

UNIT: 3646
PROJECT NUMBER & PHASE: 02120000121
CONTRACT NO.: 02-4E6504

DISREGARD PRINTS BEARING EARLIER REVISION DATES

REVISION DATES 5-29-14 5-28-14 2-14-15 3-14-16

SHEET 5 OF 32

FILE => 02-0072-e-fdp101.dgn

USERNAME => s115152 DATE PLOTTED => 23-AUG-2016 TIME PLOTTED => 06:20

DIST	COUNTY	ROUTE	POST MILES TOTAL PROJECT	SHEET No.	TOTAL SHEETS
02	Sis	96	R52.5/88.4	148	208

Mufeed Khalaf 5/27/16
REGISTERED CIVIL ENGINEER DATE

06-15-16
PLANS APPROVAL DATE

REGISTERED PROFESSIONAL ENGINEER Mufeed Khalaf No. 54260 Exp. 12-31-17 CIVIL STATE OF CALIFORNIA

The State of California or its officers or agents shall not be responsible for the accuracy or completeness of scanned copies of this plan sheet.

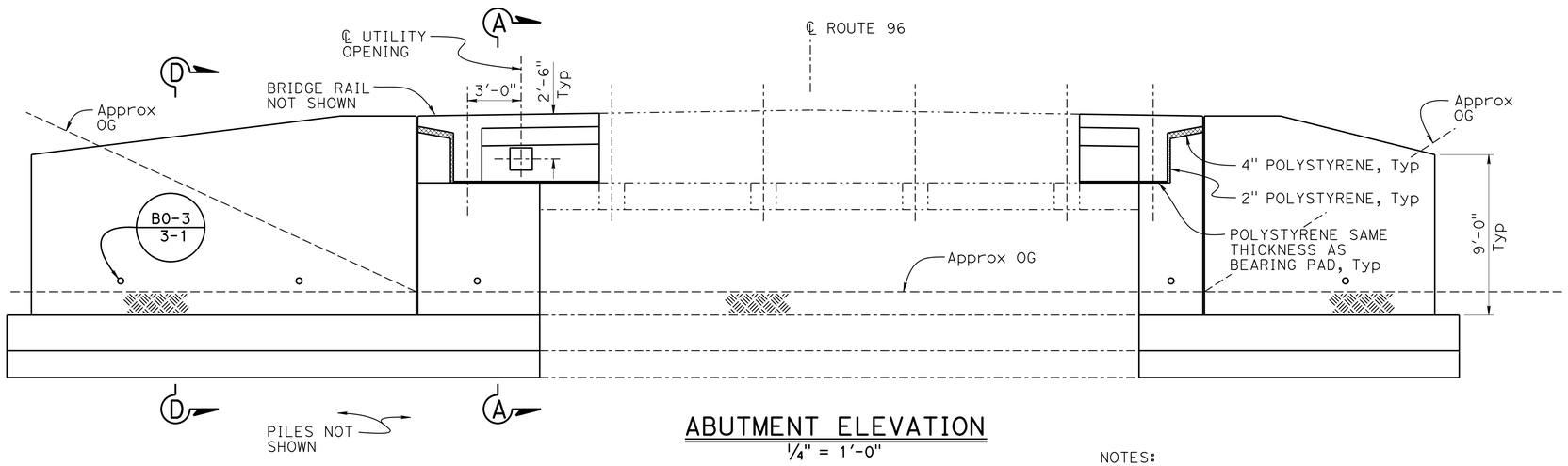

ABUTMENT ELEVATION

1/4" = 1'-0"

NOTES:

1. FOR "SECTION A-A" SEE "ABUTMENT DETAILS NO. 1" SHEET
2. FOR "SECTION D-D" SEE "ABUTMENT DETAILS NO. 4" SHEET
3. CONCRETE SURFACE TEXTURE NOT SHOWN SEE, "CONCRETE SURFACE TEXTURE Det No. 1", "CONCRETE SURFACE TEXTURE Det No. 2", & "CONCRETE SURFACE TEXTURE Det No. 3", SHEETS FOR DETAILS
4. ABUTMENT 1 SHOWN ABUTMENT 4 SIMILAR BY OPPOSITE HAND

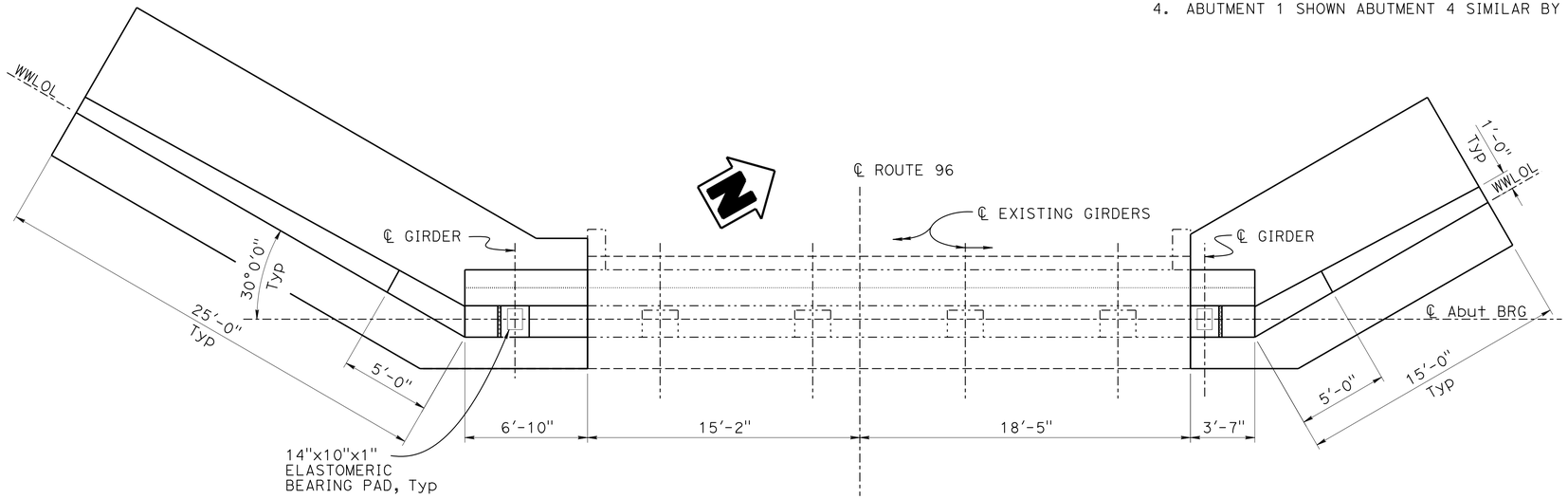

ABUTMENT PLAN

1/4" = 1'-0"

NOTE:
THE CONTRACTOR MUST VERIFY ALL CONTROLLING FIELD DIMENSIONS BEFORE ORDERING OR FABRICATING ANY MATERIAL.

	BY	CHECKED
DESIGN	Quang Nguyen	Eric Burgeson
DETAILS	Jay Reid	Eric Burgeson
QUANTITIES	Mufeed Khalaf	Shadi Motalebi

STATE OF CALIFORNIA
DEPARTMENT OF TRANSPORTATION

DIVISION OF ENGINEERING SERVICES
STRUCTURE DESIGN
DESIGN BRANCH 3

BRIDGE NO. 02-0072
POST MILE 60.17

SEIAD CREEK BRIDGE (WIDEN)
ABUTMENT LAYOUT NO. 1

STRUCTURES DESIGN DETAIL SHEET (ENGLISH) (REV. 09-01-10)

ORIGINAL SCALE IN INCHES FOR REDUCED PLANS 0 1 2 3

UNIT: 3578
PROJECT NUMBER & PHASE: 02120000121
CONTRACT NO.: 02-4E6504

DISREGARD PRINTS BEARING EARLIER REVISION DATES

REVISION DATES: ~~2-13-15~~ ~~4-13-15~~ ~~6-16-15~~ 5-23-16

SHEET 6 OF 32

FILE => 02-0072-f-a01_to01.dgn

USERNAME => s115152 DATE PLOTTED => 23-AUG-2016 TIME PLOTTED => 08:20

DIST	COUNTY	ROUTE	POST MILES TOTAL PROJECT	SHEET No.	TOTAL SHEETS
02	Sis	96	R52.5/88.4	149	208

Mufeed Khalaf 5/27/16
REGISTERED CIVIL ENGINEER DATE

06-15-16
PLANS APPROVAL DATE

REGISTERED PROFESSIONAL ENGINEER
Mufeed Khalaf
No. 54260
Exp. 12-31-17
CIVIL
STATE OF CALIFORNIA

The State of California or its officers or agents shall not be responsible for the accuracy or completeness of scanned copies of this plan sheet.

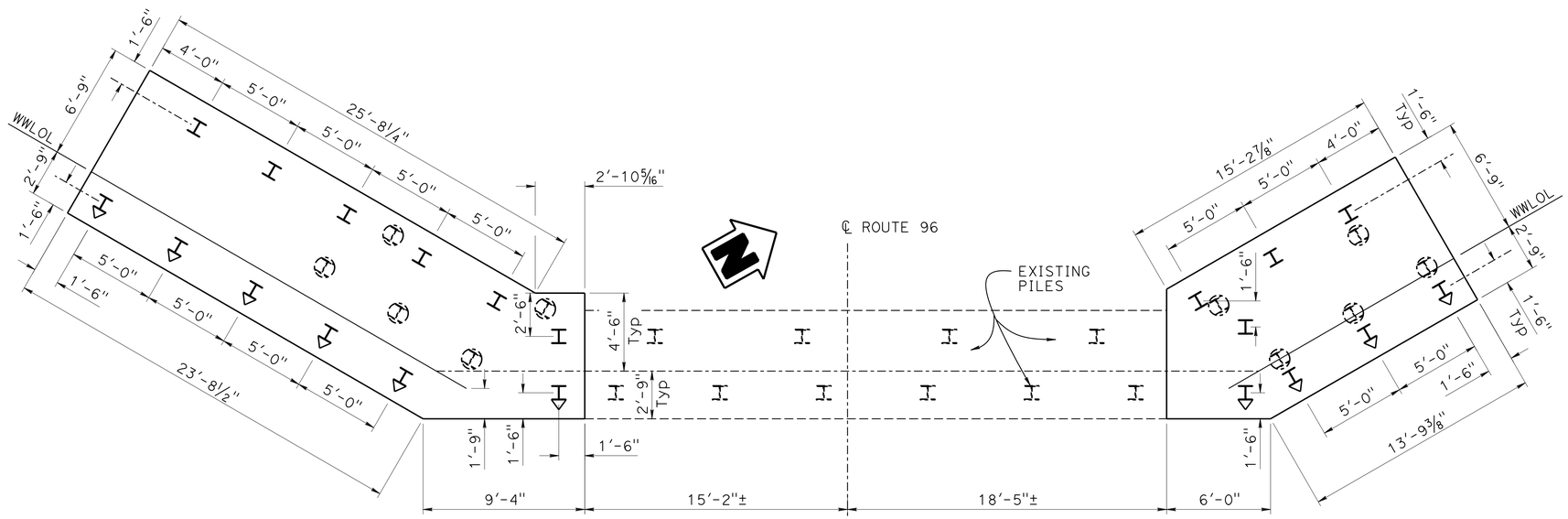

NOTE:

ABUTMENT 1 SHOWN ABUTMENT 4 SIMILAR BY OPPOSITE HAND

LEGEND:

- INDICATES EXISTING PILE
- INDICATES EXISTING PILE TO BE REMOVED
- INDICATES NEW PILE
- INDICATES NEW 3:1 BATTERED PILE

ABUTMENT PILE LAYOUT

1/4" = 1'-0"

NOTE:
THE CONTRACTOR MUST VERIFY ALL CONTROLLING FIELD DIMENSIONS BEFORE ORDERING OR FABRICATING ANY MATERIAL.

	BY	CHECKED
DESIGN	Quang Nguyen	Eric Burgeson
DETAILS	Jay Reid	Eric Burgeson
QUANTITIES	Mufeed Khalaf	Shadi Motalebi

STATE OF CALIFORNIA
DEPARTMENT OF TRANSPORTATION

DIVISION OF ENGINEERING SERVICES
STRUCTURE DESIGN
DESIGN BRANCH 3

BRIDGE NO. 02-0072
POST MILE 60.17

SEIAD CREEK BRIDGE (WIDEN)
ABUTMENT LAYOUT NO. 2

STRUCTURES DESIGN DETAIL SHEET (ENGLISH) (REV. 09-01-10)

ORIGINAL SCALE IN INCHES FOR REDUCED PLANS 0 1 2 3

UNIT: 3578
PROJECT NUMBER & PHASE: 02120000121
CONTRACT NO.: 02-4E6504

DISREGARD PRINTS BEARING EARLIER REVISION DATES

REVISION DATES: 2-13-15 4-17-15 6-18-15 5-23-16

SHEET 7 OF 32

FILE => 02-0072-f-a01_lo02.dgn

USERNAME => s115152 DATE PLOTTED => 23-AUG-2016 TIME PLOTTED => 06:20

DIST	COUNTY	ROUTE	POST MILES TOTAL PROJECT	SHEET No.	TOTAL SHEETS
02	Sis	96	R52.5/88.4	150	208

Mufeed Khalaf 5/27/16
REGISTERED CIVIL ENGINEER DATE

06-15-16
PLANS APPROVAL DATE

REGISTERED PROFESSIONAL ENGINEER Mufeed Khalaf No. 54260 Exp. 12-31-17 CIVIL STATE OF CALIFORNIA

The State of California or its officers or agents shall not be responsible for the accuracy or completeness of scanned copies of this plan sheet.

JOINT SEAL TABLE

LOCATION	MR (in)	Approx LENGTH OF EXISTING JOINT (ft)	EXISTING WATERSTOP	Approx DEPTH TO CLEAN Exist JOINT (in)	TYPE	Approx LENGTH OF NEW TYPE B SEAL (ft)
ABUTMENT 1	1½	34	NO	9	B	42
ABUTMENT 4	1½	34	NO	9	B	42

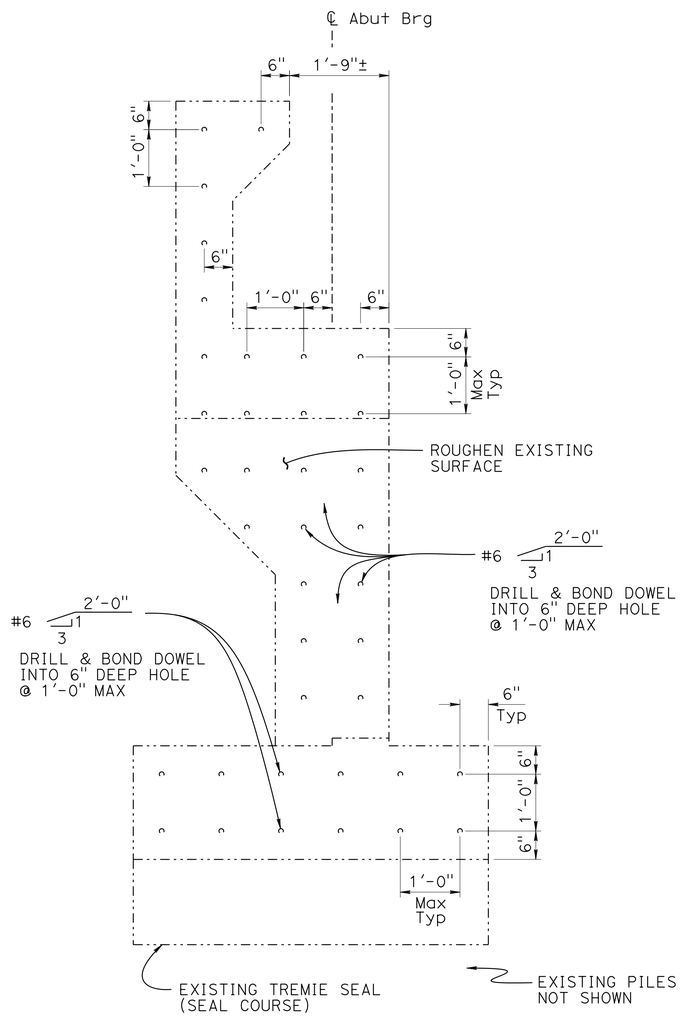

DRILL & BOND
¾" = 1'-0"

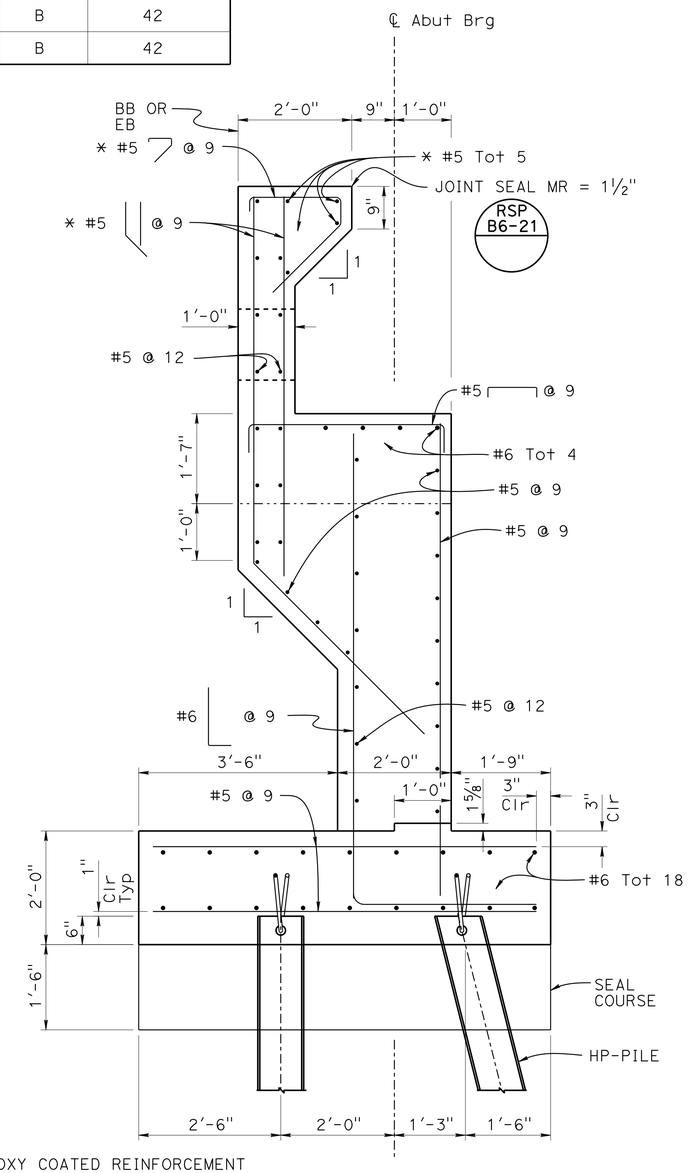

* EPOXY COATED REINFORCEMENT

SECTION A-A
¾" = 1'-0"

NOTES:

1. Seal must satisfy both minimum Movement Rating (MR) and minimum WI requirements.
2. Minimum WI is the calculated maximum width of the joint based on field measurements. After the joints have been cleaned, minimum WI is to be recalculated by the Engineer.
3. WI shall be the smaller of the values determined as follows:
   A) 0.85 Times the manufacturer's designed minimum uncompressed width of the seal.
   B) The width of the seal on the third successive test cycle of the pressure deflection test, when compressed to an average pressure of 20.68 kPa.
4. Bend Type B joint seal 6" Min up into the curb or rail on the low side of the deck where deck joint matches curb or rail joint.

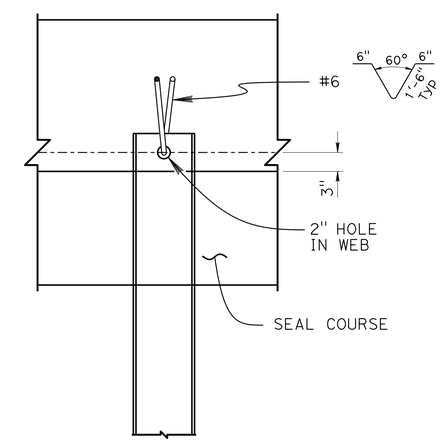

STEEL PILE ANCHOR
1" = 1'-0"

NOTE:
THE CONTRACTOR MUST VERIFY ALL CONTROLLING FIELD DIMENSIONS BEFORE ORDERING OR FABRICATING ANY MATERIAL.

	BY	CHECKED
DESIGN	Quang Nguyen	Eric Burgeson
DETAILS	Jay Reid	Eric Burgeson
QUANTITIES	Mufeed Khalaf	Shadi Motalebi

STATE OF CALIFORNIA
DEPARTMENT OF TRANSPORTATION

DIVISION OF ENGINEERING SERVICES
STRUCTURE DESIGN
DESIGN BRANCH 3

BRIDGE NO. 02-0072
POST MILE 60.17

SEIAD CREEK BRIDGE (WIDEN)
ABUTMENT DETAILS NO. 1

STRUCTURES DESIGN DETAIL SHEET (ENGLISH) (REV. 09-01-10)

ORIGINAL SCALE IN INCHES FOR REDUCED PLANS 0 1 2 3

UNIT: 3578
PROJECT NUMBER & PHASE: 02120000121
CONTRACT NO.: 02-4E6504

DISREGARD PRINTS BEARING EARLIER REVISION DATES

REVISION DATES 2-18-15 4-17-15 6-18-15 5-23-16

SHEET 8 OF 32

FILE => 02-0072-f-a01d+01.dgn

USERNAME => s115152 DATE PLOTTED => 23-AUG-2016 TIME PLOTTED => 06:20

DIST	COUNTY	ROUTE	POST MILES TOTAL PROJECT	SHEET No.	TOTAL SHEETS
02	Sis	96	R52.5/88.4	151	208

Mufeed Khalaf 5/27/16
REGISTERED CIVIL ENGINEER DATE

06-15-16
PLANS APPROVAL DATE

REGISTERED PROFESSIONAL ENGINEER Mufeed Khalaf No. 54260 Exp. 12-31-17 CIVIL STATE OF CALIFORNIA

The State of California or its officers or agents shall not be responsible for the accuracy or completeness of scanned copies of this plan sheet.

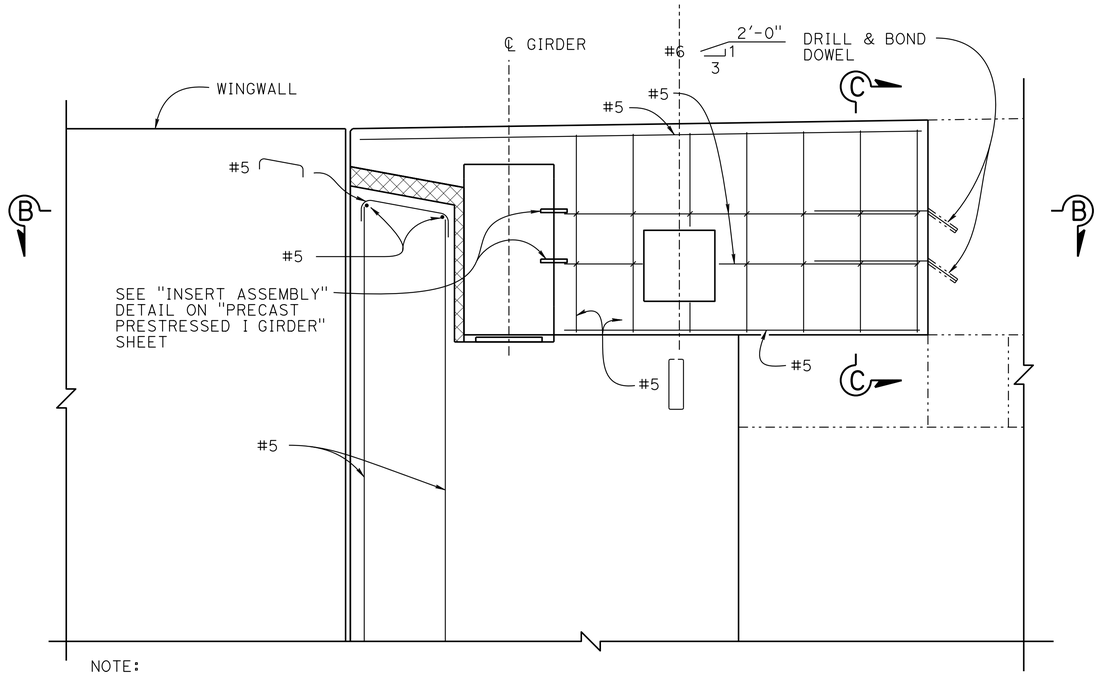

NOTE:

FOR DETAILS NOT SHOWN, SEE "SECTION B-B" & "SECTION C-C"

PART ABUTMENT ELEVATION

3/4" = 1'-0"

NOTE:

FOR DETAILS NOT SHOWN, SEE "ABUTMENT LAYOUT NO. 1" SHEET

* EPOXY COATED REINFORCEMENT

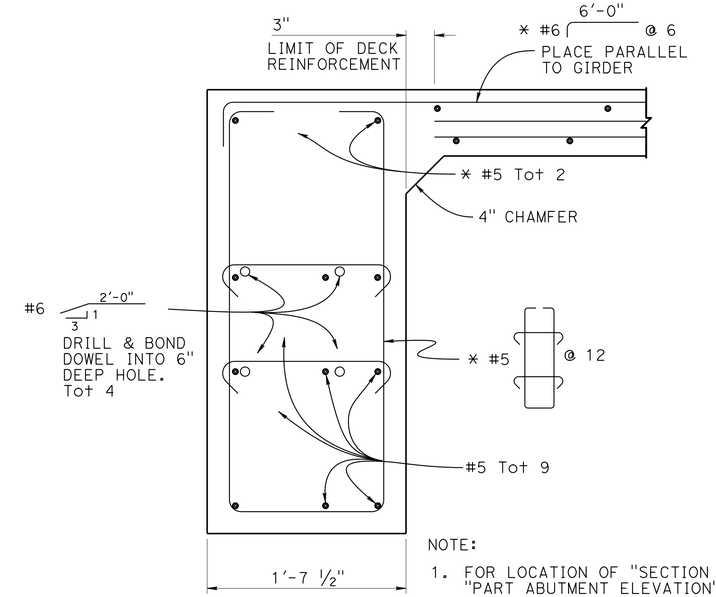

NOTE:

1. FOR LOCATION OF "SECTION C-C" SEE "PART ABUTMENT ELEVATION" DETAIL
2. FOR DETAILS NOT SHOWN, SEE "PART ABUTMENT ELEVATION" & "SECTION B-B"

SECTION C-C

1 1/2" = 1'-0"

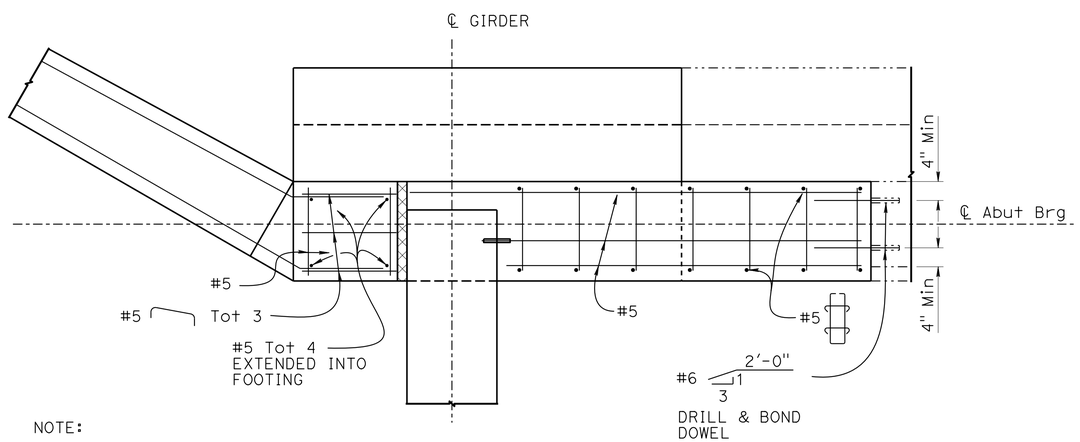

NOTE:

FOR DETAILS NOT SHOWN, SEE "PART ABUTMENT ELEVATION" & "SECTION C-C"

SECTION B-B

3/4" = 1'-0"

NOTE:
THE CONTRACTOR MUST VERIFY ALL CONTROLLING FIELD DIMENSIONS BEFORE ORDERING OR FABRICATING ANY MATERIAL.

	BY	CHECKED
DESIGN	Quang Nguyen	Eric Burgeson
DETAILS	Jay Reid	Eric Burgeson
QUANTITIES	Mufeed Khalaf	Shadi Motalebi

STATE OF CALIFORNIA
DEPARTMENT OF TRANSPORTATION

DIVISION OF ENGINEERING SERVICES
STRUCTURE DESIGN
DESIGN BRANCH 3

BRIDGE NO. 02-0072
POST MILE 60.17

SEIAD CREEK BRIDGE (WIDEN)
ABUTMENT DETAILS NO. 2

STRUCTURES DESIGN DETAIL SHEET (ENGLISH) (REV. 09-01-10)

ORIGINAL SCALE IN INCHES FOR REDUCED PLANS 0 1 2 3

UNIT: 3578
PROJECT NUMBER & PHASE: 02120000121
CONTRACT NO.: 02-4E6504

DISREGARD PRINTS BEARING EARLIER REVISION DATES

REVISION DATES: 2-13-15 4-13-15 6-18-15 5-23-16

SHEET 9 OF 32

FILE => 02-0072-f-a01d+02.dgn

USERNAME => s115152 DATE PLOTTED => 23-AUG-2016 TIME PLOTTED => 08:20

DIST	COUNTY	ROUTE	POST MILES TOTAL PROJECT	SHEET No.	TOTAL SHEETS
02	Sis	96	R52.5/88.4	152	208

Mufeed Khalaf 5/27/16
REGISTERED CIVIL ENGINEER DATE

06-15-16
PLANS APPROVAL DATE

REGISTERED PROFESSIONAL ENGINEER
Mufeed Khalaf
No. 54260
Exp. 12-31-17
CIVIL
STATE OF CALIFORNIA

The State of California or its officers or agents shall not be responsible for the accuracy or completeness of scanned copies of this plan sheet.

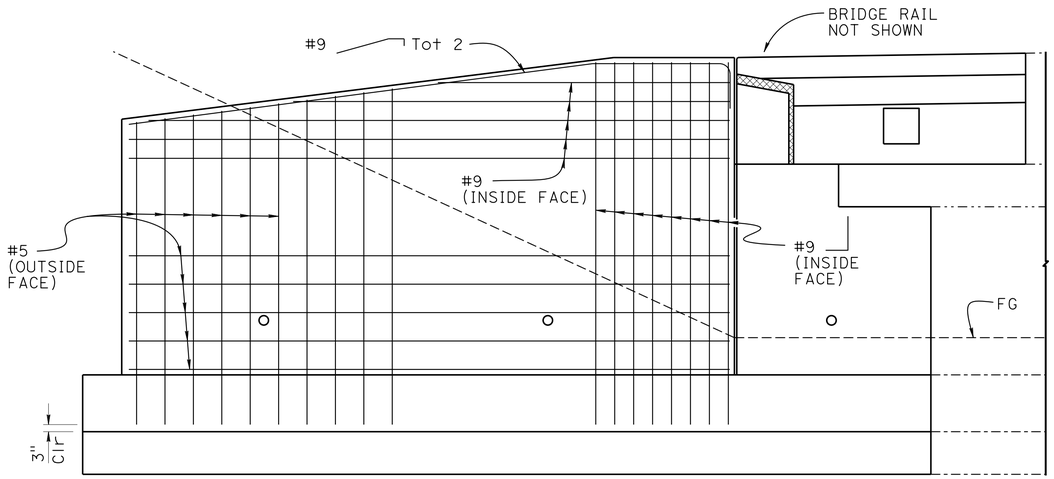

NOTE:

Abutment 1 Right Wingwall shown, all other Wingwalls similar

PILES NOT SHOWN

WINGWALL ELEVATION

3/8" = 1'-0"

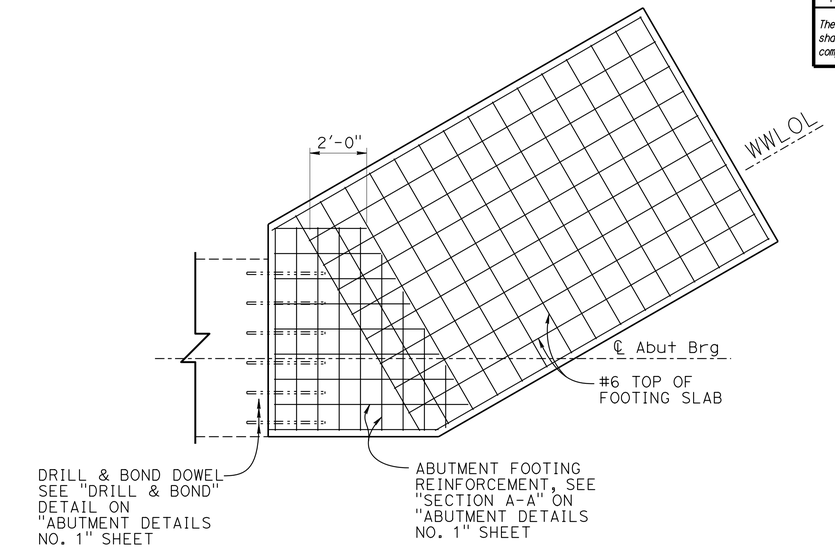

ABUTMENT 1 LEFT WINGWALL FOOTING (ABUTMENT 4 RIGHT WINGWALL SIMILAR)

3/8" = 1'-0"

NOTES:

1. FOR LOCATION AND INFORMATION NOT SHOWN SEE "ABUTMENT LAYOUT", "ABUTMENT DETAILS NO. 1" & "ABUTMENT DETAILS NO. 4" SHEET
2. PILES NOT SHOWN

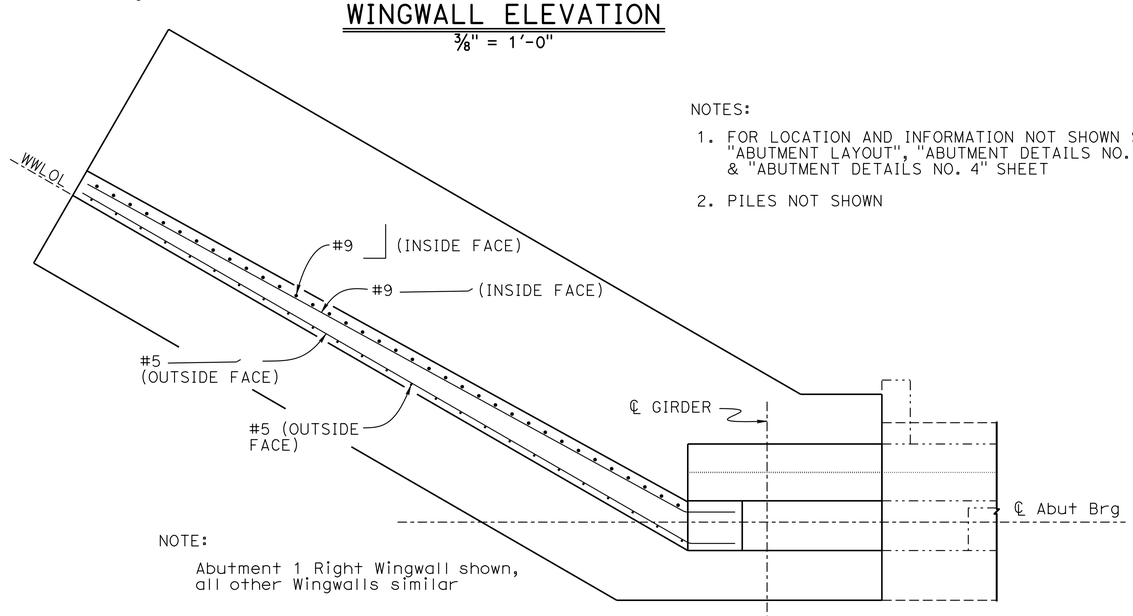

NOTE:

Abutment 1 Right Wingwall shown, all other Wingwalls similar

WINGWALL PLAN

3/8" = 1'-0"

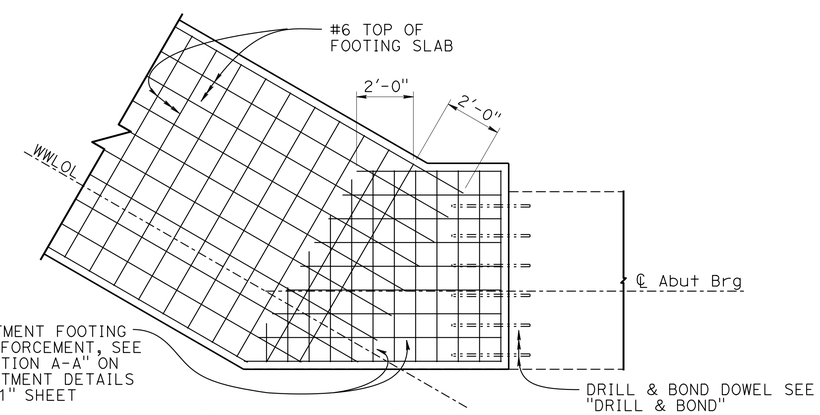

ABUTMENT 1 RIGHT WINGWALL FOOTING (ABUTMENT 4 LEFT WINGWALL SIMILAR)

3/8" = 1'-0"

NOTE:
THE CONTRACTOR MUST VERIFY ALL CONTROLLING FIELD DIMENSIONS BEFORE ORDERING OR FABRICATING ANY MATERIAL.

	BY	CHECKED
DESIGN	Quang Nguyen	Eric Burgeson
DETAILS	Jay Reid	Eric Burgeson
QUANTITIES	Mufeed Khalaf	Shadi Motalebi

STATE OF CALIFORNIA
DEPARTMENT OF TRANSPORTATION

DIVISION OF ENGINEERING SERVICES
STRUCTURE DESIGN
DESIGN BRANCH 3

BRIDGE NO. 02-0072
POST MILE 60.17

SEIAD CREEK BRIDGE (WIDEN)
ABUTMENT DETAILS NO. 3

STRUCTURES DESIGN DETAIL SHEET (ENGLISH) (REV. 09-01-10)

ORIGINAL SCALE IN INCHES FOR REDUCED PLANS 0 1 2 3

UNIT: 3578
PROJECT NUMBER & PHASE: 02120000121
CONTRACT NO.: 02-4E6504

DISREGARD PRINTS BEARING EARLIER REVISION DATES

REVISION DATES: 2-18-15 4-17-15 6-18-15 5-23-16

SHEET 10 OF 32

FILE => 02-0072-f-a01d+03.dgn

USERNAME => s115152 DATE PLOTTED => 23-AUG-2016 TIME PLOTTED => 06:20

DIST	COUNTY	ROUTE	POST MILES TOTAL PROJECT	SHEET No.	TOTAL SHEETS
02	Sis	96	R52.5/88.4	153	208

Mufeed Khalaf 5/27/16
REGISTERED CIVIL ENGINEER DATE

06-15-16
PLANS APPROVAL DATE

REGISTERED PROFESSIONAL ENGINEER Mufeed Khalaf No. 54260 Exp. 12-31-17 CIVIL STATE OF CALIFORNIA

The State of California or its officers or agents shall not be responsible for the accuracy or completeness of scanned copies of this plan sheet.

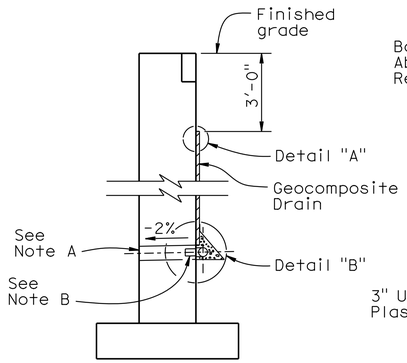

WALL SECTION

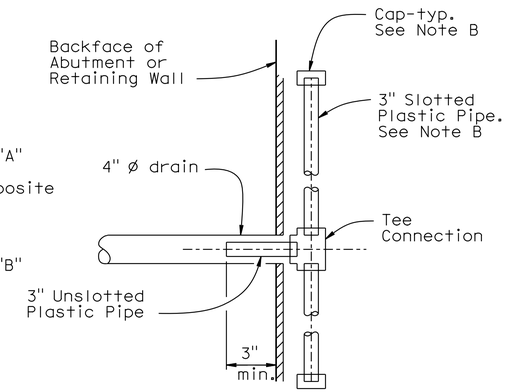

SECTION A-A

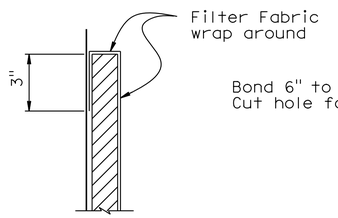

DETAIL "A"

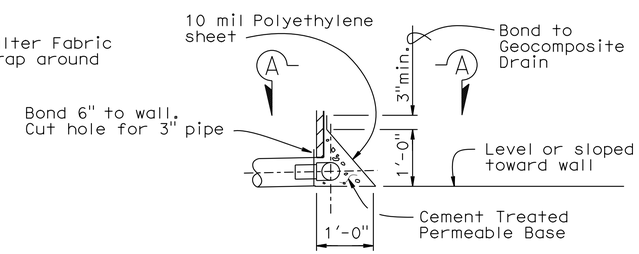

DETAIL "B"

WEEP HOLE AND GEOCOMPOSITE DRAIN

ALTERNATIVE TO BRIDGE DETAIL (B0-3 / 3-1)

NOTES:

A. 4" ø drains at intermediate sag points and at 25' max center to center (9' c-c for Type 3 and 9'-3" c-c for Type 4 retaining walls).
For walls adjacent to sidewalks or curbs, provide 4" ø plastic pipe under the sidewalk to discharge through curb face.
Exposed wall drains shall be located 3"± above finished grade.

B. Geocomposite drain, cement treated permeable base, and 3"ø slotted plastic pipe continuous behind retaining wall or abutment. Cap ends of pipe. Provide "Tee" connection at each 4" ø drain.

C. Connect the low end of plastic pipe to the main outlet pipe as applicable.

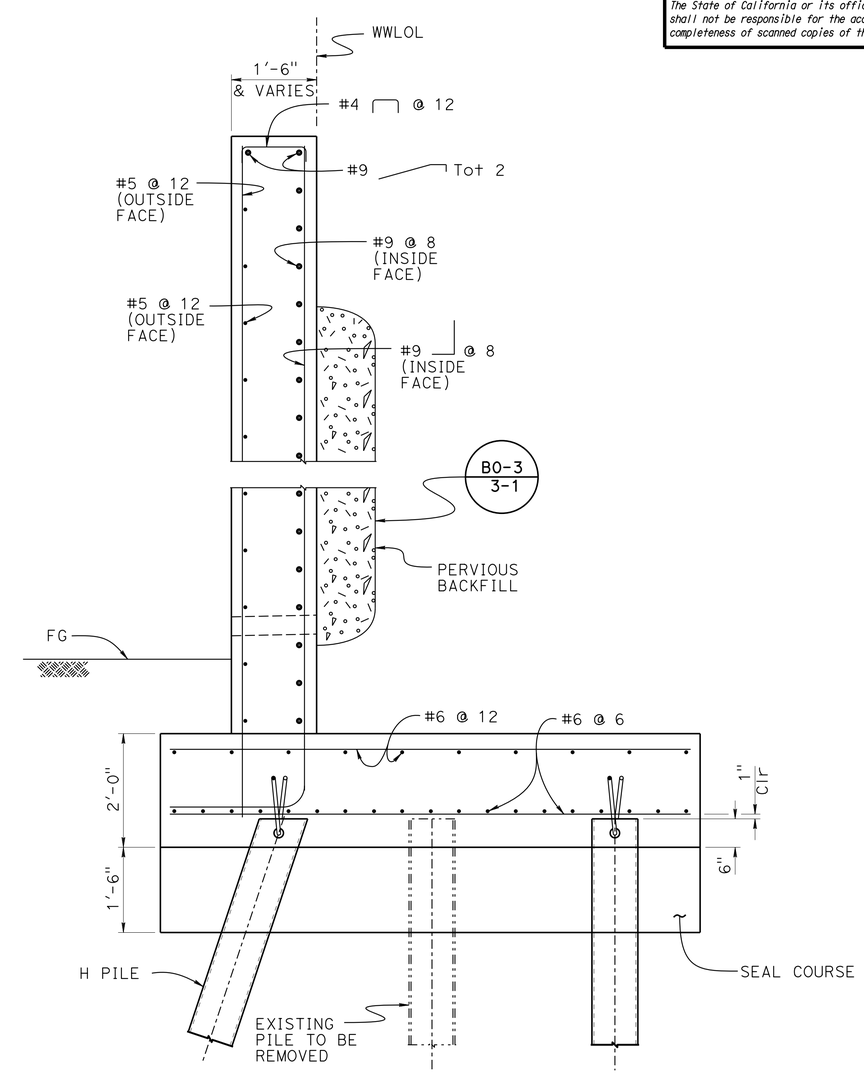

SECTION D-D
3/4" = 1'-0"

NOTE:
FOR LOCATION OF "SECTION D-D" SEE "ABUTMENT LAYOUT NO. 1" SHEET

NOTE:
THE CONTRACTOR MUST VERIFY ALL CONTROLLING FIELD DIMENSIONS BEFORE ORDERING OR FABRICATING ANY MATERIAL.

	BY	CHECKED
DESIGN	Quang Nguyen	Eric Burgeson
DETAILS	Jay Reid	Eric Burgeson
QUANTITIES	Mufeed Khalaf	Shadi Motalebi

STATE OF CALIFORNIA
DEPARTMENT OF TRANSPORTATION

DIVISION OF ENGINEERING SERVICES
STRUCTURE DESIGN
DESIGN BRANCH 3

BRIDGE NO. 02-0072
POST MILE 60.17

SEIAD CREEK BRIDGE (WIDEN)
ABUTMENT DETAILS NO. 4

STRUCTURES DESIGN DETAIL SHEET (ENGLISH) (REV. 09-01-10)

ORIGINAL SCALE IN INCHES FOR REDUCED PLANS 0 1 2 3

UNIT: 3578
PROJECT NUMBER & PHASE: 02120000121
CONTRACT NO.: 02-4E6504

DISREGARD PRINTS BEARING EARLIER REVISION DATES

REVISION DATES: 2-14-15 4-13-15 6-18-15 5-23-16

SHEET 11 OF 32

FILE => 02-0072-f-a01dt04.dgn

USERNAME => s175152 DATE PLOTTED => 23-AUG-2016 TIME PLOTTED => 06:20

DIST	COUNTY	ROUTE	POST MILES TOTAL PROJECT	SHEET No.	TOTAL SHEETS
02	Sis	96	R52.5/88.4	154	208

Mufeed Khalaf 5/27/16
REGISTERED CIVIL ENGINEER DATE

06-15-16
PLANS APPROVAL DATE

REGISTERED PROFESSIONAL ENGINEER Mufeed Khalaf No. 54260 Exp. 12-31-17 CIVIL STATE OF CALIFORNIA

The State of California or its officers or agents shall not be responsible for the accuracy or completeness of scanned copies of this plan sheet.

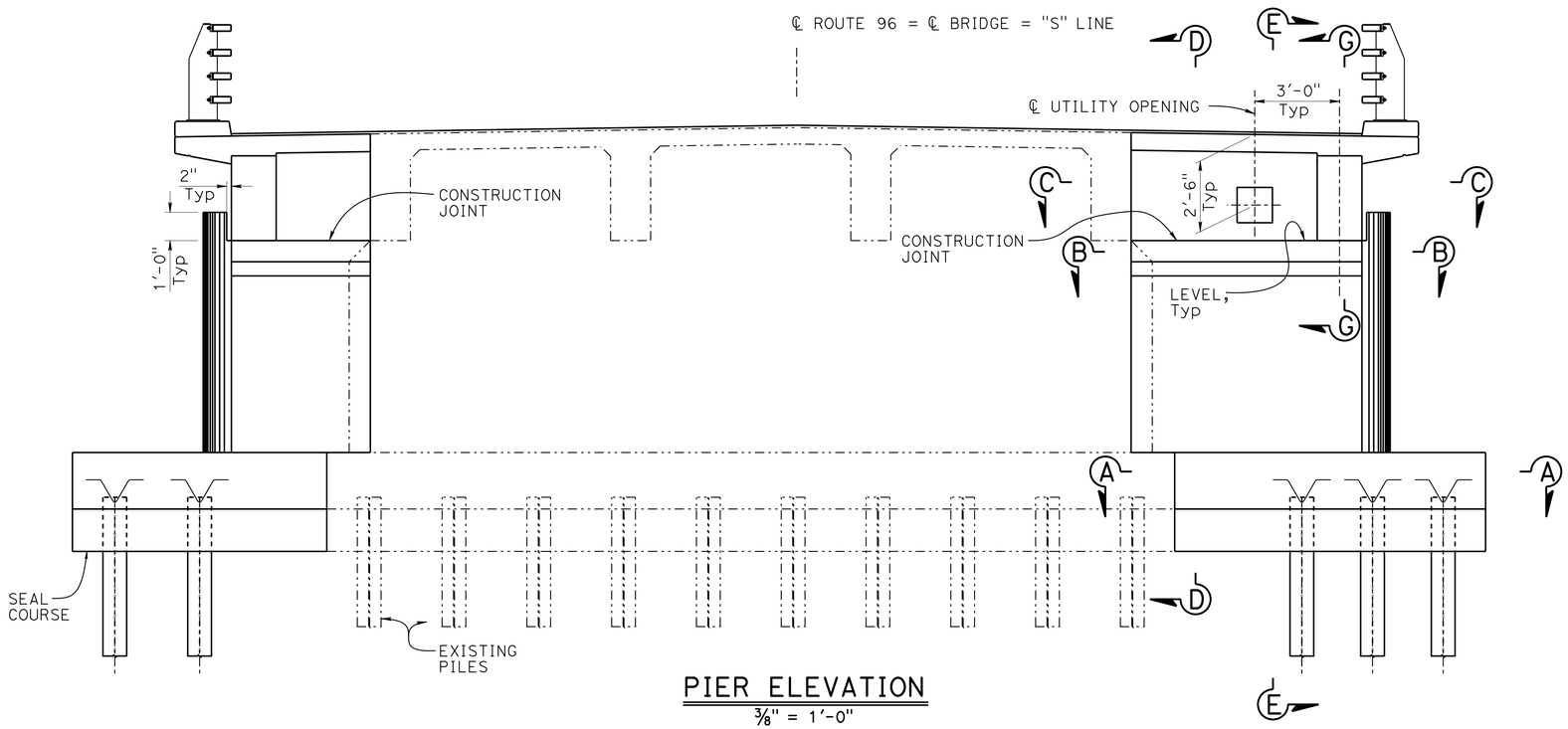

PIER ELEVATION

3/8" = 1'-0"

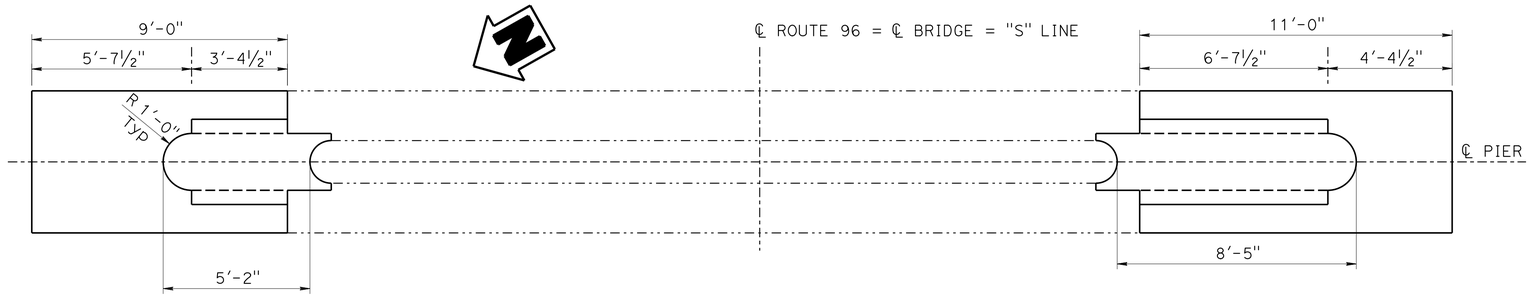

PIER PLAN

3/8" = 1'-0"

NOTES:

1. PIER 2 SHOWN
   PIER 3 SIMILAR
2. FOR DETAILS SEE "PIER DETAILS NO. 1" & "PIER DETAILS NO. 2" SHEETS

NOTE:
THE CONTRACTOR MUST VERIFY ALL CONTROLLING FIELD DIMENSIONS BEFORE ORDERING OR FABRICATING ANY MATERIAL.

	BY	CHECKED
DESIGN	Quang Nguyen	Eric Burgeson
DETAILS	Jay Reid	Eric Burgeson
QUANTITIES	Mufeed Khalaf	Shadi Motalebi

STATE OF CALIFORNIA
DEPARTMENT OF TRANSPORTATION

DIVISION OF ENGINEERING SERVICES
STRUCTURE DESIGN
DESIGN BRANCH 3

BRIDGE NO. 02-0072
POST MILE 60.17

SEIAD CREEK BRIDGE (WIDEN)
PIER LAYOUT

STRUCTURES DESIGN DETAIL SHEET (ENGLISH) (REV. 09-01-10)

ORIGINAL SCALE IN INCHES FOR REDUCED PLANS 0 1 2 3

UNIT: 3578
PROJECT NUMBER & PHASE: 02120000121
CONTRACT NO.: 02-4E6504

DISREGARD PRINTS BEARING EARLIER REVISION DATES

REVISION DATES: 2-14-15 4-17-15 6-18-15 5-23-16

SHEET 12 OF 32

FILE => 02-0072-h-b01_lo1.dgn

USERNAME => s115152 DATE PLOTTED => 23-AUG-2016 TIME PLOTTED => 06:20

DIST	COUNTY	ROUTE	POST MILES TOTAL PROJECT	SHEET No.	TOTAL SHEETS
02	Sis	96	R52.5/88.4	155	208

Mufeed Khalaf 5/27/16
REGISTERED CIVIL ENGINEER DATE

06-15-16
PLANS APPROVAL DATE

REGISTERED PROFESSIONAL ENGINEER Mufeed Khalaf No. 54260 Exp. 12-31-17 CIVIL STATE OF CALIFORNIA

The State of California or its officers or agents shall not be responsible for the accuracy or completeness of scanned copies of this plan sheet.

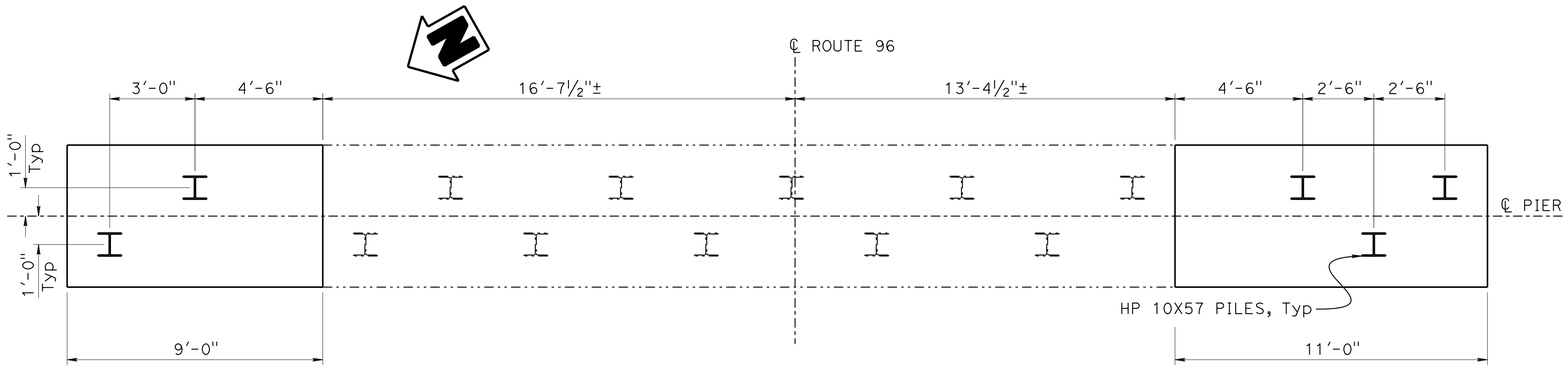

PIER PILE LAYOUT
⅜" = 1'-0"

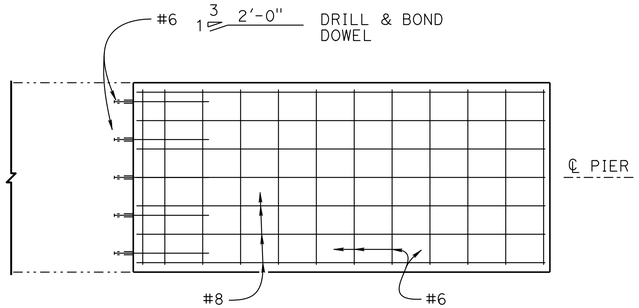

SECTION A-A
½" = 1'-0"

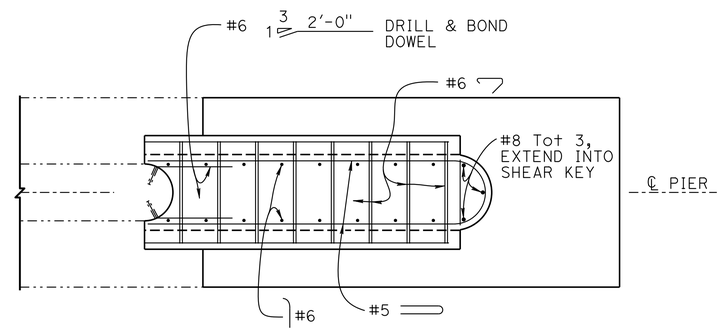

SECTION B-B
½" = 1'-0"

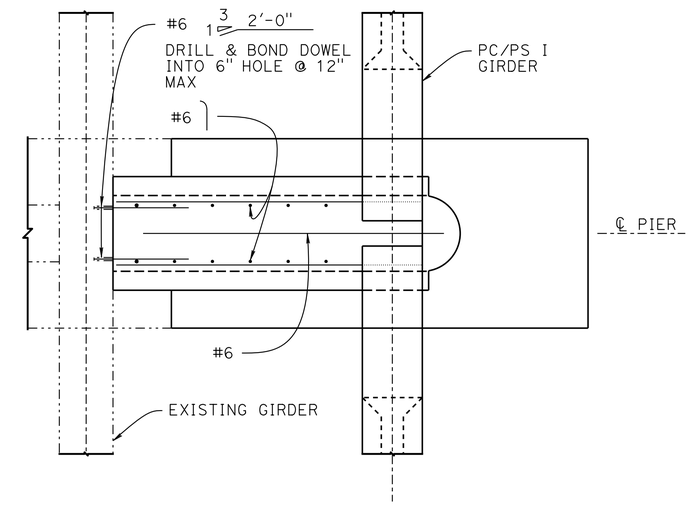

SECTION C-C
½" = 1'-0"

NOTES:

1. RIGHT SIDE SHOWN, LEFT SIDE SIMILAR
2. FOR SECTION LOCATIONS, SEE "PIER LAYOUT" SHEET

NOTE:
THE CONTRACTOR MUST VERIFY ALL CONTROLLING FIELD DIMENSIONS BEFORE ORDERING OR FABRICATING ANY MATERIAL.

	BY	CHECKED
DESIGN	Quang Nguyen	Eric Burgeson
DETAILS	Jay Reid	Eric Burgeson
QUANTITIES	Mufeed Khalaf	Shadi Motalebi

STATE OF CALIFORNIA
DEPARTMENT OF TRANSPORTATION

DIVISION OF ENGINEERING SERVICES
STRUCTURE DESIGN
DESIGN BRANCH 3

BRIDGE NO. 02-0072
POST MILE 60.17

SEIAD CREEK BRIDGE (WIDEN)
PIER DETAILS NO. 1

STRUCTURES DESIGN DETAIL SHEET (ENGLISH) (REV. 09-01-10)

ORIGINAL SCALE IN INCHES FOR REDUCED PLANS 0 1 2 3

UNIT: 3578
PROJECT NUMBER & PHASE: 02120000121
CONTRACT NO.: 02-4E6504

DISREGARD PRINTS BEARING EARLIER REVISION DATES

REVISION DATES: 2-13-15 4-17-15 6-18-15 5-23-16

SHEET 13 OF 32

FILE => 02-0072-h-b01dt01.dgn

USERNAME => s115152 DATE PLOTTED => 23-AUG-2016 TIME PLOTTED => 06:20

DIST	COUNTY	ROUTE	POST MILES TOTAL PROJECT	SHEET No.	TOTAL SHEETS
02	Sis	96	R52.5/88.4	156	208

Mufeed Khalaf 5/27/16
REGISTERED CIVIL ENGINEER DATE

06-15-16
PLANS APPROVAL DATE

REGISTERED PROFESSIONAL ENGINEER Mufeed Khalaf No. 54260 Exp. 12-31-17 CIVIL STATE OF CALIFORNIA

The State of California or its officers or agents shall not be responsible for the accuracy or completeness of scanned copies of this plan sheet.

NOTES:

1. RIGHT SIDE SHOWN, LEFT SIDE SIMILAR
2. FOR SECTION LOCATIONS, SEE "PIER LAYOUT" SHEET

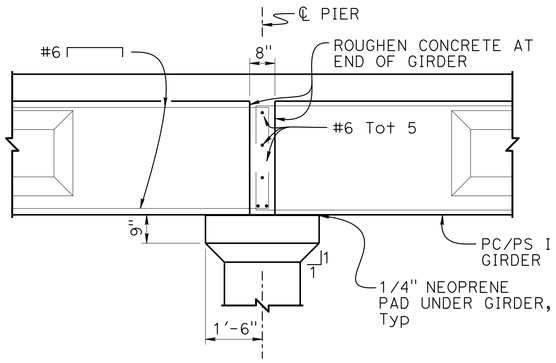

SECTION G-G
½" = 1'-0"

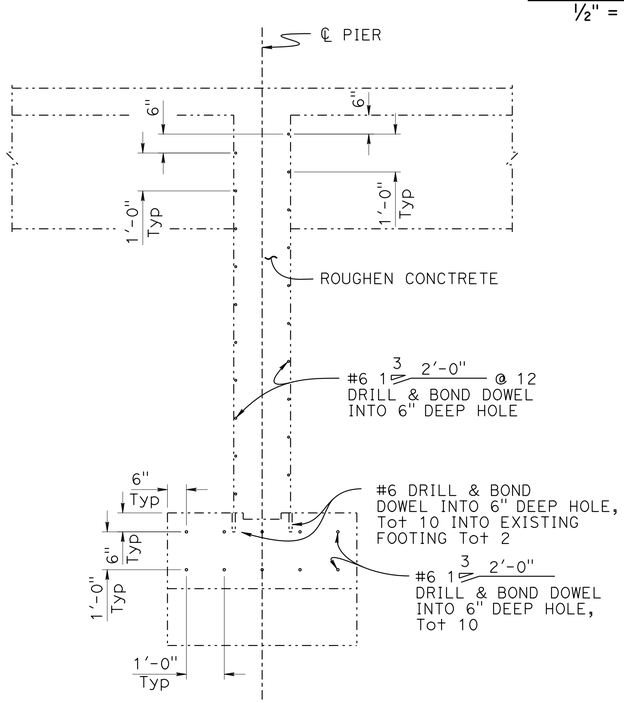

SECTION D-D
½" = 1'-0"

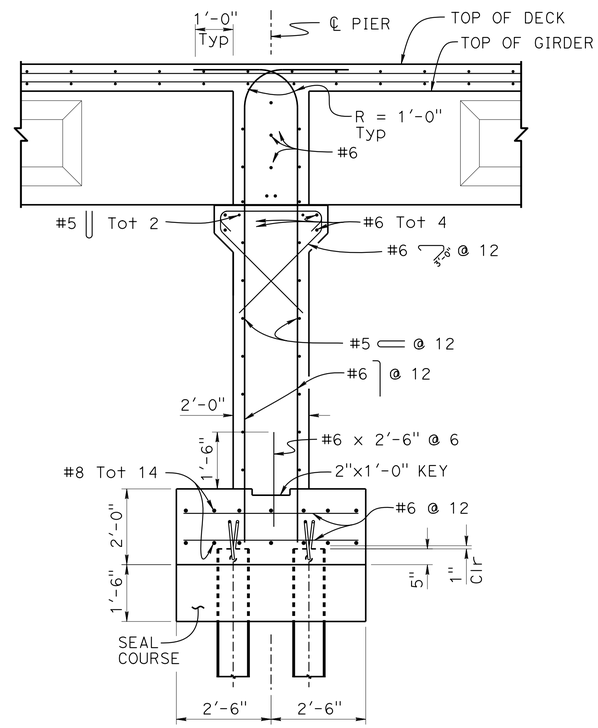

SECTION E-E
½" = 1'-0"

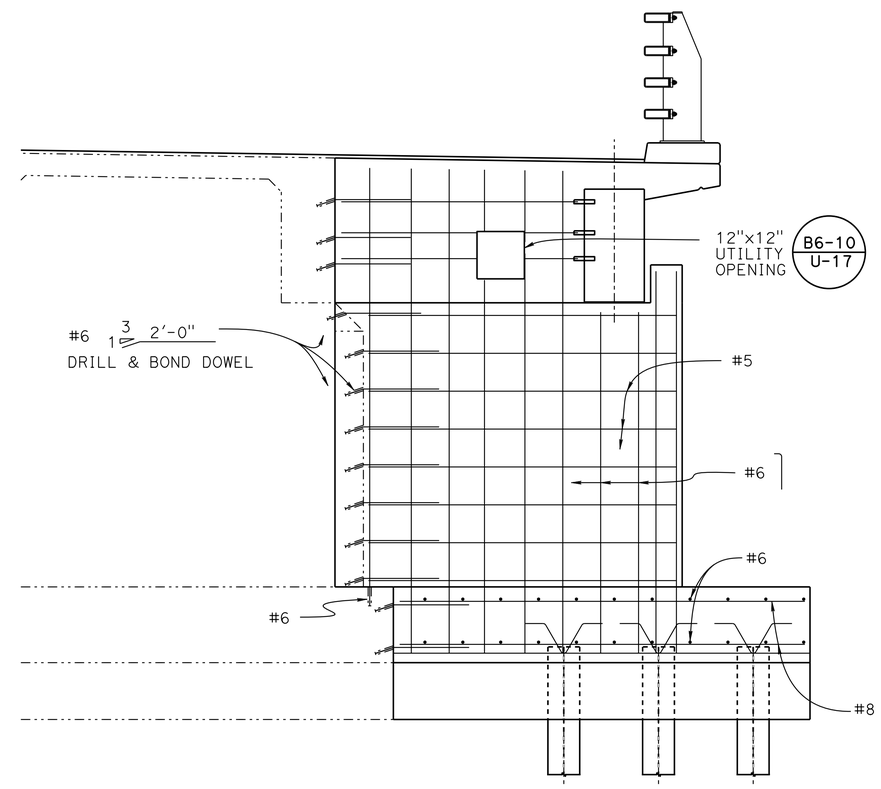

PIER REINFORCEMENT ELEVATION
½" = 1'-0"

NOTE:
THE CONTRACTOR MUST VERIFY ALL CONTROLLING FIELD DIMENSIONS BEFORE ORDERING OR FABRICATING ANY MATERIAL.

	BY	CHECKED
DESIGN	Quang Nguyen	Eric Burgeson
DETAILS	Jay Reid	Eric Burgeson
QUANTITIES	Mufeed Khalaf	Shadi Motalebi

STATE OF CALIFORNIA
DEPARTMENT OF TRANSPORTATION

DIVISION OF ENGINEERING SERVICES
STRUCTURE DESIGN
DESIGN BRANCH 3

BRIDGE NO. 02-0072
POST MILE 60.17

SEIAD CREEK BRIDGE (WIDEN)
PIER DETAILS NO. 2

STRUCTURES DESIGN DETAIL SHEET (ENGLISH) (REV. 09-01-10)

ORIGINAL SCALE IN INCHES FOR REDUCED PLANS 0 1 2 3

UNIT: 3578
PROJECT NUMBER & PHASE: 02120000121
CONTRACT NO.: 02-4E6504

DISREGARD PRINTS BEARING EARLIER REVISION DATES

REVISION DATES: 2-14-15 4-17-15 6-16-15 5-23-16

SHEET 14 OF 32

FILE => 02-0072-h-b01dt02.dgn

USERNAME => s115152 DATE PLOTTED => 23-AUG-2016 TIME PLOTTED => 08:20

DIST	COUNTY	ROUTE	POST MILES TOTAL PROJECT	SHEET No.	TOTAL SHEETS
02	Sis	96	R52.5/88.4	157	208

Mufeed Khalaf 5/27/16
REGISTERED CIVIL ENGINEER DATE

06-15-16
PLANS APPROVAL DATE

REGISTERED PROFESSIONAL ENGINEER Mufeed Khalaf No. 54260 Exp. 12-31-17 CIVIL STATE OF CALIFORNIA

The State of California or its officers or agents shall not be responsible for the accuracy or completeness of scanned copies of this plan sheet.

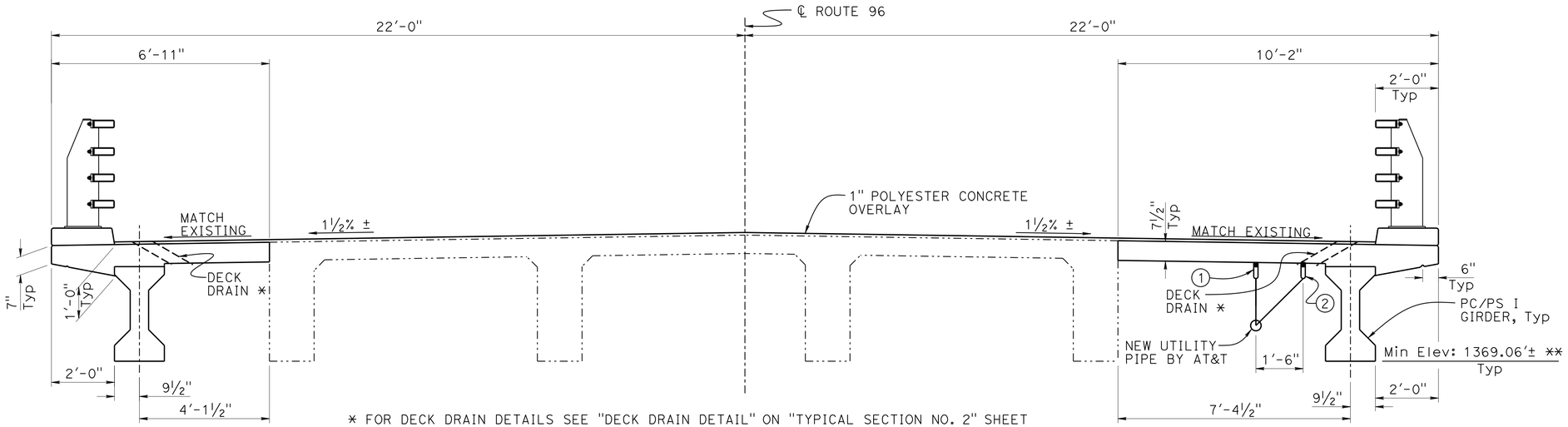

* FOR DECK DRAIN DETAILS SEE "DECK DRAIN DETAIL" ON "TYPICAL SECTION NO. 2" SHEET

** MAINTAIN BOTTOM OF PC/PS I GIRDERS LEVEL WITH OR ABOVE BOTTOM OF EXISTING GIRDERS

TYPICAL SECTION

½" = 1'-0"

NOTES:

1. 5/8" CAST IN PLACE CONCRETE ANCHOR TO BE PROVIDED BY AT&T @ 10' Tot 15
2. 5/8" CAST IN PLACE CONCRETE ANCHOR TO BE PROVIDED BY AT&T @ 30' Tot 5

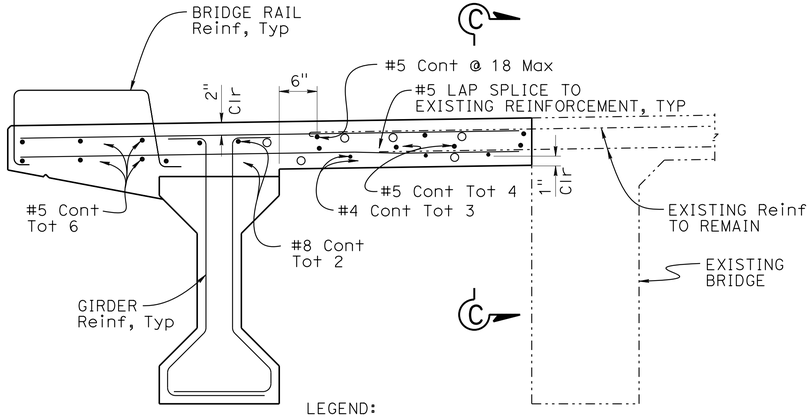

LEGEND:

○ INDICATES ADDITIONAL REINFORCEMENT SEE, "ADDITIONAL REINFORCEMENT" DETAIL ON "GIRDER LAYOUT" SHEET

PART TYPICAL SECTION (LEFT)

1" = 1'-0"

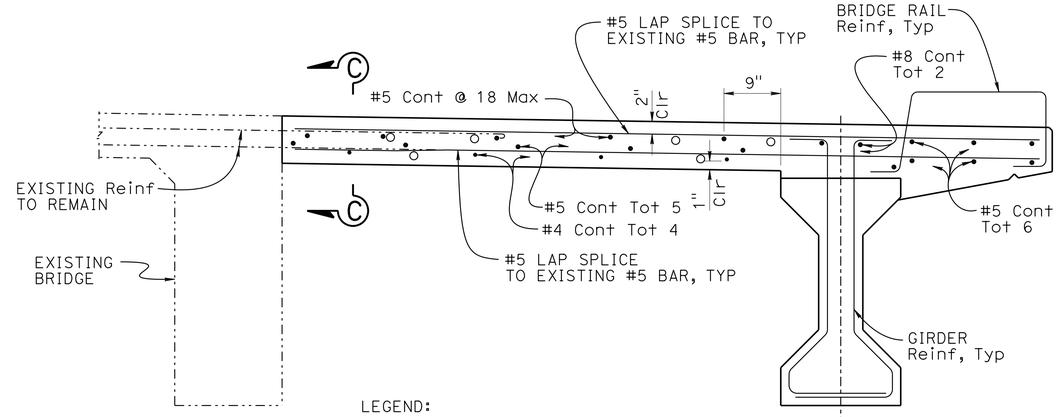

LEGEND:

○ INDICATES ADDITIONAL REINFORCEMENT SEE, "ADDITIONAL REINFORCEMENT" DETAIL ON "GIRDER LAYOUT" SHEET

PART TYPICAL SECTION (RIGHT)

1" = 1'-0"

NOTES:

1. FOR "SECTION C-C", SEE "TYPICAL SECTION NO. 2" SHEET
2. ALL DECK REINFORCEMENT & BARRIER REINFORCEMENT TO BE EPOXY COATED.
3. FOR "BARRIER DETAILS" NOT SHOWN, SEE "CALIFORNIA ST-70 BRIDGE RAIL" SHEETS

NOTE:
THE CONTRACTOR MUST VERIFY ALL CONTROLLING FIELD DIMENSIONS BEFORE ORDERING OR FABRICATING ANY MATERIAL.

	BY	CHECKED
DESIGN	Quang Nguyen	Eric Burgeson
DETAILS	Jay Reid	Eric Burgeson
QUANTITIES	Mufeed Khalaf	Shadi Motalebi

STATE OF CALIFORNIA
DEPARTMENT OF TRANSPORTATION

DIVISION OF ENGINEERING SERVICES
STRUCTURE DESIGN
DESIGN BRANCH 3

BRIDGE NO. 02-0072
POST MILE 60.17

SEIAD CREEK BRIDGE (WIDEN)
TYPICAL SECTION NO. 1

STRUCTURES DESIGN DETAIL SHEET (ENGLISH) (REV. 09-01-10)

ORIGINAL SCALE IN INCHES FOR REDUCED PLANS 0 1 2 3

UNIT: 3578
PROJECT NUMBER & PHASE: 02120000121
CONTRACT NO.: 02-4E6504

DISREGARD PRINTS BEARING EARLIER REVISION DATES

REVISION DATES: ~~2-18-15~~ ~~4-17-15~~ ~~6-18-15~~ 5-23-16

SHEET 15 OF 32

FILE => 02-0072-k-typ01.dgn

USERNAME => s115152 DATE PLOTTED => 23-AUG-2016 TIME PLOTTED => 06:20

DIST	COUNTY	ROUTE	POST MILES TOTAL PROJECT	SHEET No.	TOTAL SHEETS
02	Sis	96	R52.5/88.4	158	208

Mufeed Khalaf 5/27/16
REGISTERED CIVIL ENGINEER DATE

06-15-16
PLANS APPROVAL DATE

REGISTERED PROFESSIONAL ENGINEER Mufeed Khalaf No. 54260 Exp. 12-31-17 CIVIL STATE OF CALIFORNIA

The State of California or its officers or agents shall not be responsible for the accuracy or completeness of scanned copies of this plan sheet.

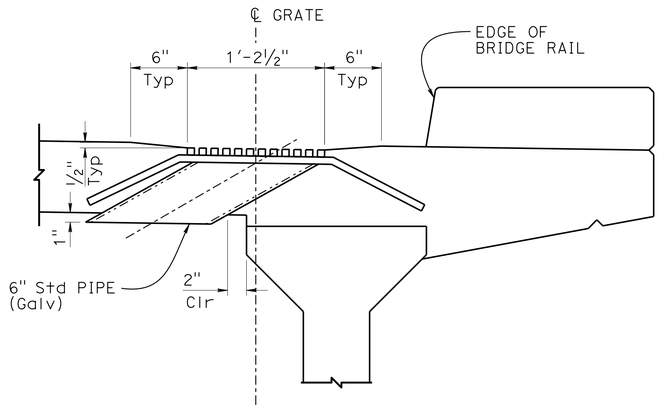

TYPICAL SECTION

NOTES:

1. FOR DECK DRAIN LOCATIONS SEE "GIRDER LAYOUT" SHEET
2. GALVANIZE DRAIN AFTER FABRICATION

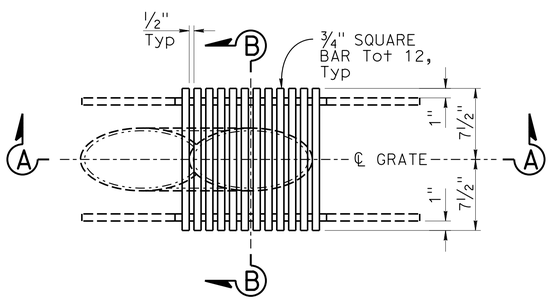

PLAN

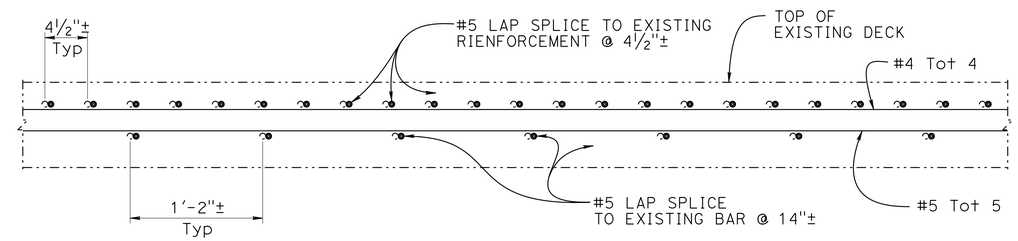

NOTE:

FOR LOCATION OF "SECTION C-C" SEE "TYPICAL SECTION NO. 1" SHEET

SECTION C-C

1 ½" = 1'-0"

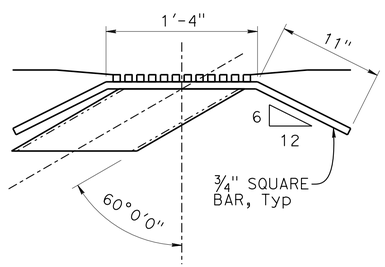

SECTION A-A

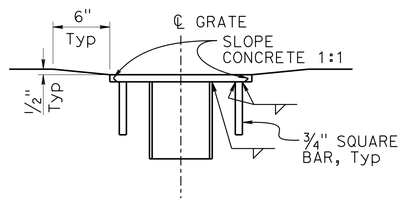

SECTION B-B

DECK DRAIN DETAIL

1 ½" = 1'-0"

NOTE:
THE CONTRACTOR MUST VERIFY ALL CONTROLLING FIELD DIMENSIONS BEFORE ORDERING OR FABRICATING ANY MATERIAL.

	BY	CHECKED
DESIGN	Quang Nguyen	Eric Burgeson
DETAILS	Jay Reid	Eric Burgeson
QUANTITIES	Mufeed Khalaf	Shadi Motalebi

STATE OF CALIFORNIA
DEPARTMENT OF TRANSPORTATION

DIVISION OF ENGINEERING SERVICES
STRUCTURE DESIGN
DESIGN BRANCH 3

BRIDGE NO. 02-0072
POST MILE 60.17

SEIAD CREEK BRIDGE (WIDEN)
TYPICAL SECTION NO. 2

STRUCTURES DESIGN DETAIL SHEET (ENGLISH) (REV. 09-01-10)

ORIGINAL SCALE IN INCHES FOR REDUCED PLANS 0 1 2 3

UNIT: 3578
PROJECT NUMBER & PHASE: 02120000121
CONTRACT NO.: 02-4E6504

DISREGARD PRINTS BEARING EARLIER REVISION DATES

REVISION DATES: 2-14-15 4-17-15 6-18-15 5-23-16

SHEET 16 OF 32

FILE => 02-0072-k-typ02.dgn

USERNAME => s115152 DATE PLOTTED => 23-AUG-2016 TIME PLOTTED => 06:20

DIST	COUNTY	ROUTE	POST MILES TOTAL PROJECT	SHEET No.	TOTAL SHEETS
02	Sis	96	R52.5/88.4	159	208

Mufeed Khalaf 5/27/16
REGISTERED CIVIL ENGINEER DATE

06-15-16
PLANS APPROVAL DATE

REGISTERED PROFESSIONAL ENGINEER Mufeed Khalaf No. 54260 Exp. 12-31-17 CIVIL STATE OF CALIFORNIA

The State of California or its officers or agents shall not be responsible for the accuracy or completeness of scanned copies of this plan sheet.

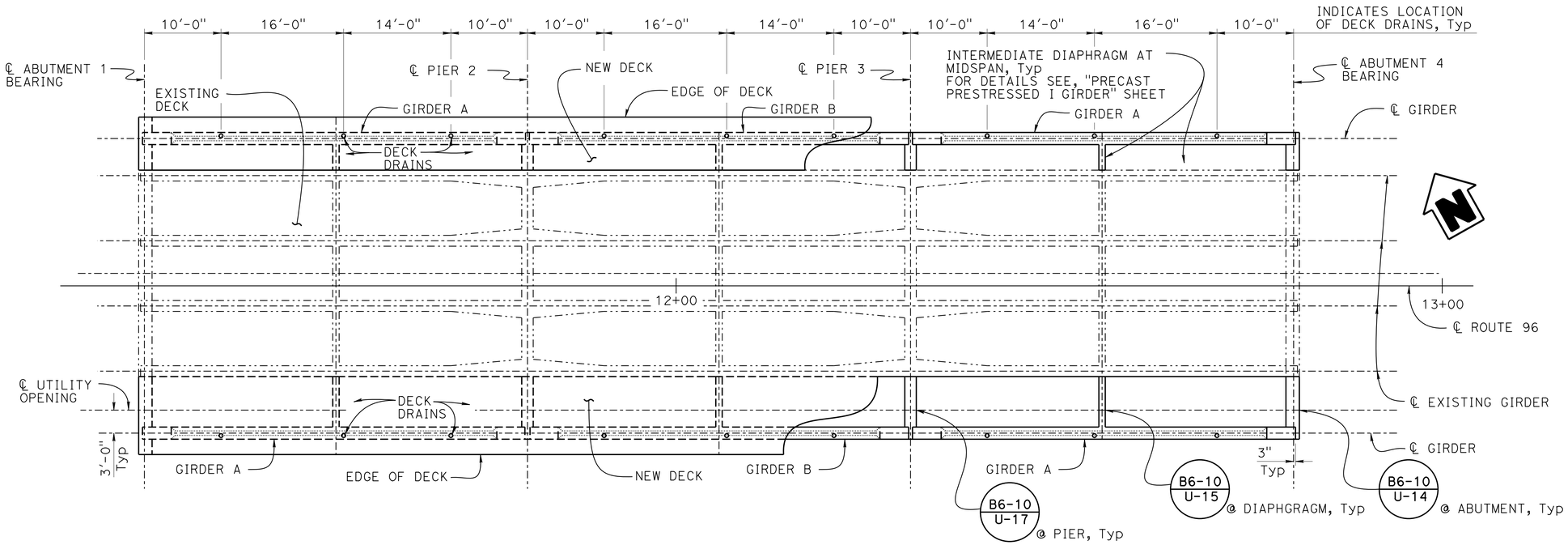

GIRDER PLAN
1/8" = 1'-0"

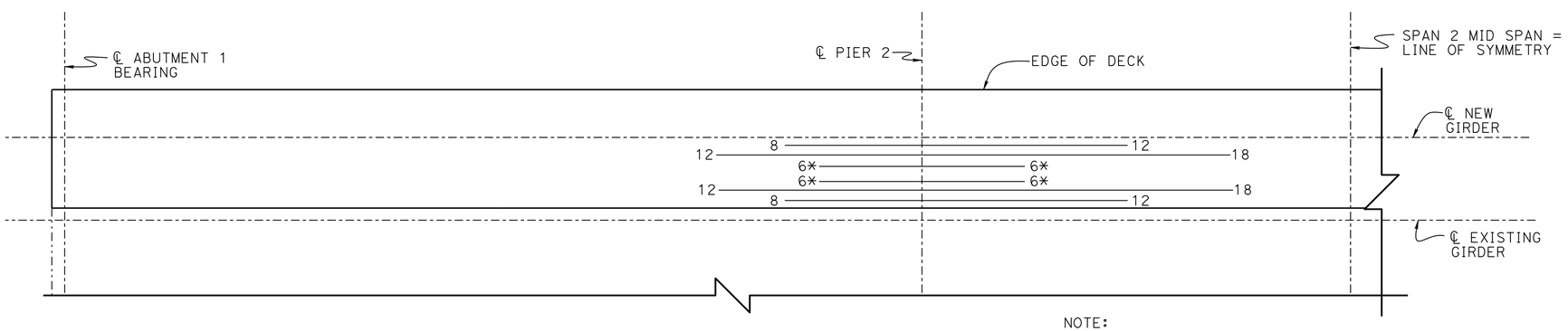

NOTE:
* Bottom Reinforcement

ADDITIONAL REINFORCEMENT
1/4" = 1'-0"

NOTES:

1. All Reinforcement bars are #9 Epoxy coated unless otherwise indicated
2. Numbers of ends of bars indicate distance in ft from ℄ PIER or ℄ span to end of bar
3. One side shown other side similar

NOTE:
THE CONTRACTOR MUST VERIFY ALL CONTROLLING FIELD DIMENSIONS BEFORE ORDERING OR FABRICATING ANY MATERIAL.

	BY	CHECKED
DESIGN	Quang Nguyen	Eric Burgeson
DETAILS	Jay Reid	Eric Burgeson
QUANTITIES	Mufeed Khalaf	Shadi Motalebi

STATE OF CALIFORNIA
DEPARTMENT OF TRANSPORTATION

DIVISION OF ENGINEERING SERVICES
STRUCTURE DESIGN
DESIGN BRANCH 3

BRIDGE NO. 02-0072
POST MILE 60.17

SEIAD CREEK BRIDGE (WIDEN)
GIRDER LAYOUT

STRUCTURES DESIGN DETAIL SHEET (ENGLISH) (REV. 09-01-10)

ORIGINAL SCALE IN INCHES FOR REDUCED PLANS 0 1 2 3

UNIT: 3578
PROJECT NUMBER & PHASE: 02120000121
CONTRACT NO.: 02-4E6504

DISREGARD PRINTS BEARING EARLIER REVISION DATES

REVISION DATES: 2-18-15 4-17-15 6-18-15 5-23-16

SHEET 17 OF 32

FILE => 02-0072-1-glo01.dgn

USERNAME => s115152 DATE PLOTTED => 23-AUG-2016 TIME PLOTTED => 06:20

DIST	COUNTY	ROUTE	POST MILES TOTAL PROJECT	SHEET No.	TOTAL SHEETS
02	Sis	96	R52.5/88.4	160	208

Mufeed Khalaf 5/27/16
REGISTERED CIVIL ENGINEER DATE

06-15-16
PLANS APPROVAL DATE

REGISTERED PROFESSIONAL ENGINEER Mufeed Khalaf No. 54260 Exp. 12-31-17 CIVIL STATE OF CALIFORNIA

The State of California or its officers or agents shall not be responsible for the accuracy or completeness of scanned copies of this plan sheet.

BRIDGE DECK REPAIR TABLE

APPROXIMATE AREA DAMAGED (%)	APPROXIMATE DEPTH (in)	REMOVE UNSOUND CONCRETE ft^3	RAPID SETTING CONCRETE (PATCH) ft^3
5%	3"	53	53

LEGEND:

Area of unsound concrete removal

Polyester concrete overlay

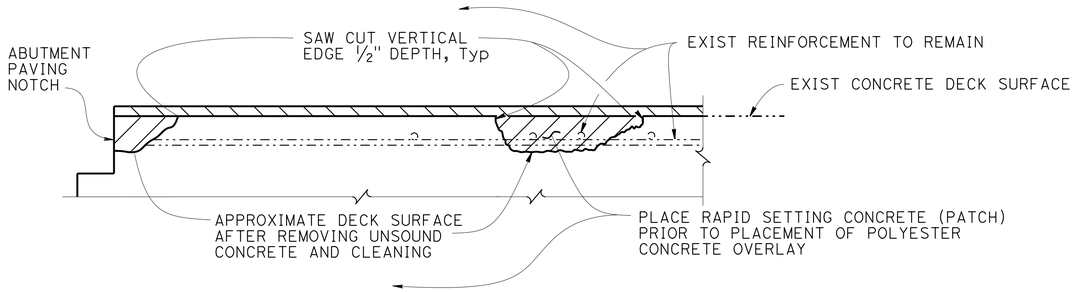

DECK REPAIR DETAIL

No Scale

LOCATIONS TO BE DETERMINED BY THE ENGINEER. REINFORCEMENT MAY BE ENCOUNTERED DURING DECK CONCRETE REMOVAL AND IS TO REMAIN UNDAMAGED

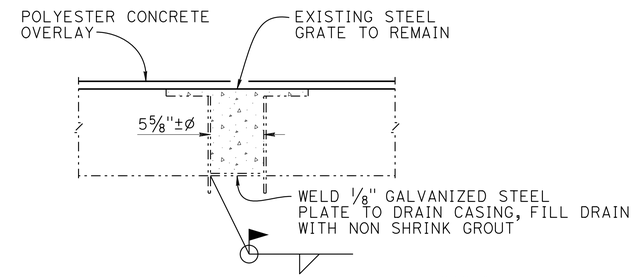

EXISTING DRAIN PLUG DETAIL

1 1/2" = 1'-0"

LEGEND:

Indicates non shrink grout

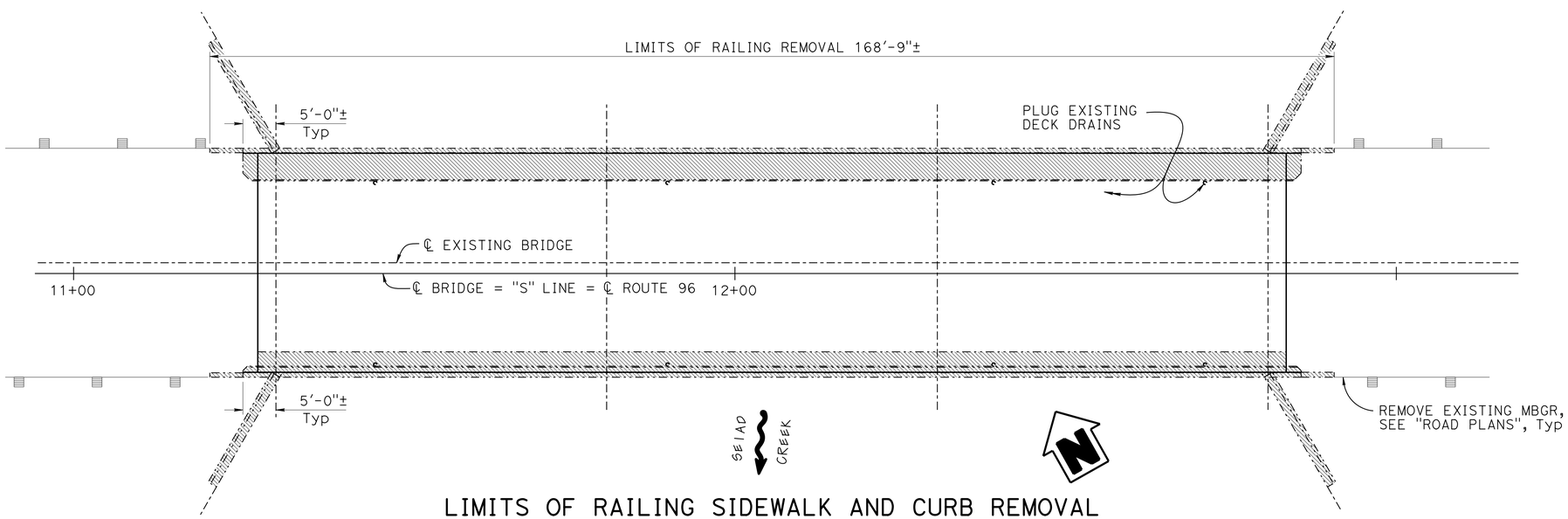

LIMITS OF RAILING SIDEWALK AND CURB REMOVAL

1" = 10'

LEGEND:

Indicates bridge removal portion B

Indicates existing bridge

NOTE:

For details not shown, see "REMOVAL DETAILS NO. 2" sheet

NOTE:
THE CONTRACTOR MUST VERIFY ALL CONTROLLING FIELD DIMENSIONS BEFORE ORDERING OR FABRICATING ANY MATERIAL.

	BY	CHECKED
DESIGN	Quang Nguyen	Eric Burgeson
DETAILS	Jay Reid	Eric Burgeson
QUANTITIES	Mufeed Khalaf	Shadi Motalebi

STATE OF CALIFORNIA
DEPARTMENT OF TRANSPORTATION

DIVISION OF ENGINEERING SERVICES
STRUCTURE DESIGN
DESIGN BRANCH 3

BRIDGE NO. 02-0072
POST MILE 60.17

SEIAD CREEK BRIDGE (WIDEN)
BRIDGE REMOVAL (PORTION) NO. 1

STRUCTURES DESIGN DETAIL SHEET (ENGLISH) (REV. 09-01-10)

ORIGINAL SCALE IN INCHES FOR REDUCED PLANS 0 1 2 3

UNIT: 3578
PROJECT NUMBER & PHASE: 02120000121
CONTRACT NO.: 02-4E6504

DISREGARD PRINTS BEARING EARLIER REVISION DATES

REVISION DATES: 2-18-15 4-17-15 6-18-15 5-23-16

SHEET 18 OF 32

FILE => 02-0072-s-removal01.dgn

USERNAME => s115152 DATE PLOTTED => 23-AUG-2016 TIME PLOTTED => 06:20

DIST	COUNTY	ROUTE	POST MILES TOTAL PROJECT	SHEET No.	TOTAL SHEETS
02	Sis	96	R52.5/88.4	161	208

Mufeed Khalaf 5/27/16
REGISTERED CIVIL ENGINEER DATE

06-15-16
PLANS APPROVAL DATE

REGISTERED PROFESSIONAL ENGINEER
Mufeed Khalaf
No. 54260
Exp. 12-31-17
CIVIL
STATE OF CALIFORNIA

The State of California or its officers or agents shall not be responsible for the accuracy or completeness of scanned copies of this plan sheet.

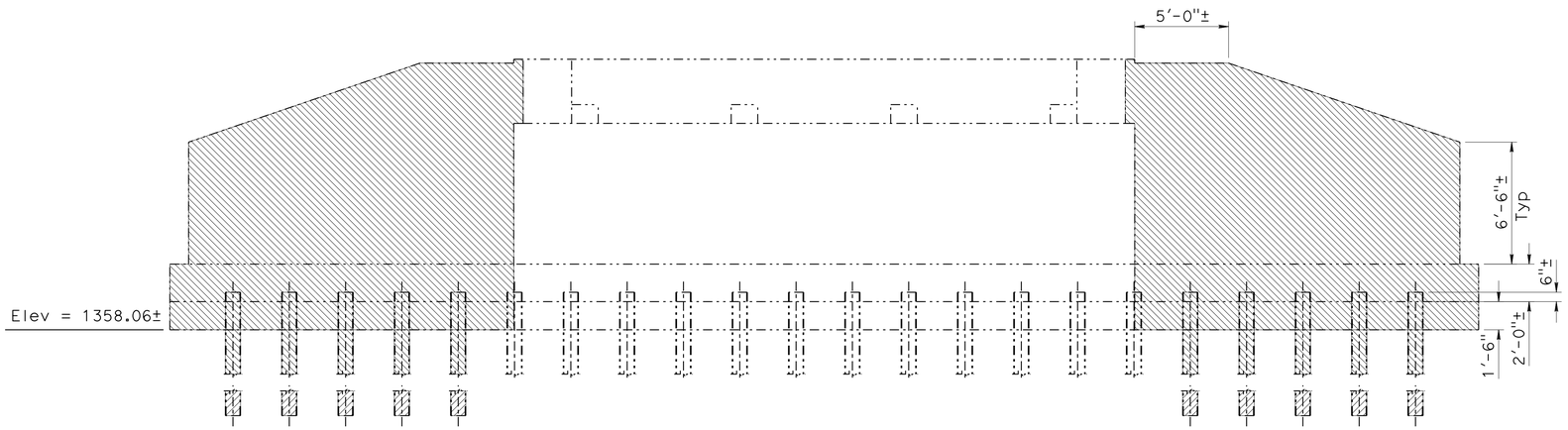

NOTE:
Existing pile tip Elevation = 1346.06±

ABUTMENT REMOVAL (ELEVATION)
1/4" = 1'-0"

LEGEND:

-·-·- Indicates existing structure

Indicates bridge removal (portion), location B

NOTE:
Abutment 1 shown, Abutment 4 similar

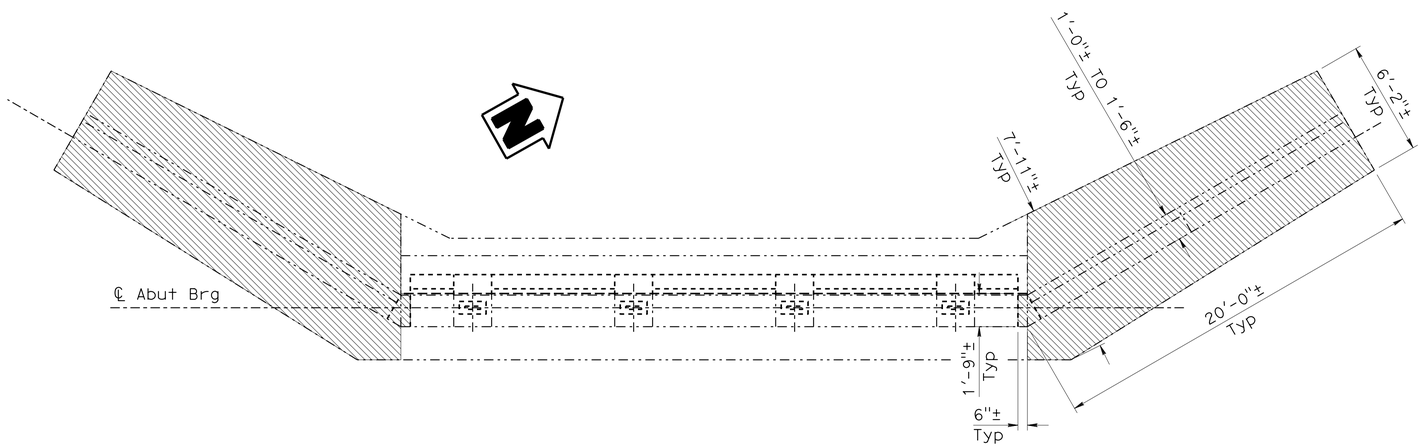

ABUTMENT REMOVAL (PLAN)
1/4" = 1'-0"

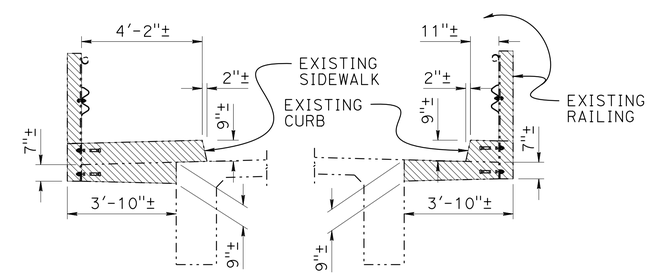

OVERHANG REMOVAL
3/8" = 1'-0"

NOTE:
THE CONTRACTOR MUST VERIFY ALL CONTROLLING FIELD DIMENSIONS BEFORE ORDERING OR FABRICATING ANY MATERIAL.

	BY	CHECKED
DESIGN	Quang Nguyen	Eric Burgeson
DETAILS	Jay Reid	Eric Burgeson
QUANTITIES	Mufeed Khalaf	Shadi Motalebi

STATE OF CALIFORNIA
DEPARTMENT OF TRANSPORTATION

DIVISION OF ENGINEERING SERVICES
STRUCTURE DESIGN
DESIGN BRANCH 3

BRIDGE NO. 02-0072
POST MILE 60.17

SEIAD CREEK BRIDGE (WIDEN)
BRIDGE REMOVAL (PORTION) NO. 2

STRUCTURES DESIGN DETAIL SHEET (ENGLISH) (REV. 09-01-10)

ORIGINAL SCALE IN INCHES FOR REDUCED PLANS 0 1 2 3

UNIT: 3578
PROJECT NUMBER & PHASE: 02120000121
CONTRACT NO.: 02-4E6504

DISREGARD PRINTS BEARING EARLIER REVISION DATES

REVISION DATES 2-18-15 4-17-15 6-18-15 5-23-16

SHEET 19 OF 32

FILE => 02-0072-s-removal02.dgn

USERNAME => s115152 DATE PLOTTED => 23-AUG-2016 TIME PLOTTED => 06:20

DIST	COUNTY	ROUTE	POST MILES TOTAL PROJECT	SHEET No.	TOTAL SHEETS
02	Sis	96	R52.5/88.4	162	208

Mufeed Khalaf 5/27/16
REGISTERED CIVIL ENGINEER DATE

06-15-16
PLANS APPROVAL DATE

REGISTERED PROFESSIONAL ENGINEER Mufeed Khalaf No. 54260 Exp. 12-31-17 CIVIL STATE OF CALIFORNIA

The State of California or its officers or agents shall not be responsible for the accuracy or completeness of scanned copies of this plan sheet.

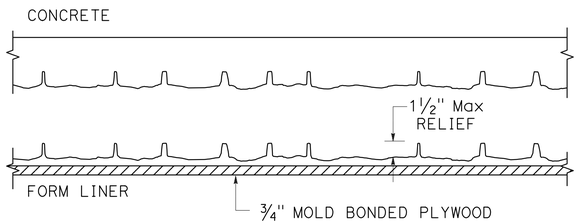

EXTERIOR SECTION A-A
NO SCALE

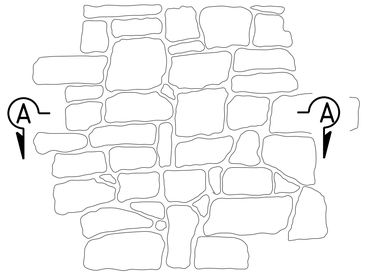

PATTERN ELEVATION
NO SCALE

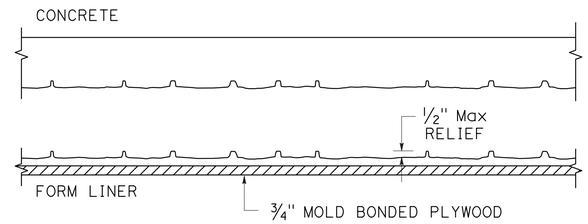

INTERIOR SECTION A-A
NO SCALE

RANDOM ROUGH STACKED ROCK TEXTURE DETAILS
NO SCALE

TEXTURE NOTES:

1. The contractor shall verify all controlling dimensions and field conditions prior to ordering or fabricating any materials or assemblies for construction
2. RANDOM ROUGH STACKED ROCK TEXTURE:
   Texture relief to be ½" maximum at interior pattern
   Stone sizes shall be random
   2½" to 18" in width
   2" to 12" in height
3. RANDOM ROUGH STACKED ROCK TEXTURE:
   Texture relief to be 1½" maximum at exterior pattern
   Stone sizes shall be random
   2½" to 18" in width
   2" to 12" in height

NOTES:

1. Barrier concrete and wingwall surface textures to have stain applied after construction
2. For "DETAIL A" and "DETAIL B", see "CONCRETE SURFACE TEXTURE Det No. 2" sheet
3. For rail details not shown, see "CALIFORNIA ST-70 BRIDGE RAIL", "DETAIL No. 1" thru "DETAILS No. 4" sheets

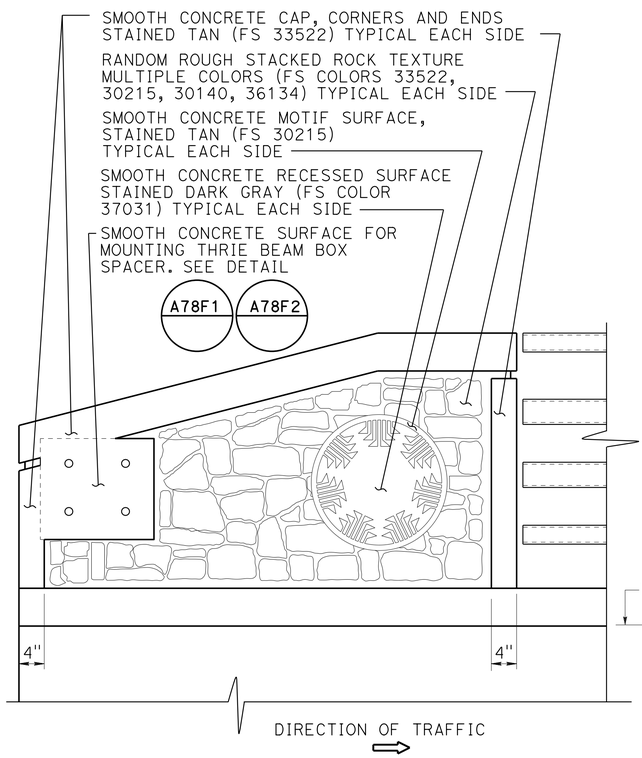

NOTE:
Tapered end block at both ends of barrier

EXTERIOR ELEVATION
1" = 1'-0"

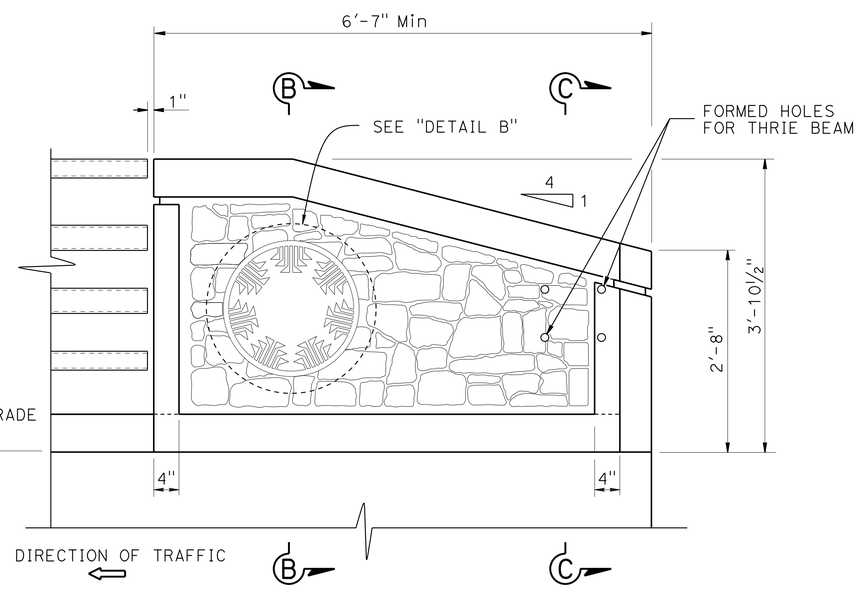

INTERIOR ELEVATION
1" = 1'-0"

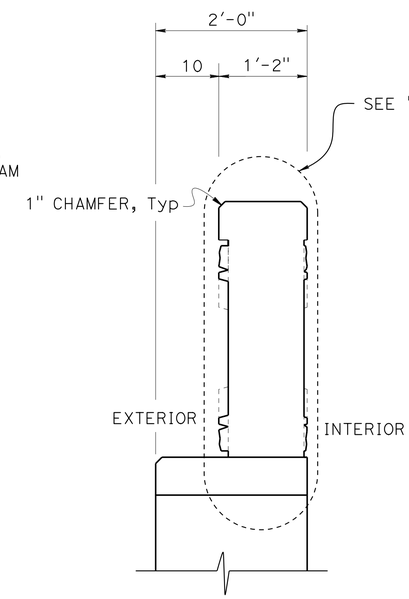

SECTION B-B
1" = 1'-0"

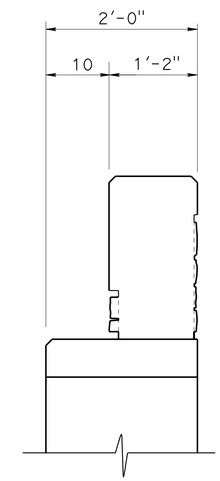

SECTION C-C
1" = 1'-0"

	BY	CHECKED
DESIGN	Stephan D Heath	Quincy Wong
DETAILS	Nancy C Gwynn	Quincy Wong
QUANTITIES	Mufeed Khalaf	Shadi Motalebi

STATE OF CALIFORNIA
DEPARTMENT OF TRANSPORTATION

DIVISION OF ENGINEERING SERVICES
STRUCTURE DESIGN
DESIGN BRANCH 3

BRIDGE NO. 02-0072
POST MILE 60.17

SEIAD CREEK BRIDGE (WIDEN)
CONCRETE SURFACE TEXTURE Det No. 1

STRUCTURES DESIGN DETAIL SHEET (ENGLISH) (REV. 09-01-10)

ORIGINAL SCALE IN INCHES FOR REDUCED PLANS 0 1 2 3

UNIT: 3578
PROJECT NUMBER & PHASE: 02120000121
CONTRACT NO.: 02-4E6504

DISREGARD PRINTS BEARING EARLIER REVISION DATES

REVISION DATES: 12-31-14 12-4-15 4-19-16

SHEET 20 OF 32

FILE => 02-0072-u-arch01.dgn

USERNAME => s115152 DATE PLOTTED => 23-AUG-2016 TIME PLOTTED => 08:21

DIST	COUNTY	ROUTE	POST MILES TOTAL PROJECT	SHEET No.	TOTAL SHEETS
02	Sis	96	R52.5/88.4	163	208

Mufeed Khalaf 5/27/16
REGISTERED CIVIL ENGINEER DATE

06-15-16
PLANS APPROVAL DATE

REGISTERED PROFESSIONAL ENGINEER Mufeed Khalaf No. 54260 Exp. 12-31-17 CIVIL STATE OF CALIFORNIA

The State of California or its officers or agents shall not be responsible for the accuracy or completeness of scanned copies of this plan sheet.

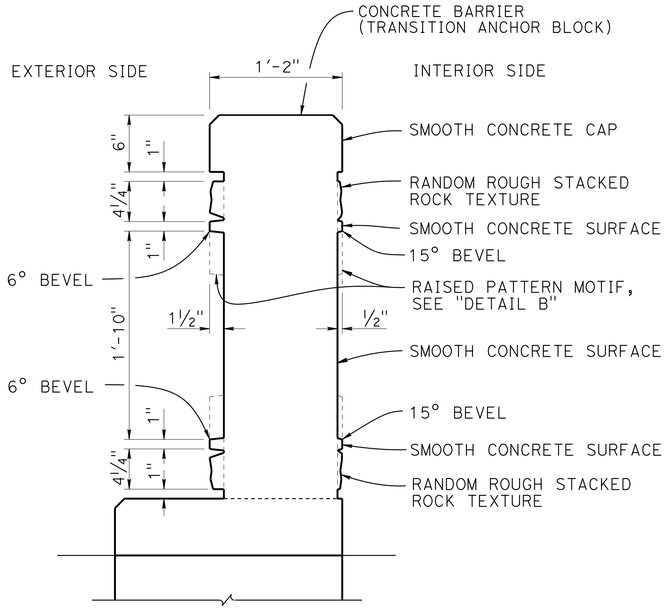

DETAIL A
1½" = 1'-0"

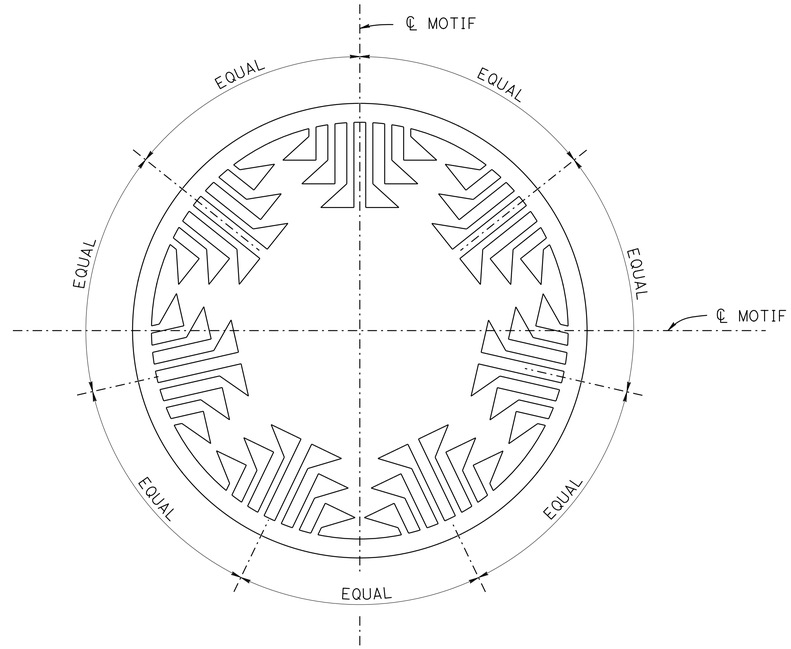

DETAIL B
3" = 1'-0"

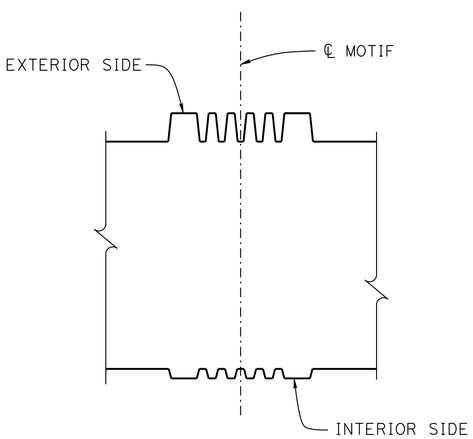

SECTION E-E
3" = 1'-0"

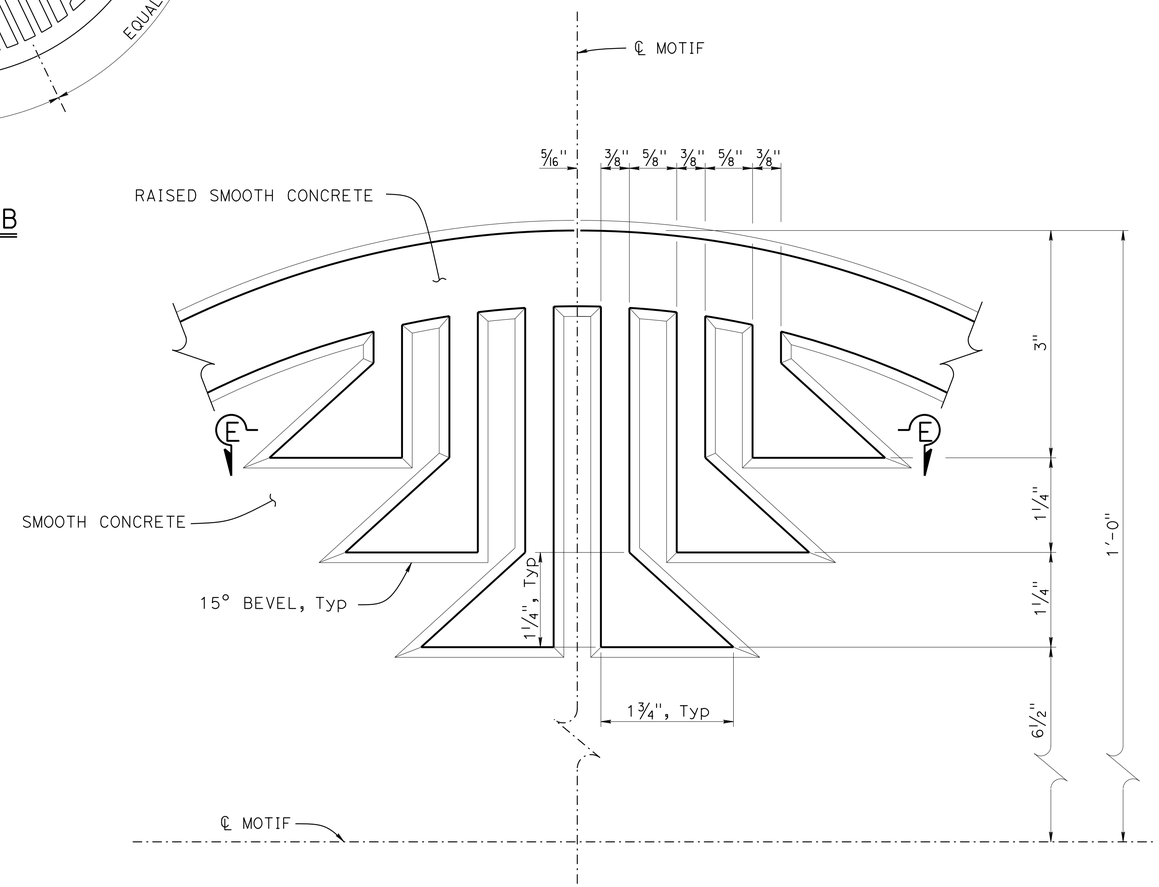

PART DETAIL B
FULL SCALE

DESIGN	BY Stephan D Heath	CHECKED Quincy Wong	
DETAILS	BY Nancy Gwynn	CHECKED Quincy Wong	
QUANTITIES	BY Mufeed Khalaf	CHECKED Shadi Motalebi	

STATE OF CALIFORNIA
DEPARTMENT OF TRANSPORTATION

DIVISION OF ENGINEERING SERVICES
STRUCTURE DESIGN
DESIGN BRANCH 3

BRIDGE NO. 02-0072
POST MILE 60.17

SEIAD CREEK BRIDGE (WIDEN)
CONCRETE SURFACE TEXTURE Det No. 2

STRUCTURES DESIGN DETAIL SHEET (ENGLISH) (REV. 09-01-10)

ORIGINAL SCALE IN INCHES FOR REDUCED PLANS 0 1 2 3

UNIT: 3578
PROJECT NUMBER & PHASE: 02120000121
CONTRACT NO.: 02-4E6504

DISREGARD PRINTS BEARING EARLIER REVISION DATES

REVISION DATES 12-2-14 12-2-15 4-19-16

SHEET 21 OF 32

FILE => 02-0072-u-arch02.dgn

USERNAME => s175152 DATE PLOTTED => 23-AUG-2016 TIME PLOTTED => 06:21

DIST	COUNTY	ROUTE	POST MILES TOTAL PROJECT	SHEET No.	TOTAL SHEETS
02	Sis	96	R52.5/88.4	164	208

Mufeed Khalaf 5/27/16
REGISTERED CIVIL ENGINEER DATE

06-15-16
PLANS APPROVAL DATE

REGISTERED PROFESSIONAL ENGINEER
Mufeed Khalaf
No. 54260
Exp. 12-31-17
CIVIL
STATE OF CALIFORNIA

The State of California or its officers or agents shall not be responsible for the accuracy or completeness of scanned copies of this plan sheet.

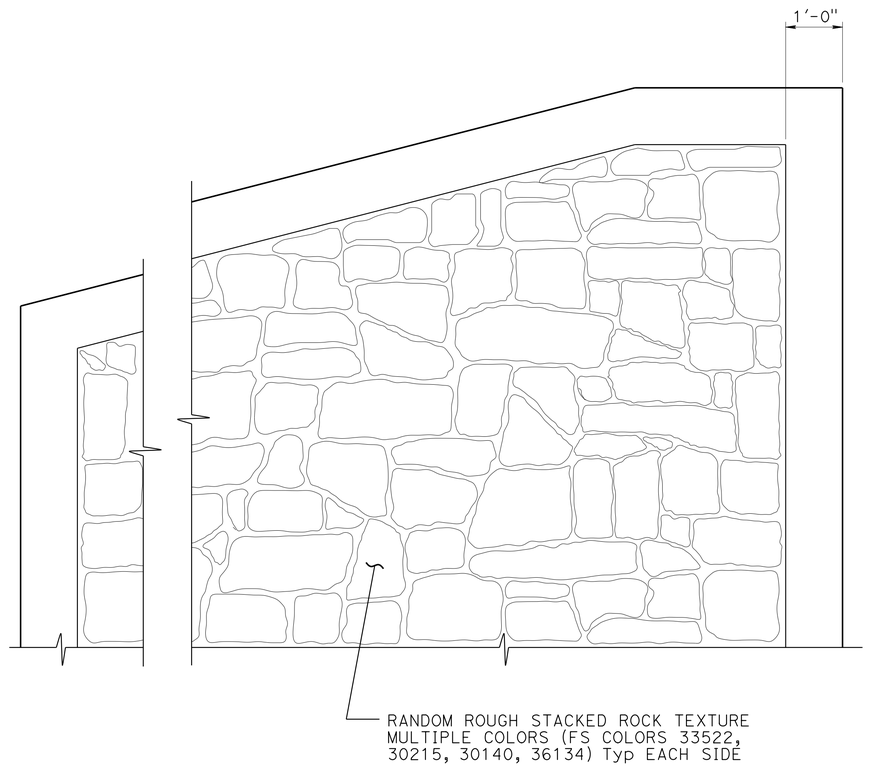

PARTIAL WINGWALL ELEVATION

3/4" = 1'-0"

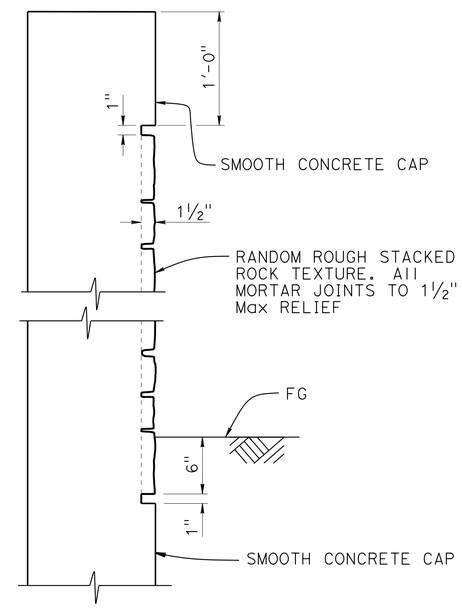

WINGWALL SECTION

1 1/2" = 1'-0"

DESIGN	BY Stephan D Heath	CHECKED Quincy Wong	
DETAILS	BY Nancy C Gwynn	CHECKED Quincy Wong	
QUANTITIES	BY Mufeed Khalaf	CHECKED Shadi Motalebi	

STATE OF CALIFORNIA
DEPARTMENT OF TRANSPORTATION

DIVISION OF ENGINEERING SERVICES
STRUCTURE DESIGN
DESIGN BRANCH 3

BRIDGE NO. 02-0072
POST MILE 60.17

SEIAD CREEK BRIDGE (WIDEN)
CONCRETE SURFACE TEXTURE Det No. 3

STRUCTURES DESIGN DETAIL SHEET (ENGLISH) (REV. 09-01-10)

ORIGINAL SCALE IN INCHES FOR REDUCED PLANS 0 1 2 3

UNIT: 3578
PROJECT NUMBER & PHASE: 02120000121
CONTRACT NO.: 02-4E6504

DISREGARD PRINTS BEARING EARLIER REVISION DATES

REVISION DATES 12-31-14 12-31-15 4-19-16

SHEET 22 OF 32

FILE => 02-0072-u-arch03.dgn

USERNAME => s115152 DATE PLOTTED => 23-AUG-2016 TIME PLOTTED => 06:21

DIST	COUNTY	ROUTE	POST MILES TOTAL PROJECT	SHEET No.	TOTAL SHEETS
02	Sis	96	R52.5/88.4	165	208

Mufeed Khalaf 5/27/16
REGISTERED CIVIL ENGINEER DATE

06-15-16
PLANS APPROVAL DATE

REGISTERED PROFESSIONAL ENGINEER
Mufeed Khalaf
No. 54260
Exp. 12-31-17
CIVIL
STATE OF CALIFORNIA

The State of California or its officers or agents shall not be responsible for the accuracy or completeness of scanned copies of this plan sheet.

LEGEND:

25% CONCRETE STAIN
FEDERAL STANDARD 595C #30140
(DARK BROWN)

25% CONCRETE STAIN
FEDERAL STANDARD 595C #30215
(RED BROWN)

25% CONCRETE STAIN
FEDERAL STANDARD 595C #33522
(MEDIUM TAN)

25% CONCRETE STAIN
FEDERAL STANDARD 595C #36134
(MEDIUM DARK GRAY)

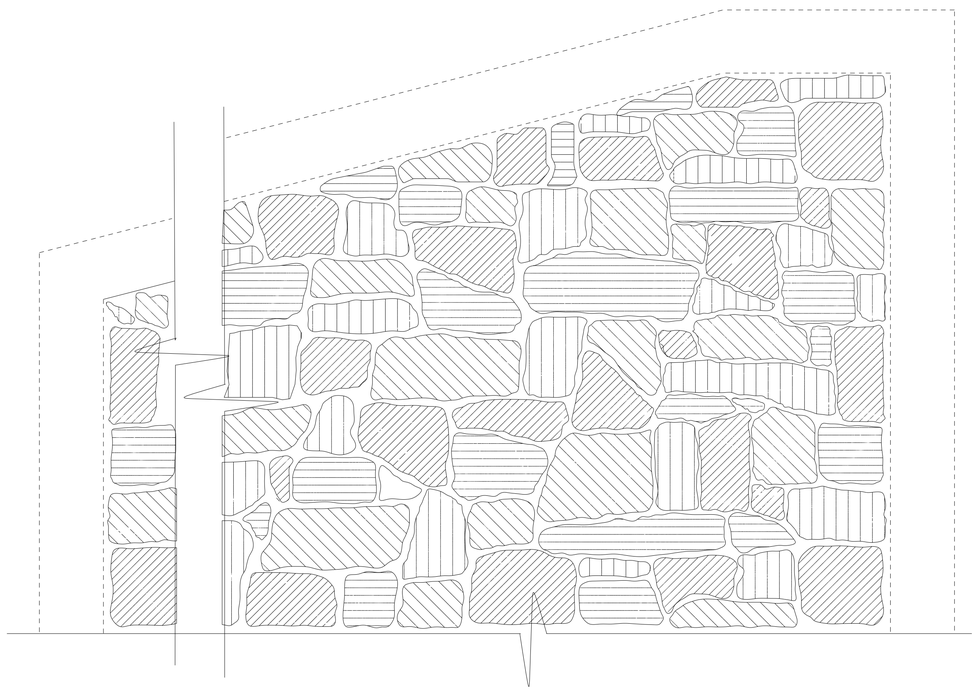

PARTIAL WINGWALL ELEVATION

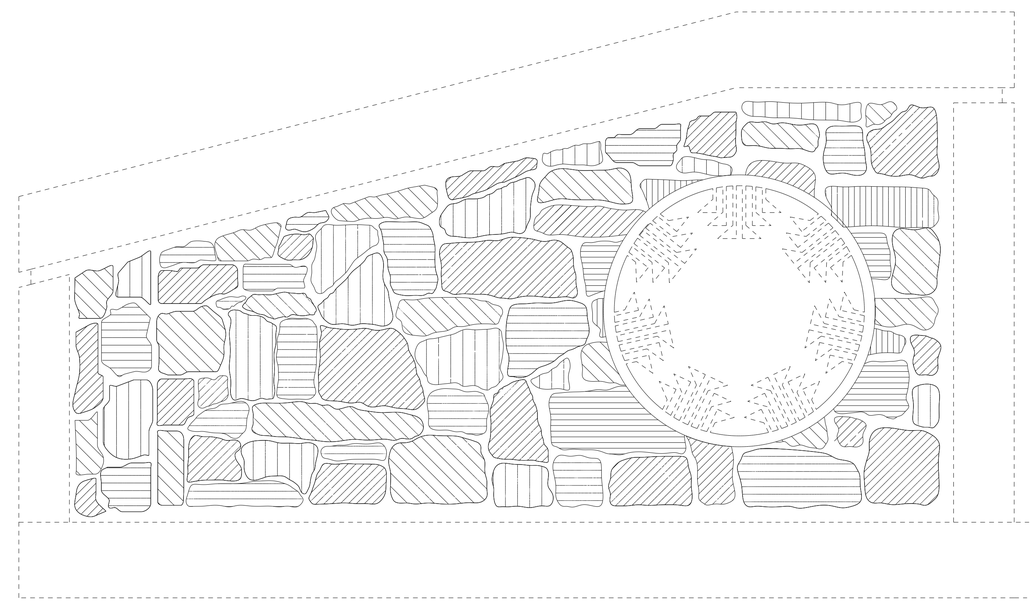

BARRIER ELEVATION

DESIGN	BY Stephan D Heath	CHECKED Quincy Wong
DETAILS	BY Nancy C Gwynn	CHECKED Quincy Wong
QUANTITIES	BY Mufeed Khalaf	CHECKED Shadi Motalebi

STATE OF CALIFORNIA
DEPARTMENT OF TRANSPORTATION

DIVISION OF ENGINEERING SERVICES
STRUCTURE DESIGN
DESIGN BRANCH 3

BRIDGE NO. 02-0072
POST MILE 60.17

SEIAD CREEK BRIDGE (WIDEN)
CONCRETE SURFACE TEXTURE Det No. 4

STRUCTURES DESIGN DETAIL SHEET (ENGLISH) (REV. 09-01-10)

ORIGINAL SCALE IN INCHES FOR REDUCED PLANS 0 1 2 3

UNIT: 3578
PROJECT NUMBER & PHASE: 02120000121
CONTRACT NO.: 02-4E6504

DISREGARD PRINTS BEARING EARLIER REVISION DATES

REVISION DATES 12-1-14 12-1-15 4-19-16

SHEET 23 OF 32

FILE => 02-0072-u-arch04.dgn

USERNAME => s115152 DATE PLOTTED => 23-AUG-2016 TIME PLOTTED => 06:21

DIST	COUNTY	ROUTE	POST MILES TOTAL PROJECT	SHEET No.	TOTAL SHEETS
02	Sis	96	R52.5/88.4	166	208

Mufeed Khalaf 5/27/16
REGISTERED CIVIL ENGINEER DATE

06-15-16
PLANS APPROVAL DATE

REGISTERED PROFESSIONAL ENGINEER Mufeed Khalaf No. 54260 Exp. 12-31-17 CIVIL STATE OF CALIFORNIA

The State of California or its officers or agents shall not be responsible for the accuracy or completeness of scanned copies of this plan sheet.

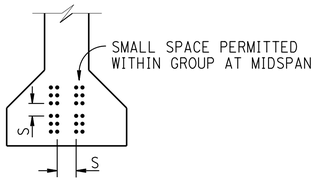

CLEARANCES FOR PRETENSIONED STRANDS

1. Strands may be bundled in groups consisting of 3 vertically, 2 horizontally and separated at the ends
2. The Min distance "S" between groups or individual strands is 1½" for ⅜" ø strands, 1¾" for ½" ø strands, 2" for 0.6" ø strands
3. "S" is measured between centers of adjacent strands
4. Approval by the Engineer is required for deviation

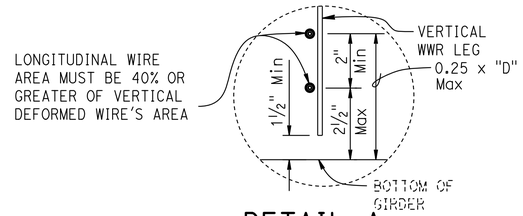

DETAIL A

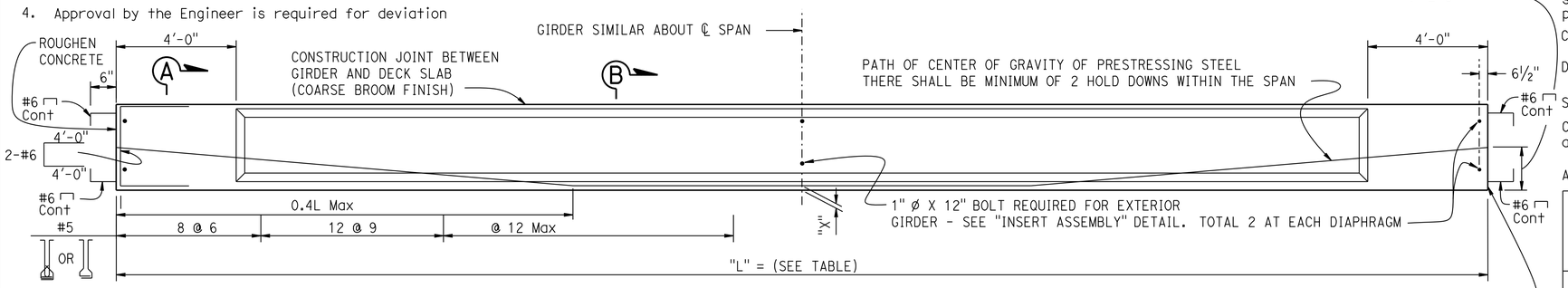

ELEVATION

GENERAL NOTES:

JACKING FORCE (P): The jacking force required at the point of control along the span. The jacking force does not include any fabrication specific losses.
The maximum tensile stress in the prestressing steel upon release shall not exceed 75% of the specified minimum ultimate tensile strength of the prestressing steel.

The maximum temporary tensile stress (jacking stress) in the prestressing steel shall not exceed 80% of the specified minimum ultimate tensile strength of the prestressing steel.

CONCRETE STRENGTH: f'ci is at time of initial stressing
f'c is at 28 days

DEFLECTION COMPONENTS: Informational - to be used in setting screed line elevations

Screed line elevations for deck concrete will be determined by the Engineer.

Contractor may interpolate "P" and "X" values between limits shown, as approved by the Engineer.

All reinforcement must be epoxy coated

Girder location or designation and length	Jacking Force (P) (Kips) "X"		"Y" (in)	Concrete Strength (ksi) f'ci	Concrete Strength (ksi) f'c	Midspan Dead Load Deflection (inches) Deck	Midspan Dead Load Deflection (inches) Rail
A: 49'-11"	4"	480	16	5	6	1/3	1/32
	6"	500					
B: 49'-4"	4"	480	16	5	6		
	6"	500					

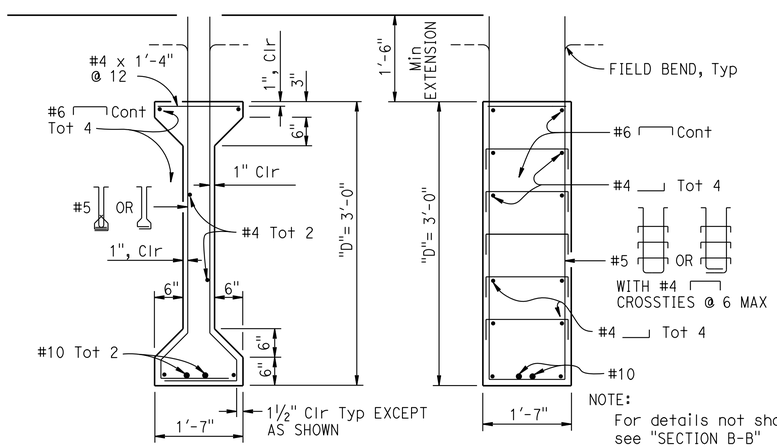

NOTE:
For details not shown, see "SECTION B-B"

SECTION B-B

SECTION A-A

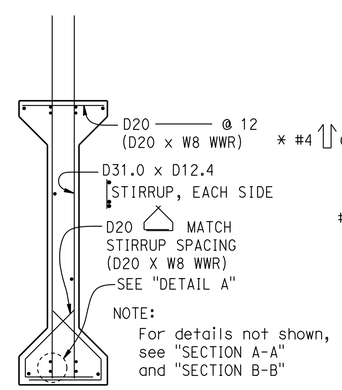

NOTE:
For details not shown, see "SECTION A-A" and "SECTION B-B"

OPTIONAL WELDED WIRE REINFORCEMENT (WWR) DETAIL

WWR NOTE: MANUFACTURER'S SHOP DRAWING SHALL CONFORM TO THE REINFORCEMENT SHOWN ON THIS SHEET AS NOTED AND THE SPECIAL PROVISIONS

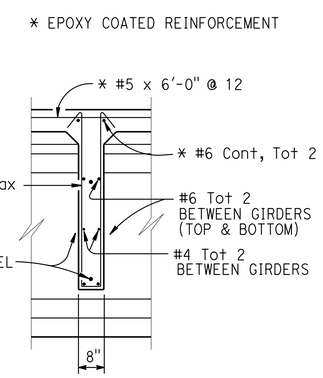

SECTION E-E

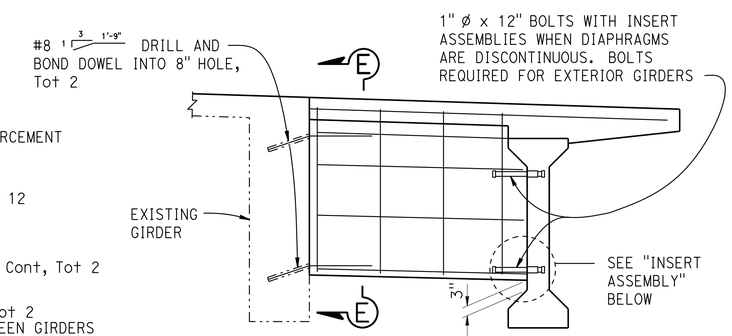

INTERMEDIATE DIAPHRAGM

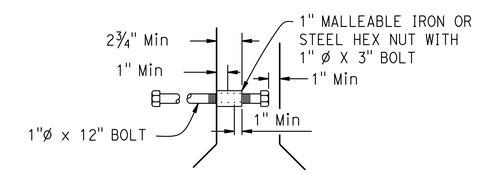

INSERT ASSEMBLY

NOTE:
THE CONTRACTOR MUST VERIFY ALL CONTROLLING FIELD DIMENSIONS BEFORE ORDERING OR FABRICATING ANY MATERIAL.

NO SCALE

	BY	CHECKED
DESIGN	Quang Nguyen	Eric Burgeson
DETAILS	Jay Reid	Eric Burgeson
QUANTITIES	Mufeed Khalaf	Shadi Motalebi

STATE OF CALIFORNIA
DEPARTMENT OF TRANSPORTATION

DIVISION OF ENGINEERING SERVICES
STRUCTURE DESIGN
DESIGN BRANCH 3

BRIDGE NO. 02-0072
POST MILE 60.17

SEIAD CREEK BRIDGE (WIDEN)
PRECAST PRESTRESSED I GIRDER

STRUCTURES DESIGN DETAIL SHEET (ENGLISH) (REV. 09-01-10)

ORIGINAL SCALE IN INCHES FOR REDUCED PLANS 0 1 2 3

UNIT: 3578
PROJECT NUMBER & PHASE: 02120000121
CONTRACT NO.: 02-4E6504

DISREGARD PRINTS BEARING EARLIER REVISION DATES

REVISION DATES 2-14-15 4-17-15 6-16-15 5-23-16

SHEET 24 OF 32

FILE => 02-0072-x-lgdr.dgn

USERNAME => s115152 DATE PLOTTED => 23-AUG-2016 TIME PLOTTED => 06:21

DIST	COUNTY	ROUTE	POST MILES TOTAL PROJECT	SHEET No.	TOTAL SHEETS
02	Sis	96	R52.5/88.4	167	208

Mufeed Khalaf 5/27/16
REGISTERED CIVIL ENGINEER DATE

06-15-16
PLANS APPROVAL DATE

REGISTERED PROFESSIONAL ENGINEER Mufeed Khalaf No. 54260 Exp. 12-31-17 CIVIL STATE OF CALIFORNIA

The State of California or its officers or agents shall not be responsible for the accuracy or completeness of electronic copies of this plan sheet.

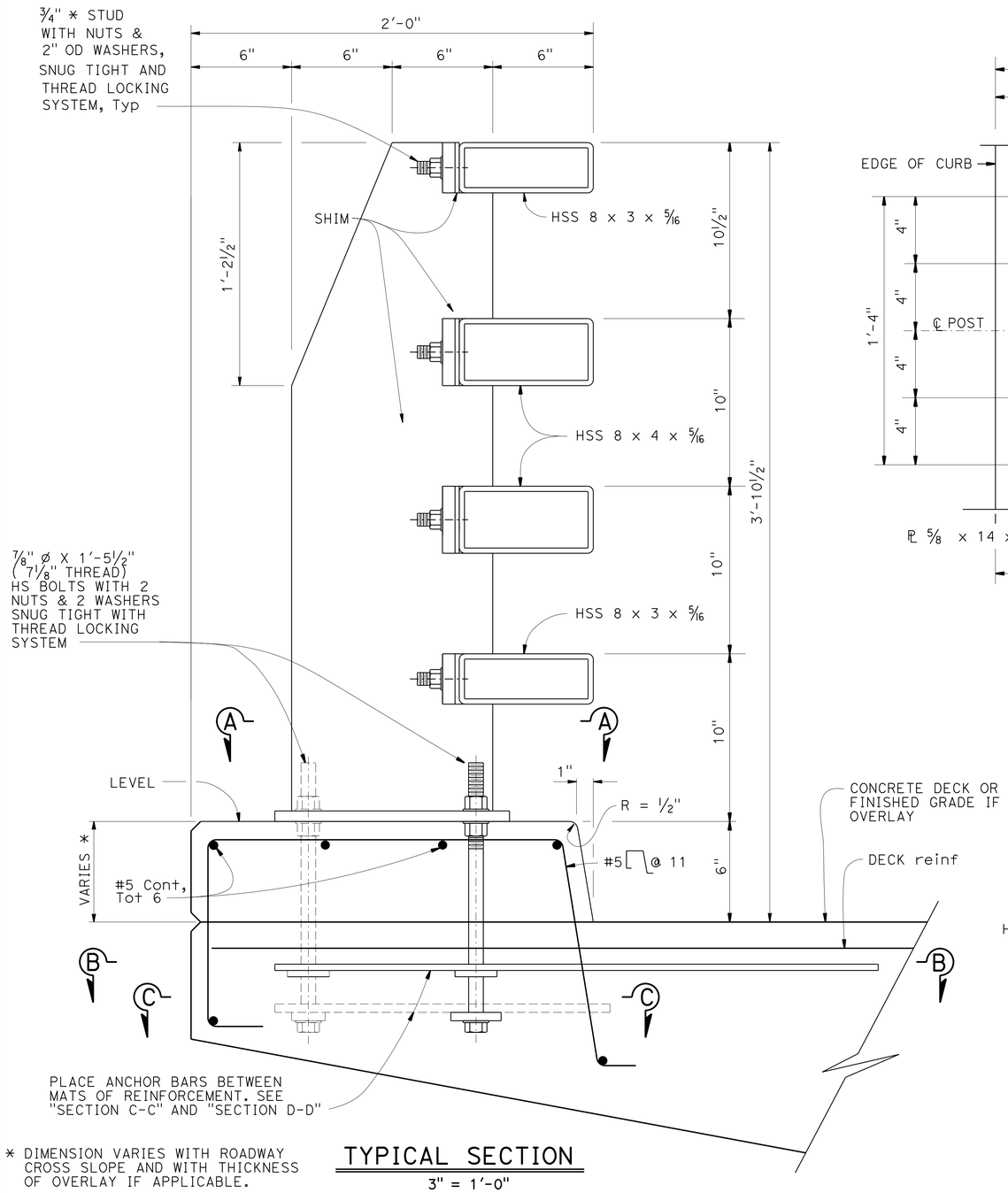

⁎ DIMENSION VARIES WITH ROADWAY CROSS SLOPE AND WITH THICKNESS OF OVERLAY IF APPLICABLE.

TYPICAL SECTION
3" = 1'-0"

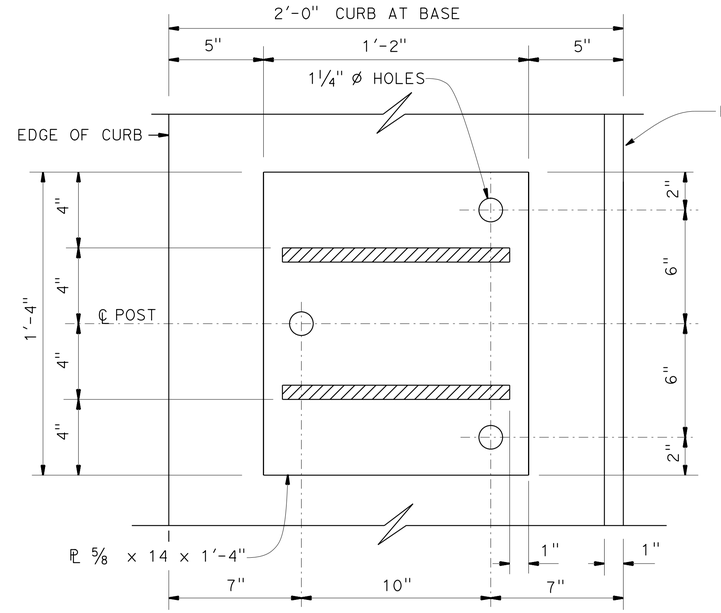

SECTION A-A
3' = 1'-0"

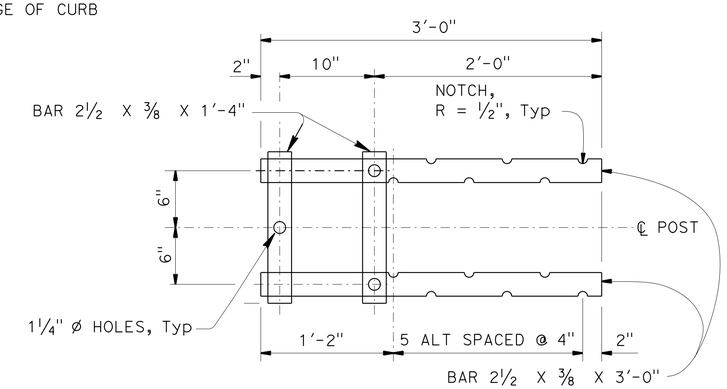

SECTION B-B
1½" = 1'-0"

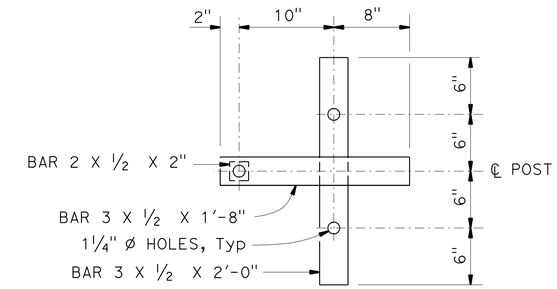

SECTION C-C
1½" = 1'-0"

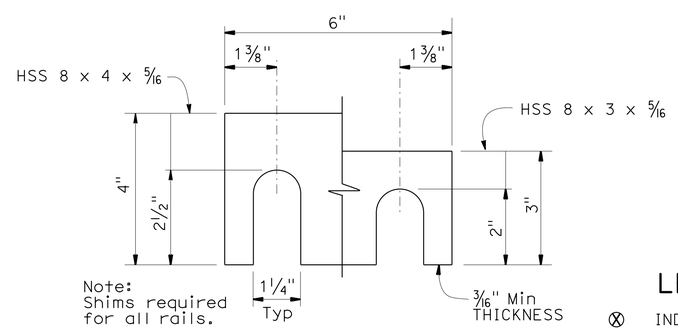

Note: Shims required for all rails.

SHIM DETAIL
6" = 1'-0"

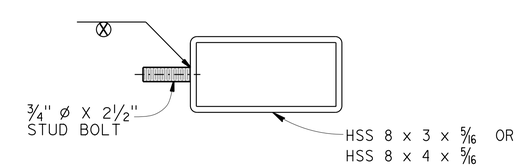

SECTION AT POST
3" = 1'-0"

LEGEND:

⊗ INDICATES STUD WELD

STANDARD DRAWING		
FILE NO. xs16-130-1	APPROVAL DATE January 2015	The components of this Bridge Standard Drawing have been prepared under the responsible charge of the Technical Owner, a registered civil engineer in the State of California. Refer to: http//www.dot.ca.gov/hq/esc/techpubs/manual/bridgemanuals/bridge-standard-detail-sheet/index.html. The selection and proper application of the component design and any modifications shown have been prepared under the responsible charge of the registered civil engineer for the project.

STATE OF CALIFORNIA
DEPARTMENT OF TRANSPORTATION

DIVISION OF ENGINEERING SERVICES

BRIDGE NO. 02-0072
POST MILE 60.17

SEIAD CREEK BRIDGE (WIDEN)
CALIFORNIA ST-70 BRIDGE RAIL
DETAILS No. 1

DS OSD 2147A (ENGLISH STANDARD DRAWING "XS" BORDER REV. (02-02-11)

ORIGINAL SCALE IN INCHES FOR REDUCED PLANS 0 1 2 3

UNIT: 3578
PROJECT NUMBER & PHASE: 02120000121
CONTRACT NO.: 02-4E6504

DISREGARD PRINTS BEARING EARLIER REVISION DATES →

REVISION DATES 6-14-14 12-19-14 1-14-15

SHEET 25 OF 32

FILE => 02-0072-x-st-70-01.dgn

USERNAME => s115152 DATE PLOTTED => 23-AUG-2016 TIME PLOTTED => 06:21

DIST	COUNTY	ROUTE	POST MILES TOTAL PROJECT	SHEET No.	TOTAL SHEETS
02	Sis	96	R52.5/88.4	168	208

Mufeed Khalaf 5/27/16
REGISTERED CIVIL ENGINEER DATE

06-15-16
PLANS APPROVAL DATE

REGISTERED PROFESSIONAL ENGINEER Mufeed Khalaf No. 54260 Exp. 12-31-17 CIVIL STATE OF CALIFORNIA

The State of California or its officers or agents shall not be responsible for the accuracy or completeness of electronic copies of this plan sheet.

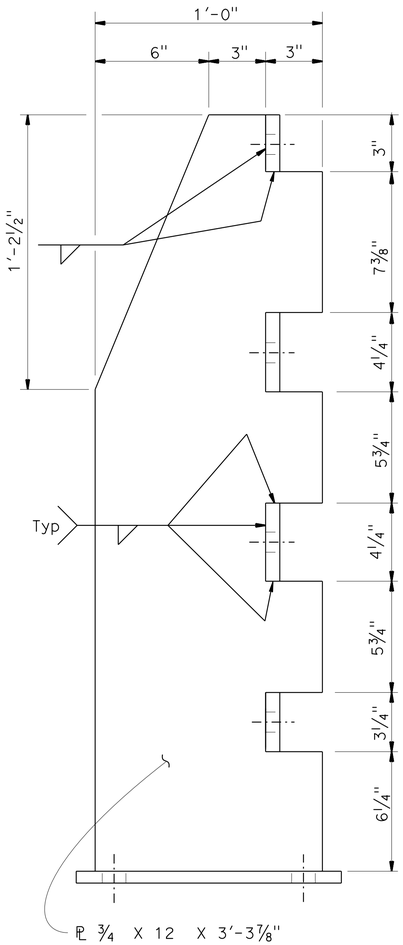

SECTION D-D

3" = 1'-0"

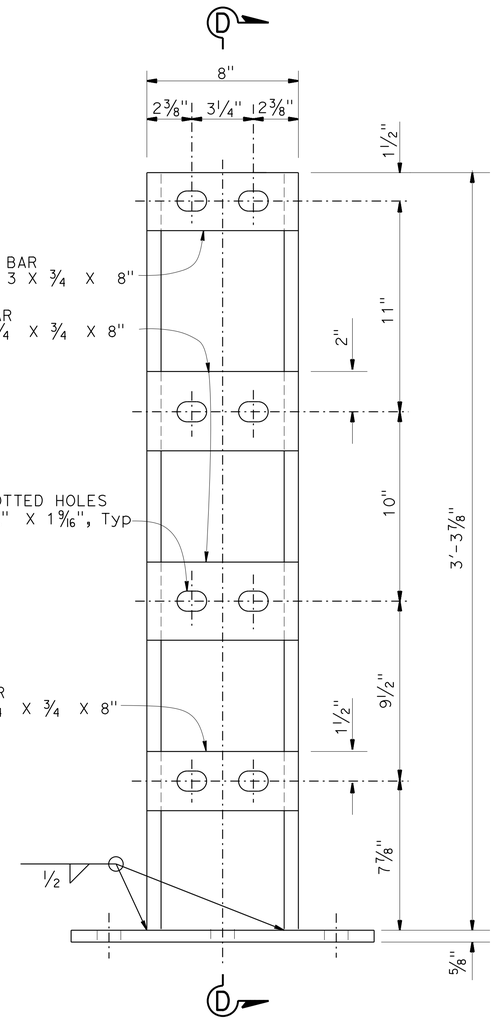

ELEVATION

3" = 1'-0"

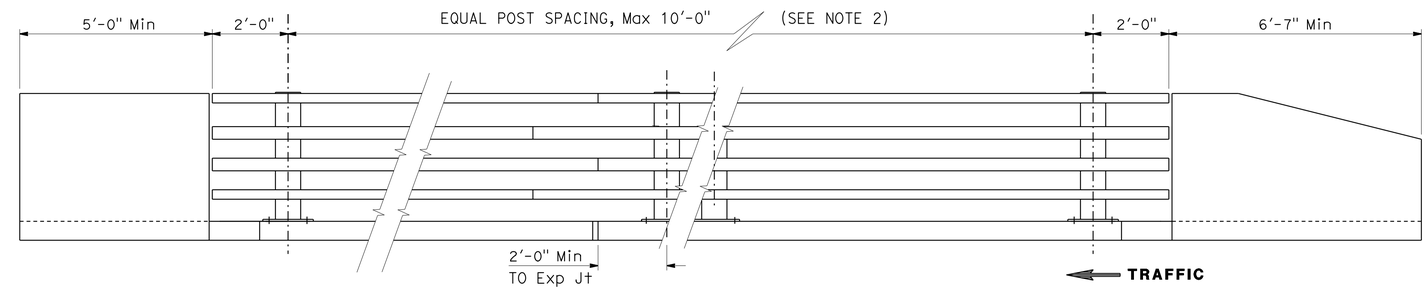

ELEVATION

½" = 1'-0"

NOTES:

1. For approach and departure end details, see "DETAILS No. 3" sheet.
2. Post spacing and/or block length to be adjusted to fit bridge length or wingwall length.
3. All horizontal members are parallel to longitudinal profile grade of deck.
4. Posts are normal to profile grade of structure.
5. Posts are vertical to the transverse cross section.

STANDARD DRAWING

FILE NO. xs16-130-2

APPROVAL DATE January 2015

The components of this Bridge Standard Drawing have been prepared under the responsible charge of the Technical Owner, a registered civil engineer in the State of California. Refer to: http://www.dot.ca.gov/hq/esc/techpubs/manual/bridgemanuals/bridge-standard-detail-sheet/index.html. The selection and proper application of the component design and any modifications shown have been prepared under the responsible charge of the registered civil engineer for the project.

STATE OF CALIFORNIA
DEPARTMENT OF TRANSPORTATION

DIVISION OF ENGINEERING SERVICES

BRIDGE NO. 02-0072
POST MILE 60.17

SEIAD CREEK BRIDGE (WIDEN)
CALIFORNIA ST-70 BRIDGE RAIL
DETAILS No. 2

DS OSD 2147A (ENGLISH STANDARD DRAWING "XS" BORDER REV. (02-02-11)

ORIGINAL SCALE IN INCHES FOR REDUCED PLANS 0 1 2 3

UNIT: 3578
PROJECT NUMBER & PHASE: 02120000121
CONTRACT NO.: 02-4E6504

DISREGARD PRINTS BEARING EARLIER REVISION DATES

REVISION DATES: 6-14-14 12-19-14 1-14-15

SHEET 26 OF 32

FILE => 02-0072-x-st-70-02.dgn

USERNAME => s115152 DATE PLOTTED => 23-AUG-2016 TIME PLOTTED => 06:21

DIST	COUNTY	ROUTE	POST MILES TOTAL PROJECT	SHEET No.	TOTAL SHEETS
02	Sis	96	R52.5/88.4	169	208

Mufeed Khalaf 5/27/16
REGISTERED CIVIL ENGINEER DATE

06-15-16
PLANS APPROVAL DATE

REGISTERED PROFESSIONAL ENGINEER Mufeed Khalaf No. 54260 Exp. 12-31-17 CIVIL STATE OF CALIFORNIA

The State of California or its officers or agents shall not be responsible for the accuracy or completeness of electronic copies of this plan sheet.

The components of this Bridge Standard Drawing have been prepared under the responsible charge of the Technical Owner, a registered civil engineer in the State of California. Refer to: http://www.dot.ca.gov/hq/esc/techpubs/manual/bridgemanuals/bridge-standard-detail-sheets/index.html. The selection and proper application of the component design and any modifications shown have been prepared under the responsible charge of the registered civil engineer for the project.

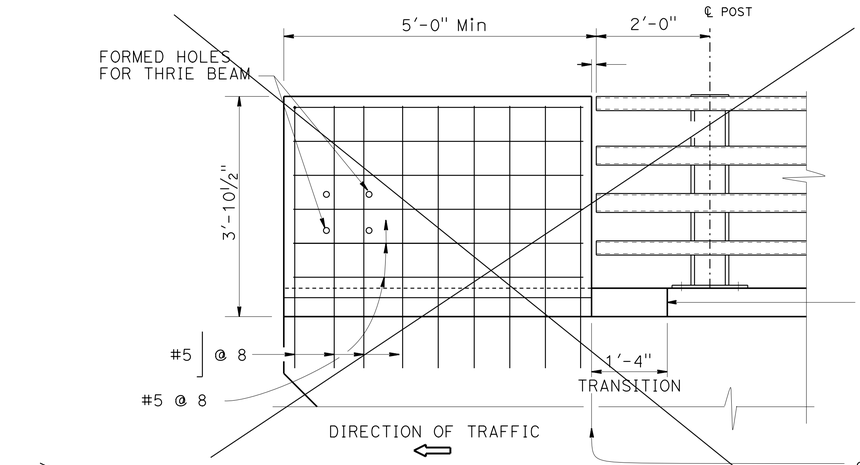

ELEVATION

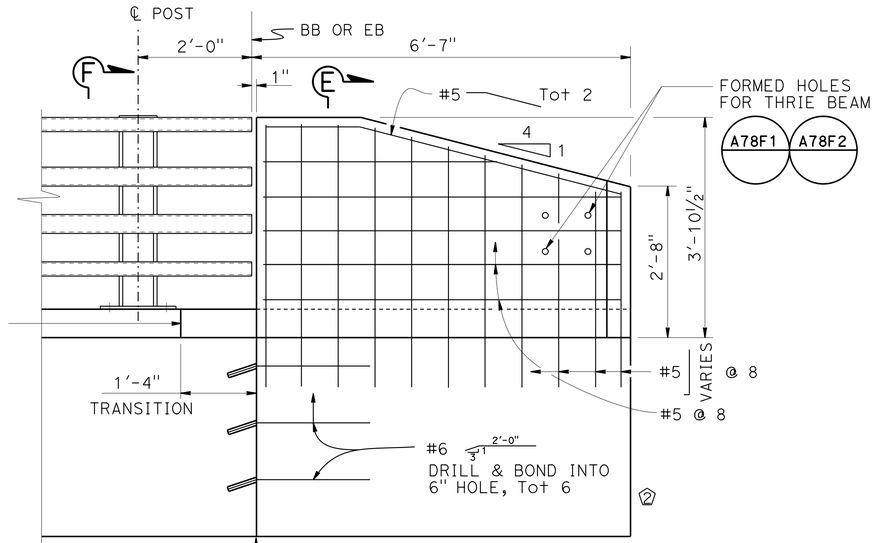

ELEVATION

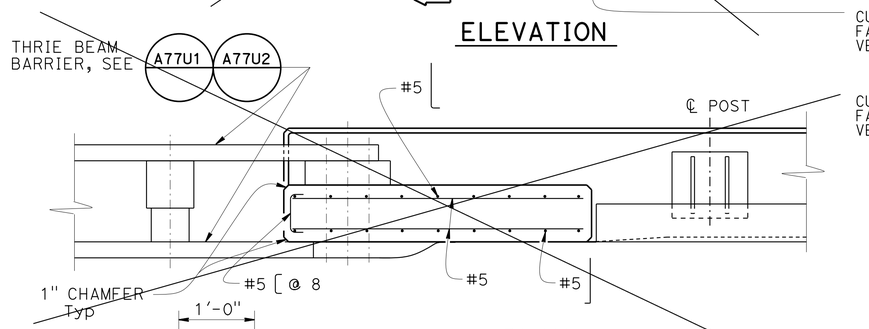

PLAN

① END BLOCK DETAIL
¾" = 1'-0"

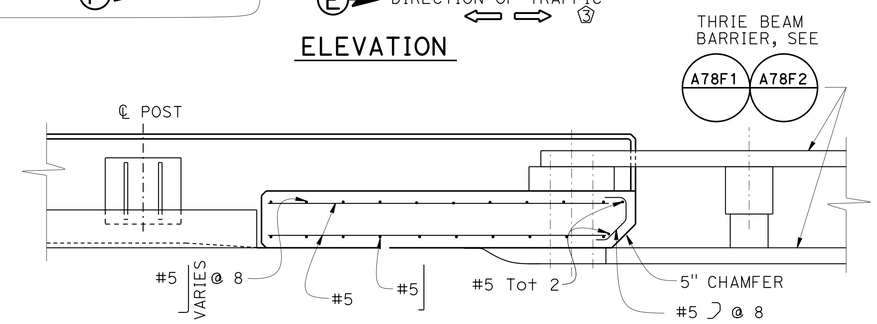

PLAN

TRANSITION BLOCK DETAIL
¾" = 1'-0"

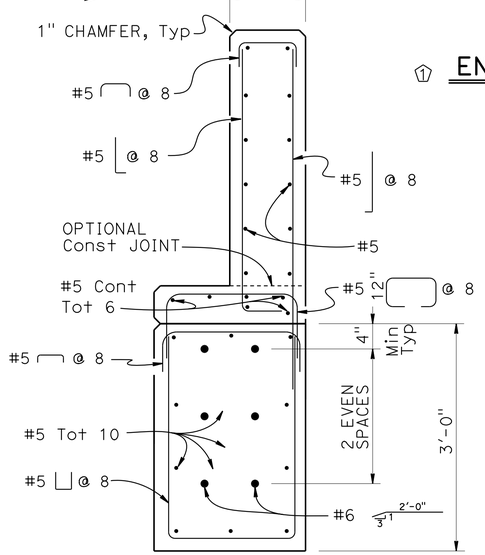

② SECTION E-E
1' = 1'-0"

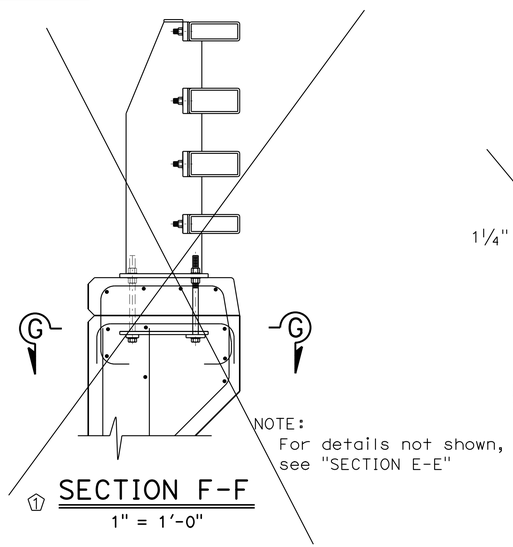

① SECTION F-F
1" = 1'-0"

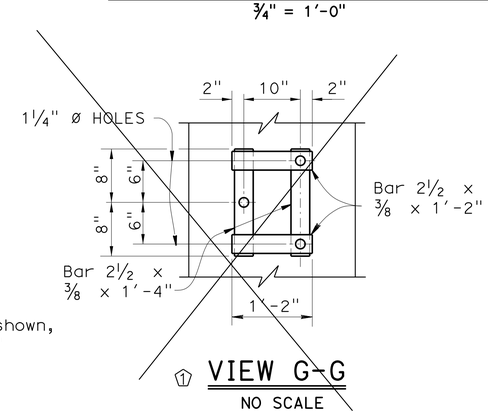

① VIEW G-G
NO SCALE

NOTES:

1. Anchor bolts may be tack welded (shop or field) to anchorage.
2. Each rail length must be continuous over a minimum of two posts.
3. The fabricator must check that the tubular sleeve splices conform to the dimensions indicated to assure proper clearance.
4. Except for expansion splices, not more than one splice permitted per same side of post.

MODIFIED
STANDARD DRAWING
FILE NO. xs16-130-3
APPROVAL DATE January 2015

① REMOVE DETAIL
② ADD GRADE BEAM FOOTING
③ SLOPED TRANSITION AT BOTH ENDS OF TRAFFIC FLOW

STATE OF CALIFORNIA
DEPARTMENT OF TRANSPORTATION

DIVISION OF ENGINEERING SERVICES

BRIDGE NO. 02-0072
POST MILE 62.4

SPECIAL DETAILS
SEIAD CREEK BRIDGE (WIDEN)
CALIFORNIA ST-70 (MOD) BRIDGE RAIL
DETAILS No. 3

DS OSD 2147A (ENGLISH STANDARD DRAWING "XS" BORDER REV. (02-02-11)

ORIGINAL SCALE IN INCHES FOR REDUCED PLANS 0 1 2 3

UNIT: 3578
PROJECT NUMBER & PHASE: 02120000120
CONTRACT NO.: 02-4E654

DISREGARD PRINTS BEARING EARLIER REVISION DATES
REVISION DATES: 6-14-14 12-18-14 1-14-15 11-9-15
SHEET 27 OF 32

FILE => 02-0072-x-st-70-03.dgn

USERNAME => s115152 DATE PLOTTED => 23-AUG-2016 TIME PLOTTED => 06:21

DIST	COUNTY	ROUTE	POST MILES TOTAL PROJECT	SHEET No.	TOTAL SHEETS
02	Sis	96	R52.5/88.4	170	208

Mufeed Khalaf 5/27/16
REGISTERED CIVIL ENGINEER DATE

06-15-16
PLANS APPROVAL DATE

REGISTERED PROFESSIONAL ENGINEER Mufeed Khalaf No. 54260 Exp. 12-31-17 CIVIL STATE OF CALIFORNIA

The State of California or its officers or agents shall not be responsible for the accuracy or completeness of electronic copies of this plan sheet.

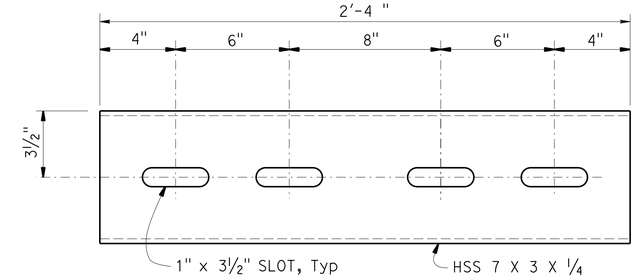

(FOR HSS 8 X 4 X 5/16 RAIL)

STANDARD SLEEVE DETAIL

3" = 1'-0"

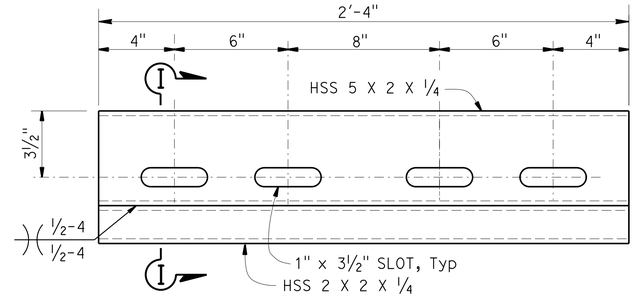

(FOR HSS 8 X 3 X 5/16 RAIL)

STANDARD SLEEVE DETAIL

3" = 1'-0"

NOTES:

1. HS bolts with nut and washers, snug tightened, and thread locking system.
2. Use ¾"Ø X 4 5/16 (HSS 8 X 3 X 5/16)
   Use ¾"Ø X 5 5/16 (HSS 8 X 4 X 5/16)

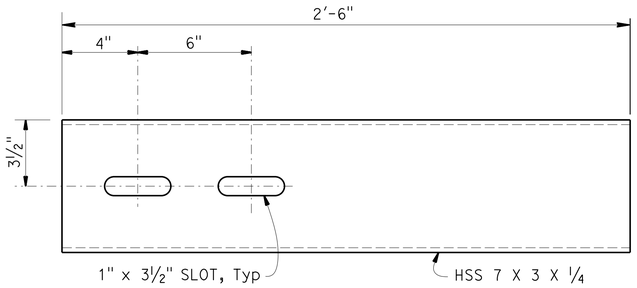

(FOR HSS 8 X 4 X 5/16 RAIL)

EXPANSION SLEEVE DETAIL

3" = 1'-0"

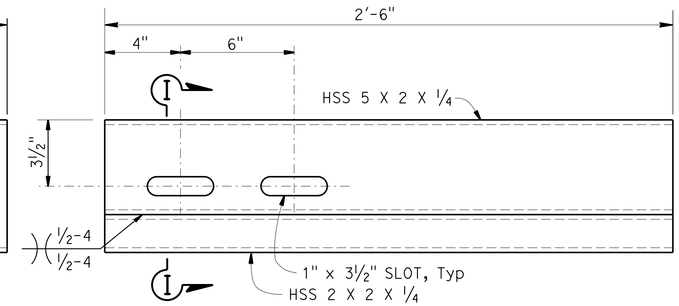

(FOR HSS 8 X 3 X 5/16 RAIL)

EXPANSION SLEEVE DETAIL

3" = 1'-0"

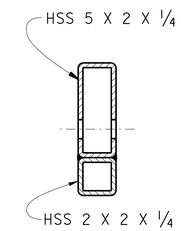

SECTION I-I

3" = 1'-0"

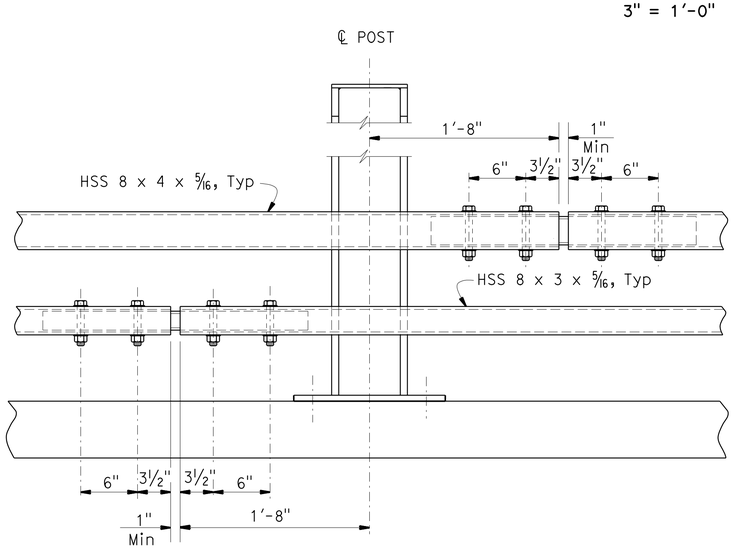

STANDARD SPLICE

1½" = 1'-0"

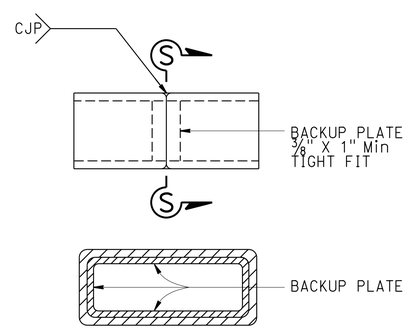

SECTION S-S

ALTERNATE TUBE WELDED SPLICE

1½" = 1'-0"

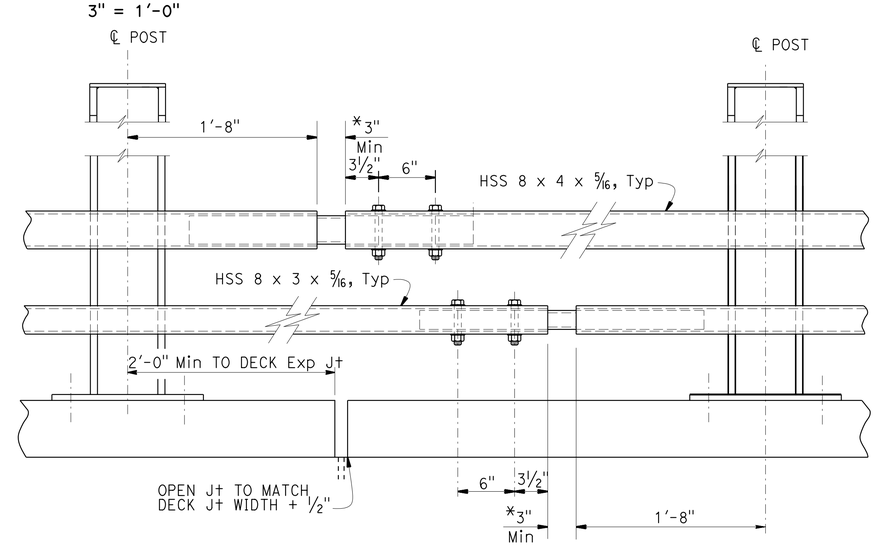

EXPANSION SPLICE

1½" = 1'-0"
* MATCH DECK OR WALL JOINT

STANDARD DRAWING				
FILE NO. xs16-130-4	APPROVAL DATE January 2015	The components of this Bridge Standard Drawing have been prepared under the responsible charge of the Technical Owner, a registered civil engineer in the State of California. Refer to: http://www.dot.ca.gov/hq/esc/techpubs/manual/bridgemanuals/bridge-standard-detail-sheet/index.html. The selection and proper application of the component design and any modifications shown have been prepared under the responsible charge of the registered civil engineer for the project.	STATE OF CALIFORNIA DEPARTMENT OF TRANSPORTATION	DIVISION OF ENGINEERING SERVICES

BRIDGE NO. 02-0072
POST MILE 60.17

SEIAD CREEK BRIDGE (WIDEN)
CALIFORNIA ST-70 BRIDGE RAIL
DETAILS No. 4

DS OSD 2147A (ENGLISH STANDARD DRAWING "XS" BORDER REV. (02-02-11)

ORIGINAL SCALE IN INCHES FOR REDUCED PLANS 0 1 2 3

UNIT: X
PROJECT NUMBER & PHASE: 02120000121
CONTRACT NO.: 02-4E6504

DISREGARD PRINTS BEARING EARLIER REVISION DATES

REVISION DATES: 6-14-14 12-19-14 1-14-15

SHEET 28 OF 32

FILE => 02-0072-x-st-70-04.dgn

USERNAME => s115152 DATE PLOTTED => 23-AUG-2016 TIME PLOTTED => 06:21

DIST	COUNTY	ROUTE	POST MILES TOTAL PROJECT	SHEET No.	TOTAL SHEETS
02	Sis	96	R52.5/88.4	171	208

Mufeed Khalaf 5/27/16
REGISTERED CIVIL ENGINEER DATE

06-15-16
PLANS APPROVAL DATE

REGISTERED PROFESSIONAL ENGINEER
Mufeed Khalaf
No. 54260
Exp. 12-31-17
CIVIL
STATE OF CALIFORNIA

The State of California or its officers or agents shall not be responsible for the accuracy or completeness of scanned copies of this plan sheet.

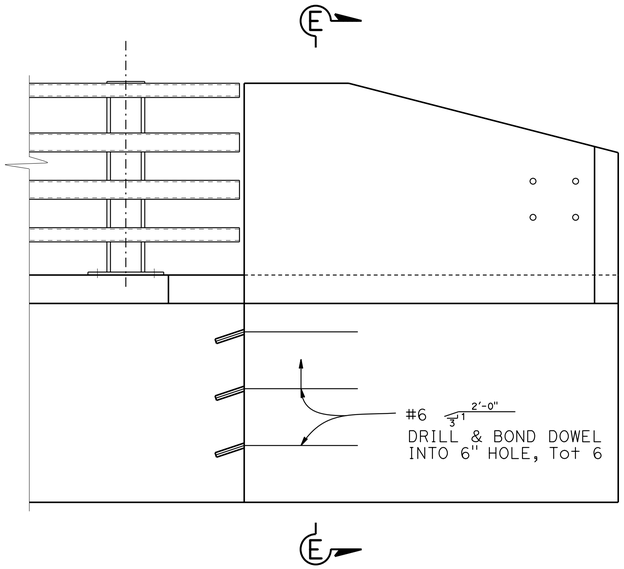

ELEVATION
3/4" = 1'-0"

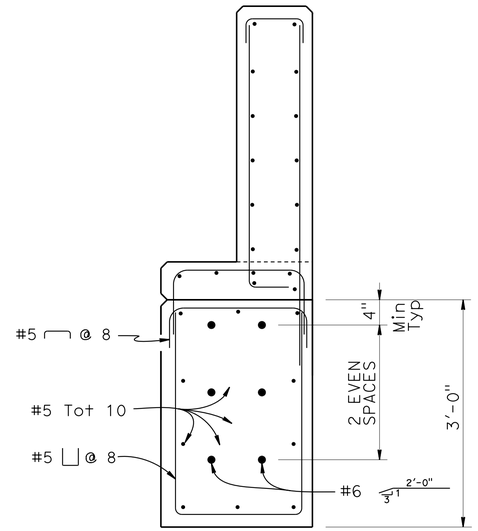

SECTION E-E
1' = 1'-0"

NOTES:

1. For details not shown see "CALIFORNIA ST-70 BRIDGE RAIL, DETAIL No.3" sheet

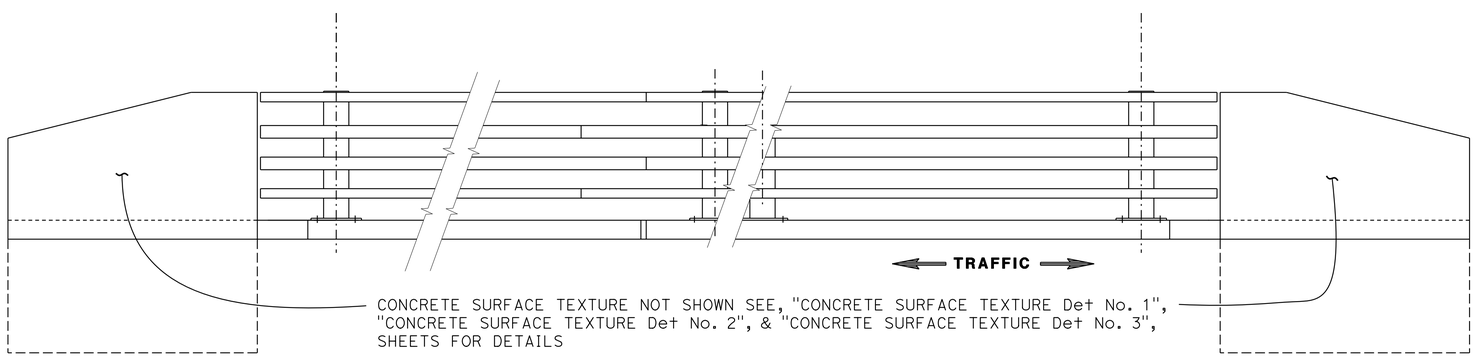

ELEVATION
1/2" = 1'-0"

NOTE:
THE CONTRACTOR MUST VERIFY ALL CONTROLLING FIELD DIMENSIONS BEFORE ORDERING OR FABRICATING ANY MATERIAL.

	BY	CHECKED
DESIGN	Quang Nguyen	Eric Burgeson
DETAILS	Jay Reid	Eric Burgeson
QUANTITIES	Mufeed Khalaf	Shadi Motalebi

STATE OF CALIFORNIA
DEPARTMENT OF TRANSPORTATION

DIVISION OF ENGINEERING SERVICES
STRUCTURE DESIGN
DESIGN BRANCH 3

BRIDGE NO. 02-0072
POST MILE 60.17

SEIAD CREEK BRIDGE (WIDEN)
BARRIER END BLOCK DETAILS

STRUCTURES DESIGN DETAIL SHEET (ENGLISH) (REV. 09-01-10)

ORIGINAL SCALE IN INCHES FOR REDUCED PLANS 0 1 2 3

UNIT: 3578
PROJECT NUMBER & PHASE: 02120000121
CONTRACT NO.: 02-4E6504

DISREGARD PRINTS BEARING EARLIER REVISION DATES

REVISION DATES: 2-18-15 4-17-15 6-18-15 5-23-16

SHEET 29 OF 32

FILE => 02-0072-y-blendd+.dgn

USERNAME => s115152 DATE PLOTTED => 23-AUG-2016 TIME PLOTTED => 06:21

DIST	COUNTY	ROUTE	POST MILES TOTAL PROJECT	SHEET No	TOTAL SHEETS
02	Sis	96	R52.5/88.4	172	208

PROFESSIONAL GEOLOGIST 2-3-16

06-15-16
PLANS APPROVAL DATE

PROFESSIONAL GEOLOGIST Timothy Alan Alderman No. 9302 Exp. 9-30-17 STATE OF CALIFORNIA

The State of California or its officers or agents shall not be responsible for the accuracy or completeness of electronic copies of this plan sheet.

This LOTB sheet was prepared in accordance with the Caltrans Soil & Rock Logging, Classification, & Presentation Manual (2010 Edition).

See 2010 Standard Plans A10F and A10G for Soil Legend, and A10H for Rock Legend.

BENCH MARK

CM6015 Elev 1369.98
Fnd Brass Disk in Conc
38.51' S15°32'52"E Sta 10+00.00
"S" LINE, Rte 96
N 2,556,897.36
E 6,235,260.67
NAVD88

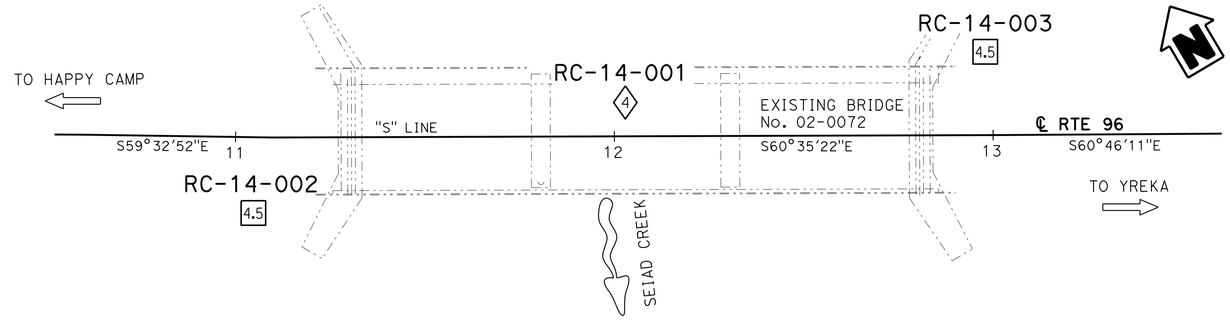

PLAN

1" = 20'

Note: Groundwater was encountered in Boring RC-14-003 but elevation was not measured.

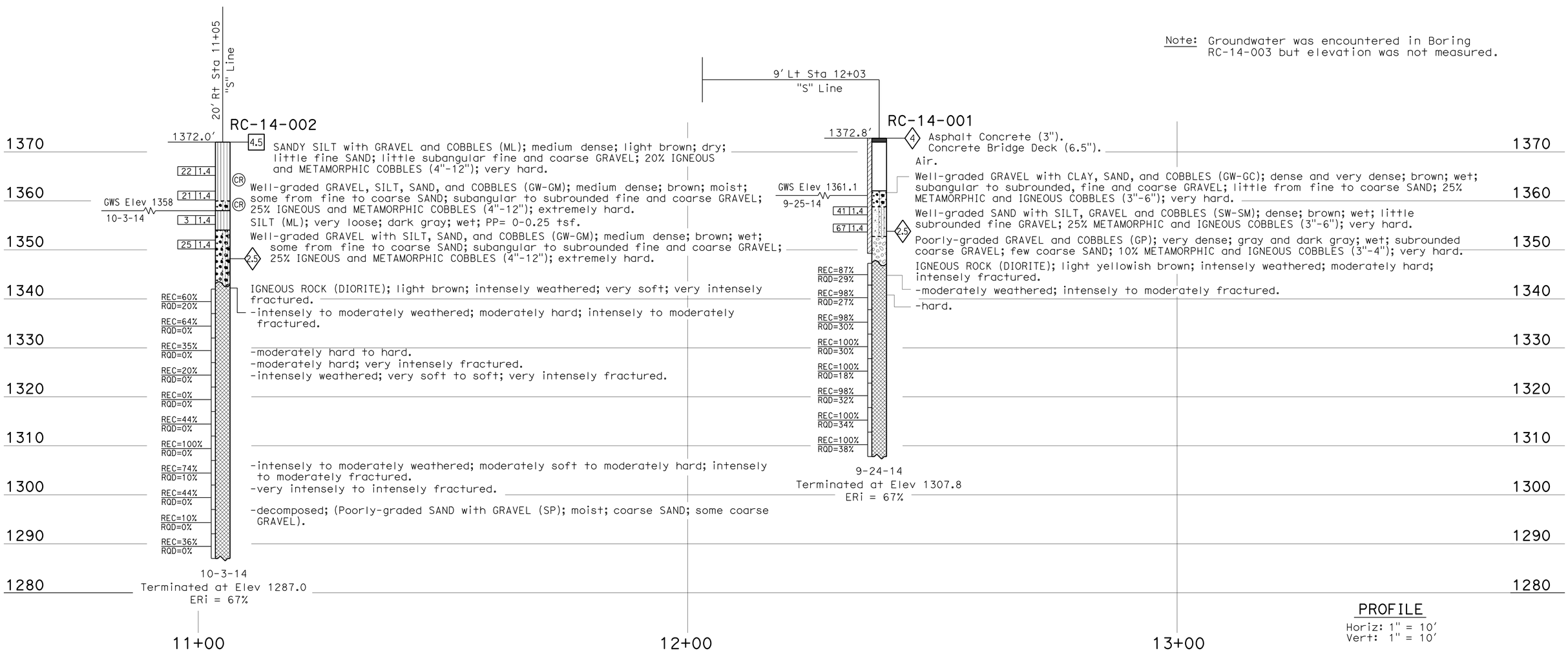

PROFILE

Horiz: 1" = 10'
Vert: 1" = 10'

ENGINEERING SERVICES	MATERIALS AND GEOTECHNICAL SERVICES	STATE OF CALIFORNIA DEPARTMENT OF TRANSPORTATION	DIVISION OF ENGINEERING SERVICES STRUCTURE DESIGN DESIGN BRANCH 3	BRIDGE NO. 02-0072 POST MILE 60.17	SEIAD CREEK BRIDGE (WIDEN)
FUNCTIONAL SUPERVISOR NAME: A. Perez-Cobo	DRAWN BY: I. G-Remmen CHECKED BY: A. Barrie	FIELD INVESTIGATION BY: T. Alderman			LOG OF TEST BORINGS 1 OF 3

OGS CIVIL LOG OF TEST BORINGS SHEET

ORIGINAL SCALE IN INCHES FOR REDUCED PLANS 0 1 2 3

UNIT: 3650
PROJECT NUMBER & PHASE: 02120000121
CONTRACT NO.: 02-4E6504

DISREGARD PRINTS BEARING EARLIER REVISION DATES

REVISION DATES 11-18-15 01-26-16 02-03-16

SHEET 30 OF 32

FILE => 02-0072-z-lotb01.dgn

USERNAME => s115152 DATE PLOTTED => 23-AUG-2016 TIME PLOTTED => 06:21

DIST	COUNTY	ROUTE	POST MILES TOTAL PROJECT	SHEET No	TOTAL SHEETS
02	Sis	96	R52.5/88.4	173	208

PROFESSIONAL GEOLOGIST 2-3-16

PROFESSIONAL GEOLOGIST Timothy Alan Alderman No. 9302 Exp. 9-30-17 STATE OF CALIFORNIA

06-15-16
PLANS APPROVAL DATE

The State of California or its officers or agents shall not be responsible for the accuracy or completeness of electronic copies of this plan sheet.

This LOTB sheet was prepared in accordance with the Caltrans Soil & Rock Logging, Classification, & Presentation Manual (2010 Edition).

See 2010 Standard Plans A10F and A10G for Soil Legend, and A10H for Rock Legend.

FOR PLAN VIEW, SEE
"LOG OF TEST BORINGS 1 OF 3"

Note: Groundwater was encountered in Boring RC-14-003 but elevation was not measured.

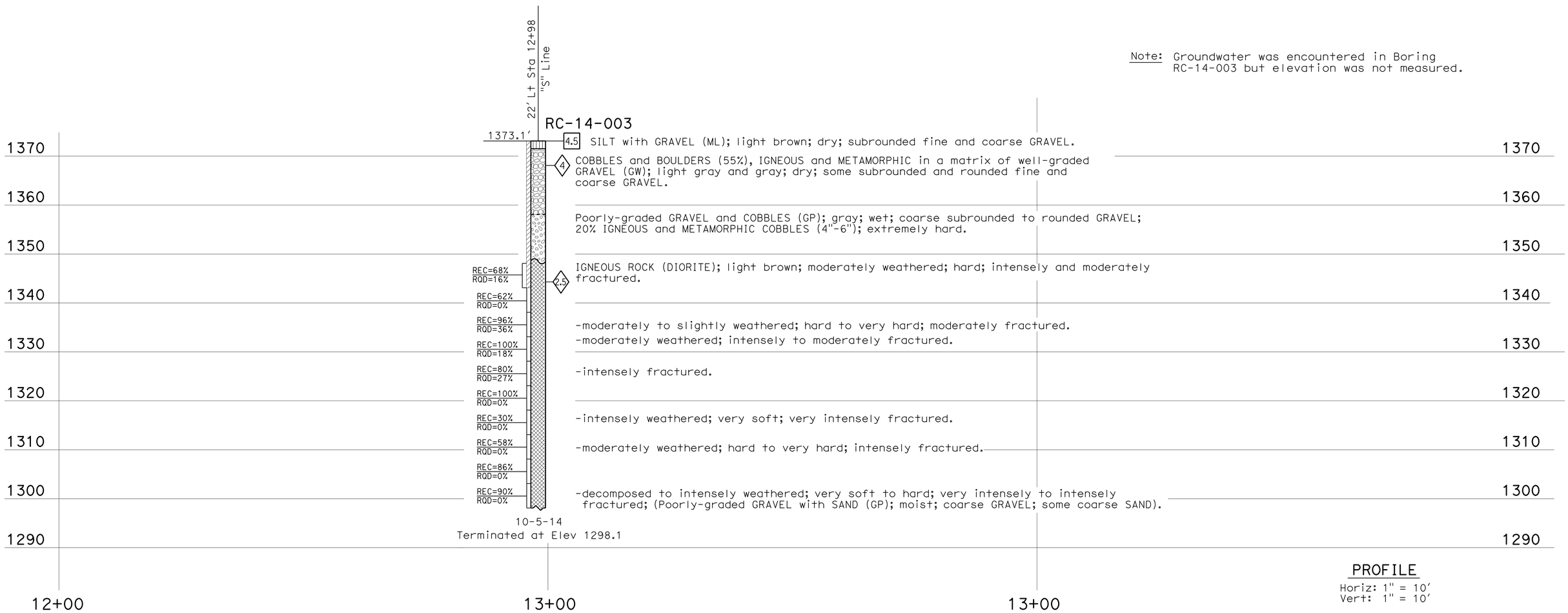

PROFILE
Horiz: 1" = 10'
Vert: 1" = 10'

ENGINEERING SERVICES	MATERIALS AND GEOTECHNICAL SERVICES	STATE OF CALIFORNIA DEPARTMENT OF TRANSPORTATION	DIVISION OF ENGINEERING SERVICES STRUCTURE DESIGN DESIGN BRANCH 3	BRIDGE NO. 02-0072 POST MILE 60.17	SEIAD CREEK BRIDGE (WIDEN)
FUNCTIONAL SUPERVISOR NAME: A. Perez-Cobo	DRAWN BY: I. G-Remmen CHECKED BY: A. Barrie	FIELD INVESTIGATION BY: T. Alderman			LOG OF TEST BORINGS 2 OF 3

OGS CIVIL LOG OF TEST BORINGS SHEET

ORIGINAL SCALE IN INCHES FOR REDUCED PLANS 0 1 2 3

UNIT: 3650
PROJECT NUMBER & PHASE: 02120000121 CONTRACT NO.: 02-4E6504

DISREGARD PRINTS BEARING EARLIER REVISION DATES → REVISION DATES 11-19-15 01-26-16 02-03-16

SHEET 31 OF 32

FILE => 02-0072-z-lotb02.dgn

USERNAME => s115152 DATE PLOTTED => 23-AUG-2016 TIME PLOTTED => 06:21

DISTRICT	STATE	ROUTE	SECTION	PROJECT NO.	SHEET NO.
2	CAL.				

DIST.	COUNTY	ROUTE	SECTION	SHEET NO.	TOTAL SHEETS
II	Sis	96	B	3	3

June 15, 1953

BRIDGE DEPARTMENT

FIELD STUDY	By K.K. Baker 2-4-53
DRAWN	By K.K. Baker 2-4-53
CHECKED	By D.Dyson 2-27-53
Approval Recommended by	Engineering Geologist
	Asst. Bridge Planning Engineer

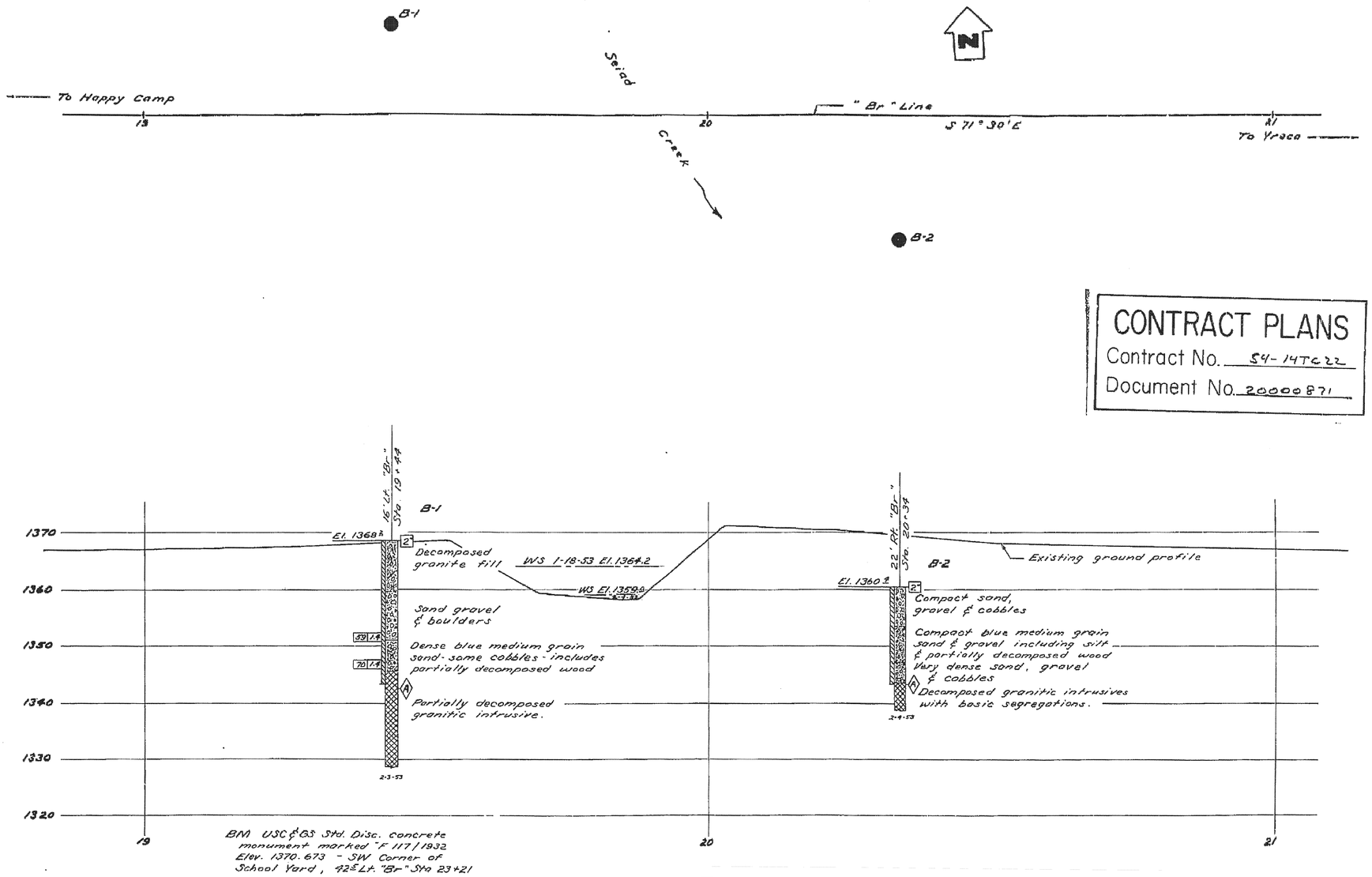

CONTRACT PLANS
Contract No. 54-14TC22
Document No. 20000871

CLASSIFICATION OF MATERIAL BASED ON STANDARD GRADE SIZE LIMITS

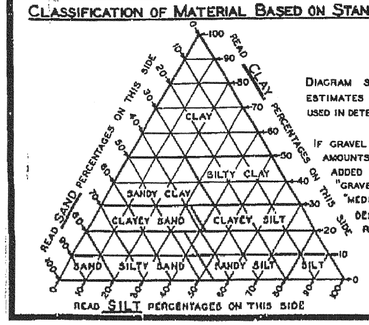

DIAGRAM SHOWING THE BASIS FOR ESTIMATES OF GRADE SIZE DISTRIBUTION USED IN DETERMINATION OF CLASS NAMES

IF GRAVEL IS PRESENT IN APPRECIABLE AMOUNTS THE TERM "GRAVELLY" MAY BE ADDED TO THE CLASS NAME, VIS. "GRAVELLY SAND". THE TERMS "COARSE", "MEDIUM" AND "FINE" WHEN USED TO DESCRIBE GRAVEL, SAND AND SILT REFER TO STANDARD GRADE SIZE LIMITS.

LEGEND OF EARTH MATERIALS

- Gravel
- Sand
- Silt
- Clay
- Sandy Clay or Clayey Sand
- Sandy Silt or Silty Sand
- Silty Clay or Clayey Silt
- Peat and/or Organic Clay
- Filled Material
- Igneous Rock
- Sedimentary Rock
- Metamorphic Rock

- Plan of any boring
- Penetrometer
- 2½" Cone penetrometer
- Sampler boring (dry)
- Rotary boring (wet)
- Auger boring (dry)
- Jet boring
- Core boring
- Test pit

DIVISION OF ENGINEERING SERVICES - MATERIALS AND GEOTECHNICAL SERVICES

As-Built Log of Test Borings sheet is considered an informational document only. As such, the State of California registration seal with signature, license number and registration certificate expiration date confirm that this is a true and accurate copy of the original document. It does not attest to the accuracy or validity of the information contained in the original document. This drawing is available and presented only for the convenience of any bidder, contractor or other interested party.

DIST.	COUNTY	ROUTE	POST MILE-TOTAL PROJECT	Sheet No.	Total Sheets
02	Sis	96	R52.5/88.4	174	208

PROFESSIONAL GEOLOGIST — 2-3-2016 DATE

PROFESSIONAL GEOLOGIST — Timothy Alan Alderman — No. 9302 — Exp. 9-30-17 — STATE OF CALIFORNIA

SEIAD CREEK BRIDGE (WIDEN)

LOG OF TEST BORINGS 3 OF 3

UNIT: 3650	CONTRACT No.	BRIDGE No.
PROJ. No. & PHASE: 02120000121	02-4E6504	02-0072

AS-BUILT VERT DATUM: NGVD29 CONVERSION: NGVD29 + 4.06 Ft — Sheet 32 of 32

NOTE: A COPY OF THIS LOG OF TEST BORINGS IS AVAILABLE AT OFFICE OF STRUCTURE MAINTENANCE AND INVESTIGATIONS, SACRAMENTO, CALIFORNIA

NOTES

THE CONTRACTOR'S ATTENTION IS DIRECTED TO SECTION 2, ARTICLE (c) OF THE STANDARD SPECIFICATIONS AND TO THE SPECIAL PROVISIONS ACCOMPANYING THIS SET OF PLANS. CLASSIFICATION OF EARTH MATERIAL AS SHOWN ON THIS SHEET IS BASED UPON FIELD INSPECTION AND IS NOT TO BE CONSTRUED TO IMPLY MECHANICAL ANALYSIS. PENETROMETER BORINGS HAVING A RATE OF PENETRATION MEASURED IN SECONDS PER FOOT ARE DRIVEN WITH A № 2 McKIERNAN-TERRY AIR HAMMER AT 115 PSI.

STATE OF CALIFORNIA
DEPARTMENT OF PUBLIC WORKS
DIVISION OF HIGHWAYS

BRIDGE ACROSS SEIAD CREEK

LOG OF TEST BORINGS

SCALE: 1" = 10'	BRIDGE 2-72	FILE E-2	DRAWING C-1232-8

DATE PLOTTED => 23-AUG-2016
TIME PLOTTED => 06:21

DIST	COUNTY	ROUTE	POST MILES TOTAL PROJECT	SHEET No.	TOTAL SHEETS
02	Sis	96	R52.5/88.4	175	208

Mufeed Khalaf 5-27-16
REGISTERED CIVIL ENGINEER DATE

06-15-16
PLANS APPROVAL DATE

REGISTERED PROFESSIONAL ENGINEER Mufeed Khalaf No. 54260 Exp. 12-31-17 CIVIL STATE OF CALIFORNIA

The State of California or its officers or agents shall not be responsible for the accuracy or completeness of scanned copies of this plan sheet.

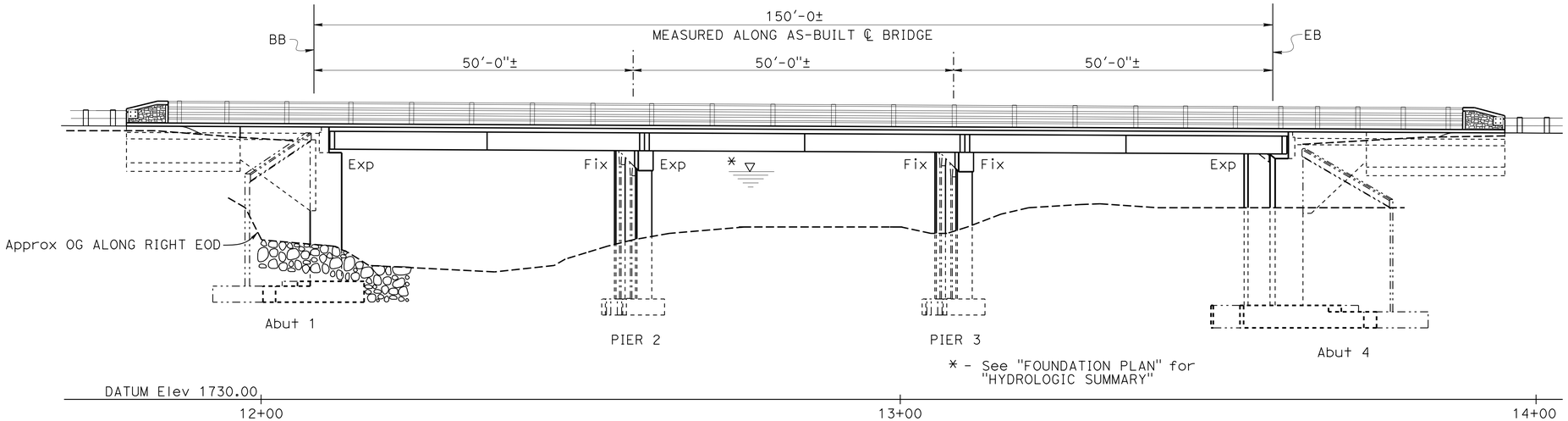

ELEVATION

1" = 10'

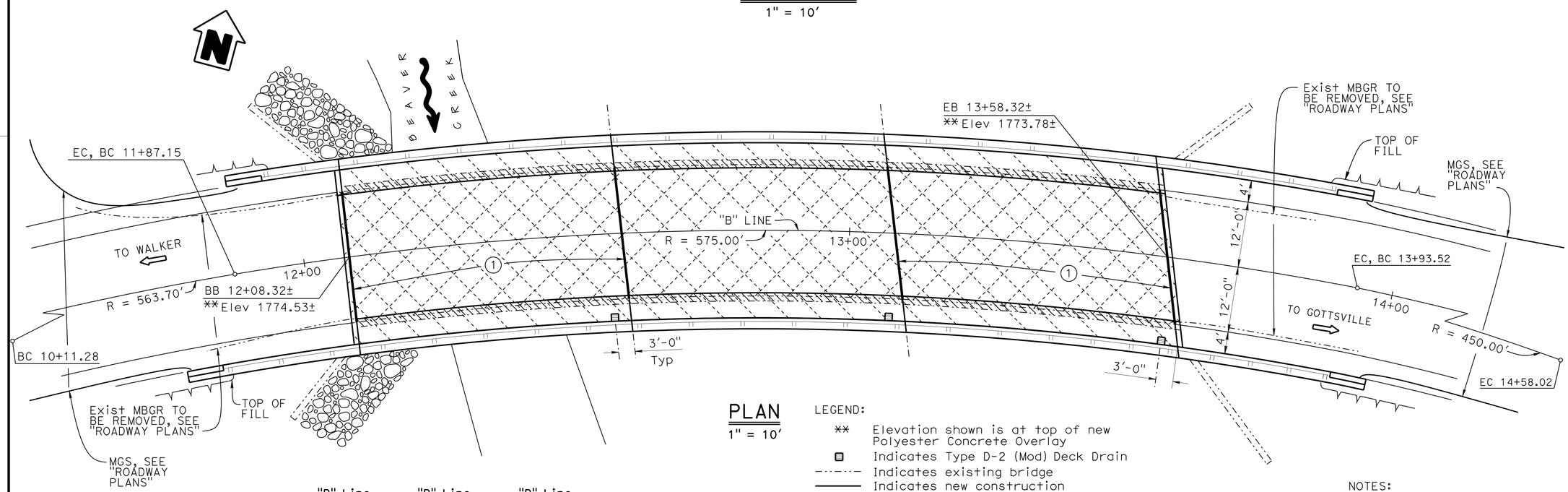

PLAN

1" = 10'

"B" Line	"B" Line	"B" Line
R=563.70'	R=575.00'	R=450.00'
Δ=17°52'31"	Δ=20°33'47"	Δ=08°12'45"
T=88.65'	T=104.30'	T=32.31'
L=175.86'	L=206.36'	L=64.50'

LEGEND:

- ** Elevation shown is at top of new Polyester Concrete Overlay
- Indicates Type D-2 (Mod) Deck Drain
- Indicates existing bridge
- Indicates new construction
- Indicates new joint seal
- Indicates existing bridge removal (portion), Location C
- Indicates limits of remove existing ¾"± Polyester Concrete Overlay, remove unsound concrete, and place rapid setting concrete patches
- Indicates limits of prepare concrete deck surface, and place 1" minimum depth Polyester Concrete Overlay
- RSP, see "ROADWAY PLANS"

NOTES:

(1) Clean expansion joints. Install new joint seal

1. For location of "Bridge Name" and "Bridge Number" see "ROADWAY PLANS"
2. For "TYPICAL SECTION", see "GENERAL PLAN No. 2" sheet
3. For "GENERAL NOTES" and "INDEX TO PLANS", see "INDEX TO PLANS" sheet
4. For "QUANTITIES", see "GENERAL PLAN No. 2" sheet

NOTE:
THE CONTRACTOR MUST VERIFY ALL CONTROLLING FIELD DIMENSIONS BEFORE ORDERING OR FABRICATING ANY MATERIAL.

Joseph E Downing
DESIGN ENGINEER

	BY	CHECKED
DESIGN	Mufeed Khalaf	Arturo V Herrera
DETAILS	J Reid/N C Gwynn	Arturo V Herrera
QUANTITIES	Eric G Burgeson	Jose M Aquino III

LOAD FACTOR DESIGN — LIVE LOADING: HS20-44 AND ALTERNATIVE AND PERMIT DESIGN LOAD

	BY	CHECKED
LAYOUT	Mufeed Khalaf	Arturo V Herrera
SPECIFICATIONS	Elaheh Mansoubi	PLANS AND SPECS COMPARED: Elaheh Mansoubi

ORIGINAL SCALE IN INCHES FOR REDUCED PLANS 0 1 2 3

STATE OF CALIFORNIA
DEPARTMENT OF TRANSPORTATION

DIVISION OF ENGINEERING SERVICES
STRUCTURE DESIGN
DESIGN BRANCH 3

BRIDGE NO. 02-0081
POST MILE 88.26

BEAVER CREEK BRIDGE (WIDEN)
GENERAL PLAN No. 1

UNIT: 3578
PROJECT NUMBER & PHASE: 02120000121
CONTRACT NO.: 02-4E6504

DISREGARD PRINTS BEARING EARLIER REVISION DATES

REVISION DATES: 4-1-14 3-21-16 1-13-16

SHEET 1 OF 34

DIST	COUNTY	ROUTE	POST MILES TOTAL PROJECT	SHEET No.	TOTAL SHEETS
02	Sis	96	R52.5/88.4	176	208

Mufeed Khalaf 5-27-16
REGISTERED CIVIL ENGINEER DATE

06-15-16
PLANS APPROVAL DATE

REGISTERED PROFESSIONAL ENGINEER Mufeed Khalaf No. 54260 Exp. 12-31-17 CIVIL STATE OF CALIFORNIA

The State of California or its officers or agents shall not be responsible for the accuracy or completeness of scanned copies of this plan sheet.

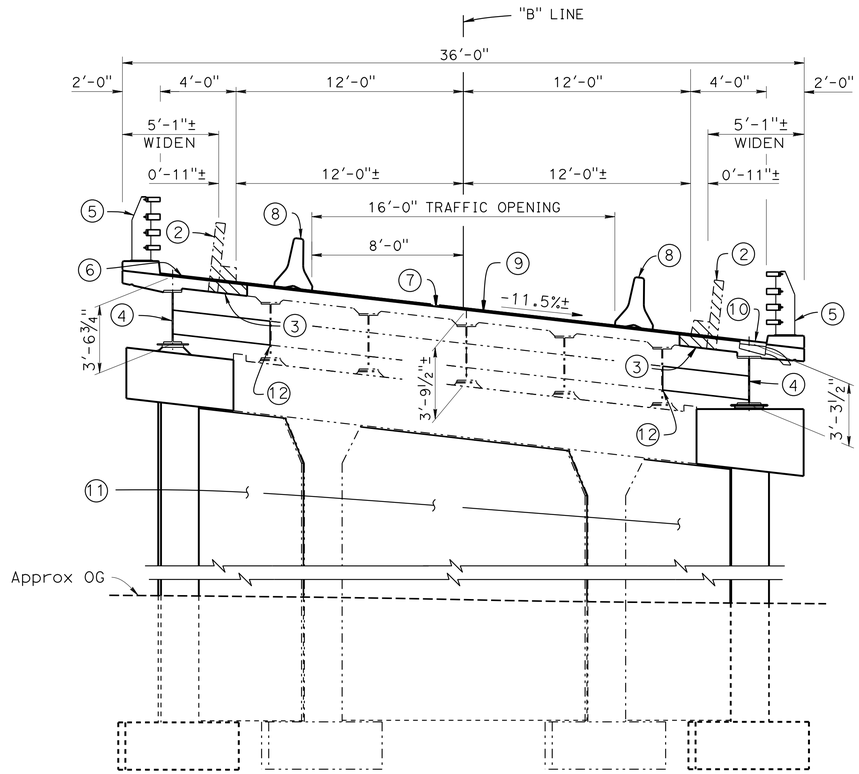

TYPICAL SECTION

¼" = 1'-0"

QUANTITIES

LEAD COMPLIANCE PLAN	LUMP	SUM
WORK AREA MONITORING (BRIDGE)	LUMP	SUM
RAPID SETTING CONCRETE (PATCH)	53	CF
REMOVE POLYESTER CONCRETE OVERLAY	3,600	SQFT
REMOVE UNSOUND CONCRETE	53	CF
PREPARE CONCRETE BRIDGE DECK SURFACE	4,800	SQFT
FURNISH POLYESTER CONCRETE OVERLAY	400	CF
PLACE POLYESTER CONCRETE OVERLAY	4,800	SQFT
BRIDGE REMOVAL (PORTION), LOCATION C	LUMP	SUM
STRUCTURE EXCAVATION (BRIDGE)	348	CY
STRUCTURE EXCAVATION (TYPE D)	474	CY
STRUCTURE BACKFILL (BRIDGE)	339	CY
STRUCTURAL CONCRETE, BRIDGE FOOTING	73	CY
STRUCTURAL CONCRETE, BRIDGE	146	CY
STRUCTURAL CONCRETE, BRIDGE (POLYMER FIBER)	49	CY
DRILL AND PRESSURE GROUT DOWEL	88	LF
DRILL AND BOND DOWEL	444	LF
DRILL AND BOND DOWEL (CHEMICAL ADHESIVE)	220	EA
CLEAN EXPANSION JOINT	100	LF
JOINT SEAL (MR 1")	33	LF
JOINT SEAL (MR 1 1/2")	97	LF
BAR REINFORCING STEEL (BRIDGE)	37,402	LB
BAR REINFORCING STEEL (EPOXY COATED)(BRIDGE)	11,701	LB
HEADED BAR REINFORCEMENT	32	EA
FURNISH STRUCTURAL STEEL (BRIDGE)	62,375	LB
ERECT STRUCTURAL STEEL (BRIDGE)	62,375	LB
CLEAN AND PAINT STRUCTURAL STEEL	LUMP	SUM
SPOT BLAST CLEAN AND PAINT UNDERCOAT	12	SQFT
PREPARE AND STAIN CONCRETE	181	SQFT
MISCELLANEOUS METAL (BRIDGE)	1,067	LB
BRIDGE DECK DRAINAGE SYSTEM	375	LB
CALIFORNIA ST-70 BRIDGE RAIL (MODIFIED)	428	LF

LEGEND:

- Indicates existing bridge
- Indicates new construction
- Indicates existing bridge removal (portion), Location C

NOTES:

(2) Existing concrete curb and steel rail to be removed
(3) Existing bridge removal (portion)
(4) Steel girders
(5) California ST-70 Bridge Rail (Mod) W/Surface Texture. For Stain Galvanized Surfaces, see "ROADWAY PLANS"
(6) Match existing slope, typ
(7) Existing ¾"± Polyester Concrete Overlay to be removed
(8) Temporary Railing (Type K), see "ROADWAY PLANS"
(9) 1" Polyester Concrete Overlay
(10) Deck Drain Type D-2 (Mod)
(11) Infill Wall
(12) Spot blast clean and paint undercoat

NOTE:
THE CONTRACTOR MUST VERIFY ALL CONTROLLING FIELD DIMENSIONS BEFORE ORDERING OR FABRICATING ANY MATERIAL.

Joseph E Downing
DESIGN ENGINEER

	BY	CHECKED
DESIGN	Mufeed Khalaf	Arturo V Herrera
DETAILS	J Reid/N C Gwynn	Arturo V Herrera
QUANTITIES	Eric G Burgeson	Jose M Aquino III

LOAD & RESISTANCE FACTOR DESIGN — LIVE LOADING: HS20-44 AND ALTERNATIVE AND PERMIT DESIGN LOAD

	BY	CHECKED
LAYOUT	Mufeed Khalaf	Arturo V Herrera
SPECIFICATIONS	Elaheh Mansoubi	Elaheh Mansoubi (PLANS AND SPECS COMPARED)

ORIGINAL SCALE IN INCHES FOR REDUCED PLANS 0 1 2 3

STATE OF CALIFORNIA
DEPARTMENT OF TRANSPORTATION

DIVISION OF ENGINEERING SERVICES
STRUCTURE DESIGN
DESIGN BRANCH 3

BRIDGE NO. 02-0081
POST MILE 88.26

BEAVER CREEK BRIDGE (WIDEN)
GENERAL PLAN No. 2

UNIT: 3578
PROJECT NUMBER & PHASE: 02120000121
CONTRACT NO.: 02-4E6504

DISREGARD PRINTS BEARING EARLIER REVISION DATES
REVISION DATES: 4-1-14 12-15-15 1-13-16

SHEET 2 OF 34

STRUCTURES DESIGN GENERAL PLAN SHEET (ENGLISH) (REV.09-01-10)

FILE => 02-0081-a-gp02.dgn

USERNAME => s115152 DATE PLOTTED => 23-AUG-2016 TIME PLOTTED => 06:21

DIST	COUNTY	ROUTE	POST MILES TOTAL PROJECT	SHEET No.	TOTAL SHEETS
02	Sis	96	R52.5/88.4	177	208

Mufeed Khalaf 5-27-16
REGISTERED CIVIL ENGINEER DATE

06-15-16
PLANS APPROVAL DATE

REGISTERED PROFESSIONAL ENGINEER Mufeed Khalaf No. 54260 Exp. 12-31-17 CIVIL STATE OF CALIFORNIA

The State of California or its officers or agents shall not be responsible for the accuracy or completeness of scanned copies of this plan sheet.

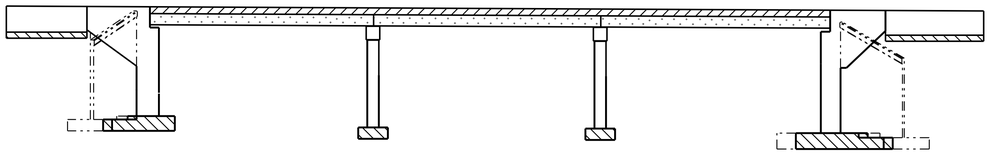

LEGEND:

- Structural Concrete, Bridge
- Structural Concrete, Bridge Footing
- Structural Concrete, Bridge (Polymer Fiber) (4000 psi @ 28 days)
- Steel girder

CONCRETE STRENGTH AND TYPE LIMITS

NO SCALE

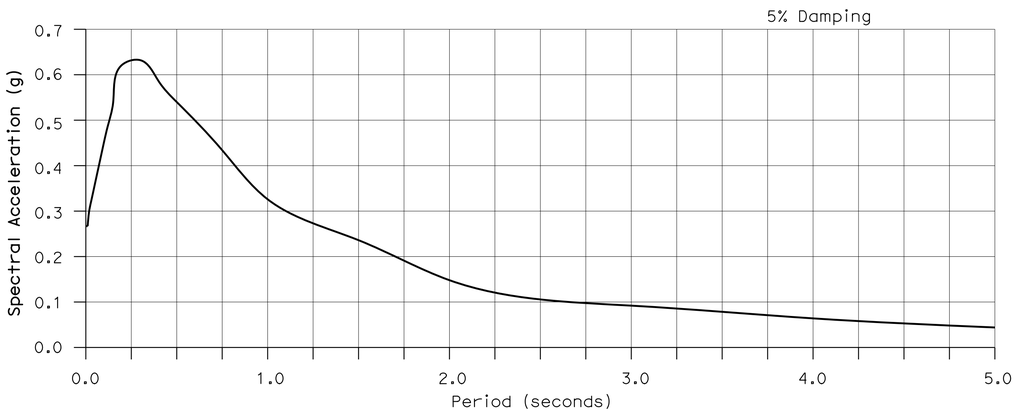

SITE SPECIFIC ARS CURVE

NO SCALE

SPREAD FOOTING DATA TABLE

Support Location	Working Stress Design (WSD)		Load Factor Design (LFD)		
	Permissible Gross Contact Stress (Settlement) (ksf)	Allowable Gross Bearing Capacity (ksf)	Permissible Net Contact Stress (Settlement) (ksf)	Factored Gross Nominal Bearing Resistance (Groups I thru VI) (ksf)	Factored Gross Nominal Bearing Resistance (Group VII) (ksf)
Abutment 1	13.0	4.0	N/A	N/A	N/A
Pier 2	N/A	N/A	40.0	15.0	10.0
Pier 3	N/A	N/A	40.0	15.0	10.0
Abutment 4	13.0	4.0	N/A	N/A	N/A

NOTE:
THE CONTRACTOR MUST VERIFY ALL CONTROLLING FIELD DIMENSIONS BEFORE ORDERING OR FABRICATING ANY MATERIAL.

GENERAL NOTES
LOAD FACTOR DESIGN

DESIGN:
Bridge Design Specifications
(April 2000 AASHTO w/Revisions by Caltrans)

SEISMIC DESIGN:
Caltrans Seismic Design Criteria (SDC), Version 1.7 dated 2013

DEAD LOAD:
Includes 11.67 psf for 1" polyester concrete overlay.
No future wearing surface allowed

LIVE LOADING:
HS20-44 and permit design load.

SEISMIC LOADING:
See "SITE SPECIFIC ARS CURVE"

CONCRETE:
fy = 60 ksi
f'c = 3.6 ksi
n = 8

STRUCTURAL STEEL (new construction):
fy = 36 ksi

ANCHOR RODS:
ASTM F1554 Grade 55

STRUCTURAL STEEL (assumed for evaluation of existing structure):
fy = 33 ksi

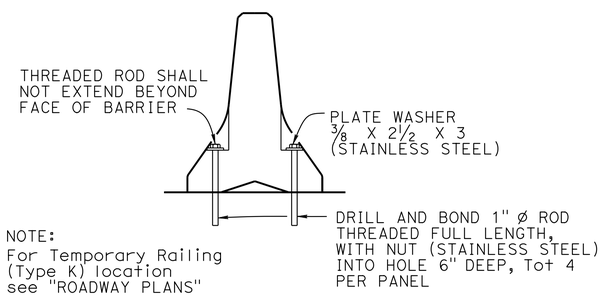

NOTE:
For Temporary Railing (Type K) location see "ROADWAY PLANS"

TYPE K RAILING ATTACHMENT

NO SCALE

INDEX TO PLANS

SHEET No.	TITLE
1	GENERAL PLAN No. 1
2	GENERAL PLAN No. 2
3	INDEX TO PLANS
4	STRUCTURE EXCAVATION AND BACKFILL
5	FOUNDATION PLAN
6	ABUTMENT LAYOUT
7	ABUTMENT DETAILS No. 1
8	ABUTMENT DETAILS No. 2
9	ABUTMENT DETAILS No. 3
10	ABUTMENT DETAILS No. 4
11	ABUTMENT DETAILS No. 5
12	ABUTMENT DETAILS No. 6
13	ABUTMENT DETAILS No. 7
14	ABUTMENT DETAILS No. 8
15	PIER DETAILS No. 1
16	PIER DETAILS No. 2
17	PIER DETAILS No. 3
18	PIER DETAILS No. 4
19	PIER DETAILS No. 5
20	TYPICAL SECTION
21	GIRDER LAYOUT
22	GIRDER DETAILS
23	JOINT SEAL DETAILS No. 1
24	JOINT SEAL DETAILS No. 2
25	BRIDGE REMOVAL (PORTION) Det No. 1
26	BRIDGE REMOVAL (PORTION) Det No. 2
27	CONCRETE SURFACE TEXTURE Det No. 1
28	CONCRETE SURFACE TEXTURE Det No. 2
29	CALIFORNIA ST-70 BRIDGE RAIL DETAILS NO. 1
30	CALIFORNIA ST-70 BRIDGE RAIL DETAILS NO. 2
31	CALIFORNIA ST-70 BRIDGE RAIL DETAILS NO. 3
32	CALIFORNIA ST-70 BRIDGE RAIL DETAILS NO. 4
33	LOG OF TEST BORINGS 1 OF 2
34	LOG OF TEST BORINGS 2 OF 2

STANDARD PLANS DATED 2010

	A10A	ABBREVIATIONS (SHEET 1 OF 2)
RSP	A10B	ABBREVIATIONS (SHEET 2 OF 2)
	A10C	LINES AND SYMBOLS (SHEET 1 OF 3)
	A10D	LINES AND SYMBOLS (SHEET 2 OF 3)
	A10E	LINES AND SYMBOLS (SHEET 3 OF 3)
RSP	A10F	LEGEND - SOIL (SHEET 1 OF 2)
RSP	A10G	LEGEND - SOIL (SHEET 2 OF 2)
	A10H	LEGEND - ROCK
	A62C	LIMITS OF PAYMENT FOR EXCAVATION AND BACKFILL - BRIDGE
RSP	A77U1	MIDWEST GUARDRAIL SYSTEM CONNECTION To BRIDGE RAILINGS WITHOUT SIDEWALKS DETAILS NO. 1
RSP	A77U2	MIDWEST GUARDRAIL SYSTEM CONNECTION To BRIDGE RAILINGS WITHOUT SIDEWALKS DETAILS NO. 2
	A78F1	DOUBLE THRIE BEAM BARRIER-CONNECTION TO BRIDGE RAILINGS WITHOUT SIDEWALKS
	A78F2	SINGLE THRIE BEAM BARRIER-CONNECTION TO BRIDGE RAILINGS WITHOUT SIDEWALKS
	B0-1	BRIDGE DETAILS
	B0-3	BRIDGE DETAILS
RSP	B3-1A	RETAINING WALL TYPE 1 (CASE 1)
RSP	B6-21	JOINT SEALS (MAXIMUM MOVEMENT RATING = 2")
	B7-6	DECK DRAINS TYPES D-1 AND D-2

STANDARD PLAN SHEET No.

DETAIL No.

	BY	CHECKED
DESIGN	Mufeed Khalaf	Arturo V Herrera
DETAILS	Nancy C Gwynn	Arturo V Herrera
QUANTITIES	Eric G Burgeson	Jose M Aquino III

STATE OF CALIFORNIA
DEPARTMENT OF TRANSPORTATION

DIVISION OF ENGINEERING SERVICES
STRUCTURE DESIGN
DESIGN BRANCH 3

BRIDGE NO. 02-0081
POST MILE 88.26

BEAVER CREEK BRIDGE (WIDEN)
INDEX TO PLANS

STRUCTURES DESIGN DETAIL SHEET (ENGLISH) (REV. 09-01-10)

ORIGINAL SCALE IN INCHES FOR REDUCED PLANS 0 1 2 3

UNIT: 3578
PROJECT NUMBER & PHASE: 02120000121
CONTRACT NO.: 02-4E6504

DISREGARD PRINTS BEARING EARLIER REVISION DATES

REVISION DATES

SHEET 3 OF 34

FILE => 02-0081-a-itp.dgn

USERNAME => s113512 DATE PLOTTED => 23-AUG-2016 TIME PLOTTED => 06:21

DIST	COUNTY	ROUTE	POST MILES TOTAL PROJECT	SHEET No.	TOTAL SHEETS
02	Sis	96	R52.5/88.4	178	208

Mufeed Khalaf 5-27-16
REGISTERED CIVIL ENGINEER DATE

06-15-16
PLANS APPROVAL DATE

REGISTERED PROFESSIONAL ENGINEER Mufeed Khalaf No. 54260 Exp. 12-31-17 CIVIL STATE OF CALIFORNIA

The State of California or its officers or agents shall not be responsible for the accuracy or completeness of scanned copies of this plan sheet.

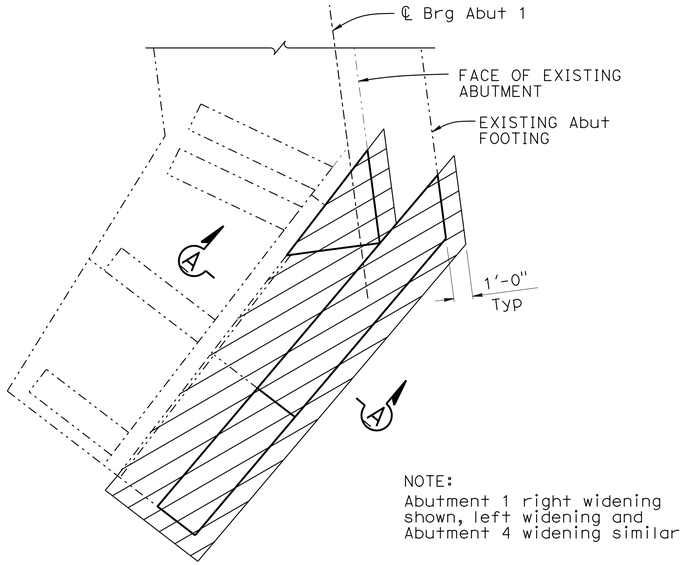

NOTE:
Abutment 1 right widening shown, left widening and Abutment 4 widening similar

PART PLAN
1/4" = 1'-0"

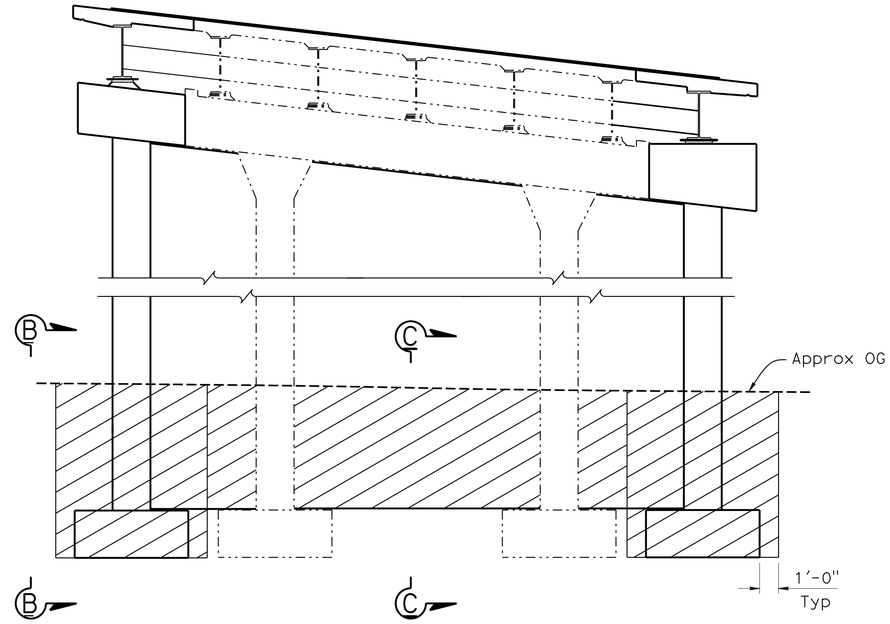

PIER ELEVATION
1/4" = 1'-0"

LEGEND:
- Structure Excavation (Type D)
- Structure Excavation (Bridge)
- Structure Backfill (Bridge)

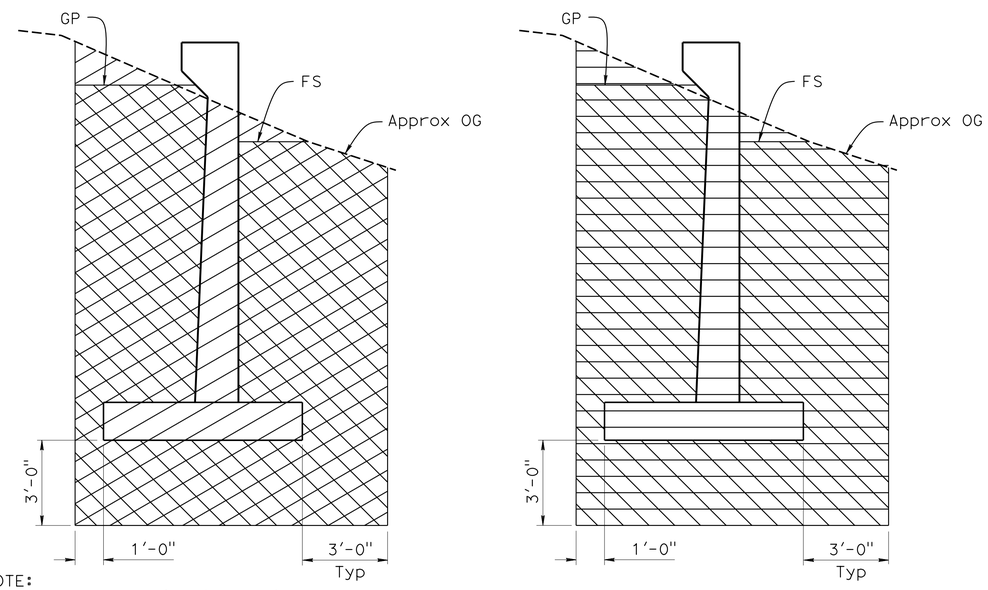

NOTE:
Structure Excavation (Type D) at Abutment 4 left retaining wall type wingwall only

RETAINING WALL TYPE WINGWALL
3/8" = 1'-0"

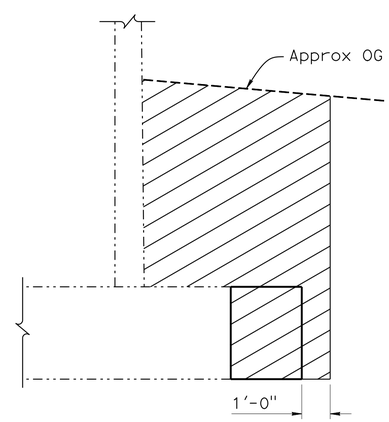

SECTION A-A
3/8" = 1'-0"

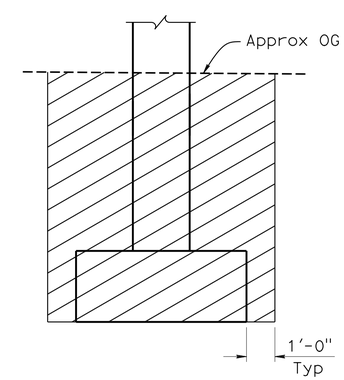

SECTION B-B
3/8" = 1'-0"

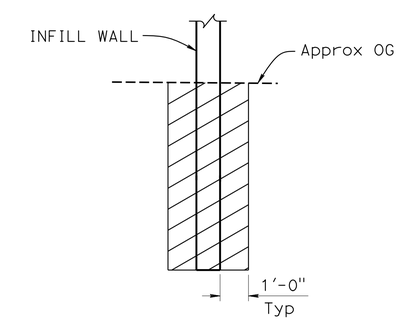

SECTION C-C
3/8" = 1'-0"

NOTE:
THE CONTRACTOR MUST VERIFY ALL CONTROLLING FIELD DIMENSIONS BEFORE ORDERING OR FABRICATING ANY MATERIAL.

	BY	CHECKED
DESIGN	Mufeed Khalaf	Arturo V Herrera
DETAILS	Nancy C Gwynn	Arturo V Herrera
QUANTITIES	Eric G Burgeson	Jose M Aquino III

STATE OF CALIFORNIA
DEPARTMENT OF TRANSPORTATION

DIVISION OF ENGINEERING SERVICES
STRUCTURE DESIGN
DESIGN BRANCH 3

BRIDGE NO. 02-0081
POST MILE 88.26

BEAVER CREEK BRIDGE (WIDEN)
STRUCTURE EXCAVATION AND BACKFILL

STRUCTURES DESIGN DETAIL SHEET (ENGLISH) (REV. 09-01-10)

ORIGINAL SCALE IN INCHES FOR REDUCED PLANS 0 1 2 3

UNIT: 3578
PROJECT NUMBER & PHASE: 02120000121
CONTRACT NO.: 02-4E6504

DISREGARD PRINTS BEARING EARLIER REVISION DATES

REVISION DATES 11-18-15 ..... 5-11-16 1-18-16

SHEET 4 OF 34

FILE => 02-0081-b-ex.dgn

USERNAME => s113152 DATE PLOTTED => 23-AUG-2016 TIME PLOTTED => 06:21

DIST	COUNTY	ROUTE	POST MILES TOTAL PROJECT	SHEET No.	TOTAL SHEETS
02	Sis	96	R52.5/88.4	179	208

Mufeed Khalaf 5-27-16
REGISTERED CIVIL ENGINEER DATE

06-15-16
PLANS APPROVAL DATE

REGISTERED PROFESSIONAL ENGINEER Mufeed Khalaf No. 54260 Exp. 12-31-17 CIVIL STATE OF CALIFORNIA

The State of California or its officers or agents shall not be responsible for the accuracy or completeness of electronic copies of this plan sheet.

CURVE DATA

No. Ⓑ	R	Δ	T	L
1	563.70	17°52'31"	88.65	175.86
2	575.00	20°33'47"	104.30	206.36
3	450.00	08°12'45"	32.31	64.50
4	450.00	07°22'41"	29.01	57.95

SCOUR DATA TABLE

SUPPORT No.	LONG TERM (DEGRADATION & CONTRACTION) SCOUR Elev (ft)	SHORT TERM (LOCAL) SCOUR DEPTH (ft)
Abut 1	N/A	6.1
Pier 2	N/A	8.6
Pier 3	N/A	6.3
Abut 4	N/A	3.1

LEGEND:

Indicates bottom of footing elevation

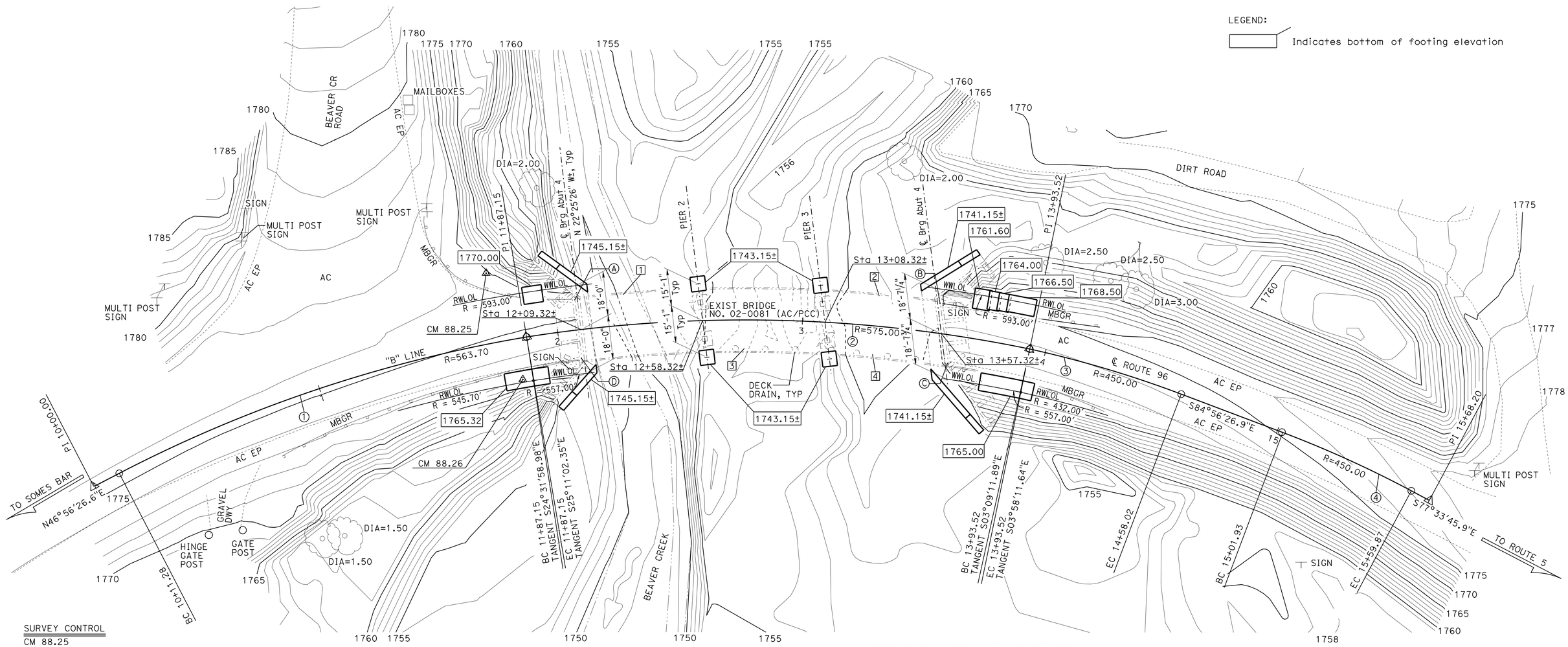

SURVEY CONTROL

CM 88.25
Fnd ¾" REBAR w/ ALUM CAP
28.51' Lt. "B" LINE ℄ Rte 96
Sta. 11+75.78
N 2,565,682.08
E 6,338,997.57
Elev. = 1775.25

CM 88.26
Fnd ¾" REBAR w/ ALUM CAP
16.84' Rt. "B" LINE ℄ Rte 96
Sta. 11+82.62
N 2,565,644.35
E 6,339,023.65
Elev. = 1772.65

Bridge Location #02-0081
Ⓐ - 12.27 Lt. ℄, Sta.12+08.36, Elev.=1775.91± (AC)
Ⓑ - 12.18 Lt. ℄, Sta.13+54.79, Elev.=1775.12± (AC)
Ⓒ - 11.64 Rt. ℄, Sta.13+61.14, Elev.=1772.45± (AC)
Ⓓ - 11.76 Rt. ℄, Sta.12+08.34, Elev.=1773.23± (AC)

NOTE:
THE CONTRACTOR MUST VERIFY ALL CONTROLLING FIELD DIMENSIONS BEFORE ORDERING OR FABRICATING ANY MATERIAL.

HYDROLOGIC / HYDRAULIC DATA SUMMARY

DRAINAGE AREA: 109 SQUARE MILES

	DESIGN FLOOD	BASE FLOOD
FREQUENCY (YEARS)	50	100
DISCHARGE (CUBIC FEET PER SECOND)	15,154	18,576
WATER SURFACE ELEV. (FEET)	1767.83	1769.61

FLOOD PLAIN DATA ARE BASED UPON INFORMATION AVAILABLE WHEN THE PLANS WERE PREPARED AND ARE SHOWN TO MEET FEDERAL REQUIREMENTS. THE ACCURACY OF SAID INFORMATION IS NOT WARRANTED BY THE STATE AND INTERESTED OR AFFECTED PARTIES SHOULD MAKE THEIR OWN INVESTIGATIONS.

DECK ELEVATIONS

1 1775.81 2 1775.30
3 1772.91 4 1772.59

PRELIMINARY INVESTIGATION SECTION

SCALE	VERT.DATUM NGVD88	PHOTOGRAMMETRY AS OF: X			
1"=20'	HORZ.DATUM NAD83	SURVEYED	BY DISTRICT	CHECKED	BY J. BORDEN 5/2014
ALIGNMENT TIES Dist TRAVERSE SHEET		DRAFTED	BY L. YOUNG 5/2014	CHECKED	BY S. SOU 5/2014

	BY	CHECKED
DESIGN	Mufeed Khalaf	Arturo V Herrera
DETAILS	Nancy C Gwynn	Arture V Herrera
QUANTITIES	Eric G Burgeson	Jose M Aquino III

STATE OF CALIFORNIA
DEPARTMENT OF TRANSPORTATION

DIVISION OF ENGINEERING SERVICES
STRUCTURE DESIGN
DESIGN BRANCH 3

BRIDGE NO. 02-0081
POST MILE 88.26

BEAVER CREEK BRIDGE (WIDEN)
FOUNDATION PLAN

STRUCTURES FOUNDATION PLAN SHEET (ENGLISH) (REV. 09-01-10)

ORIGINAL SCALE IN INCHES FOR REDUCED PLANS 0 1 2 3

UNIT: 3646
PROJECT NUMBER & PHASE: 02120000121 CONTRACT NO.: 02-4E6504

DISREGARD PRINTS BEARING EARLIER REVISION DATES

REVISION DATES 5/15/14 12-4-15 3-3-16

SHEET 5 OF 34

FILE => 02-0081-e-fpl.dgn

USERNAME => s115152 DATE PLOTTED => 23-AUG-2016 TIME PLOTTED => 06:21

DIST	COUNTY	ROUTE	POST MILES TOTAL PROJECT	SHEET No.	TOTAL SHEETS
02	Sis	96	R52.5/88.4	180	208

Mufeed Khalaf 5-27-16
REGISTERED CIVIL ENGINEER DATE

06-15-16
PLANS APPROVAL DATE

REGISTERED PROFESSIONAL ENGINEER
Mufeed Khalaf
No. 54260
Exp. 12-31-17
CIVIL
STATE OF CALIFORNIA

The State of California or its officers or agents shall not be responsible for the accuracy or completeness of scanned copies of this plan sheet.

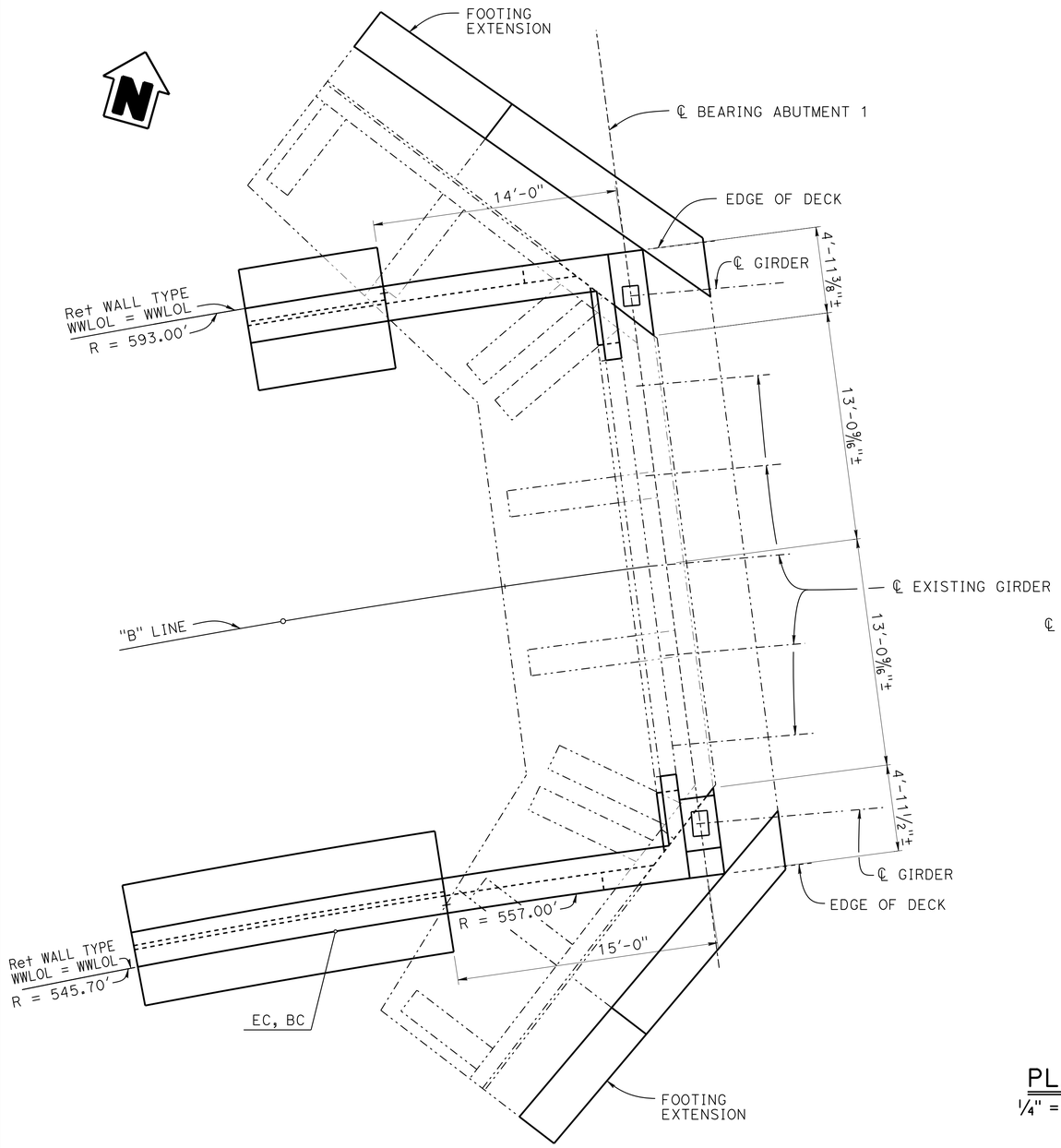

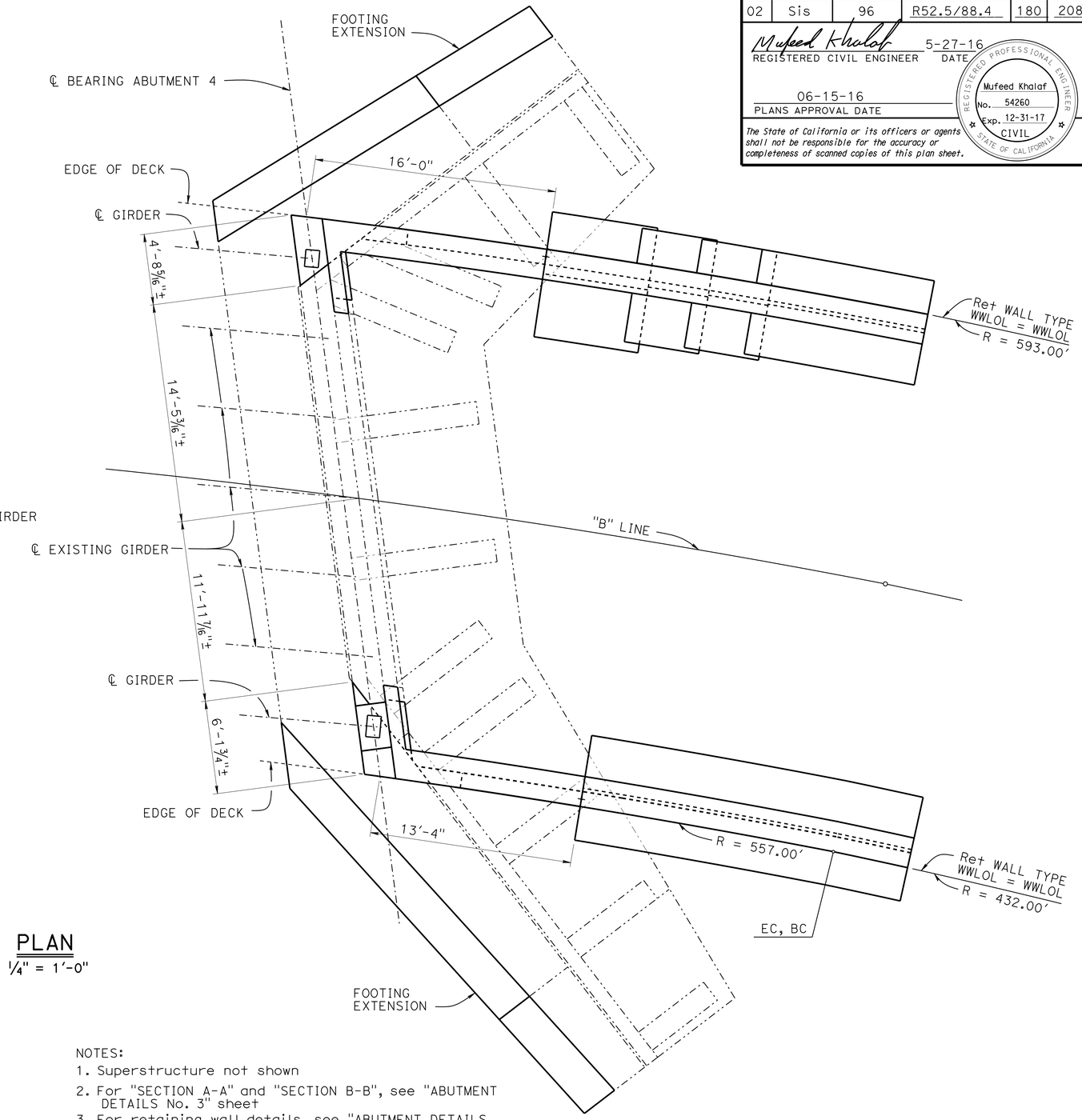

PLAN
1/4" = 1'-0"

NOTES:
1. Superstructure not shown
2. For "SECTION A-A" and "SECTION B-B", see "ABUTMENT DETAILS No. 3" sheet
3. For retaining wall details, see "ABUTMENT DETAILS No. 7" and "ABUTMENT DETAILS No. 8" sheets

NOTE:
THE CONTRACTOR MUST VERIFY ALL CONTROLLING FIELD DIMENSIONS BEFORE ORDERING OR FABRICATING ANY MATERIAL.

	BY	CHECKED
DESIGN	Mufeed Khalaf	Arturo V Herrera
DETAILS	Nancy C Gwynn	Arturo V Herrera
QUANTITIES	Eric G Burgeson	Jose M Aquino III

STATE OF CALIFORNIA
DEPARTMENT OF TRANSPORTATION

DIVISION OF ENGINEERING SERVICES
STRUCTURE DESIGN
DESIGN BRANCH 3

BRIDGE NO. 02-0081
POST MILE 88.26

BEAVER CREEK BRIDGE (WIDEN)
ABUTMENT LAYOUT

STRUCTURES DESIGN DETAIL SHEET (ENGLISH) (REV. 09-01-10)

ORIGINAL SCALE IN INCHES FOR REDUCED PLANS 0 1 2 3

UNIT: 3578
PROJECT NUMBER & PHASE: 02120000121
CONTRACT NO.: 02-4E6504

DISREGARD PRINTS BEARING EARLIER REVISION DATES

REVISION DATES: 12-16-15 10-14-16 12-13-16 1-6-16

SHEET 6 OF 34

FILE => 02-0081-f-ab1o.dgn

USERNAME => s115152 DATE PLOTTED => 23-AUG-2016 TIME PLOTTED => 08:21

DIST	COUNTY	ROUTE	POST MILES TOTAL PROJECT	SHEET No.	TOTAL SHEETS
02	Sis	96	R52.5/88.4	181	208

Mufeed Khalaf 5-27-16
REGISTERED CIVIL ENGINEER DATE

06-15-16
PLANS APPROVAL DATE

REGISTERED PROFESSIONAL ENGINEER
Mufeed Khalaf
No. 54260
Exp. 12-31-17
CIVIL
STATE OF CALIFORNIA

The State of California or its officers or agents shall not be responsible for the accuracy or completeness of scanned copies of this plan sheet.

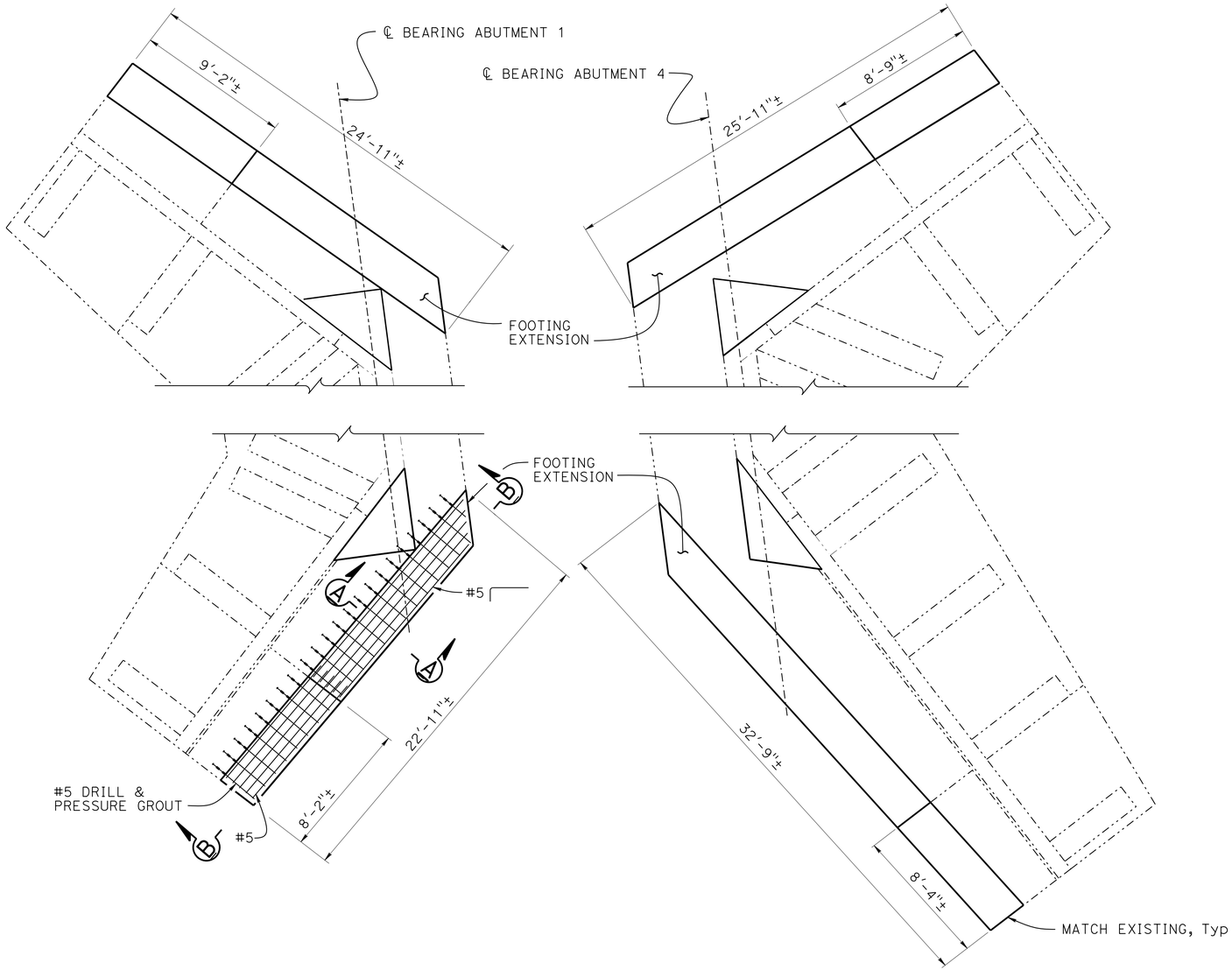

PART FOOTING PLAN

1/4" = 1'-0"

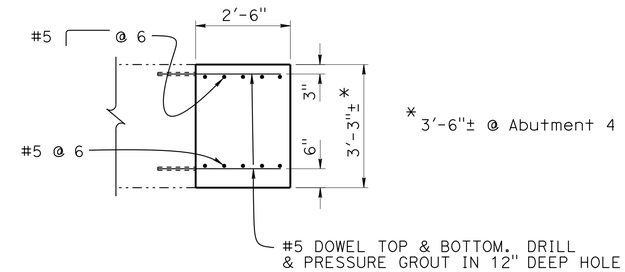

NOTE:
Reinforcement shown is typical at all footing extension locations

SECTION A-A

1/2" = 1'-0"

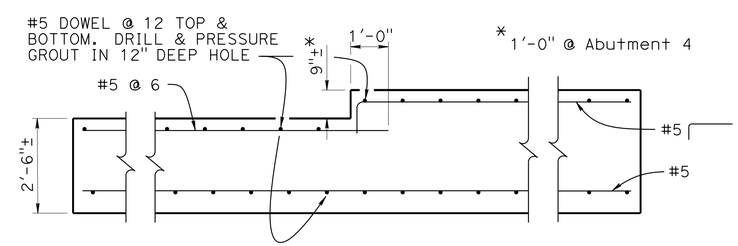

NOTE:
For details not shown, see "SECTION A-A"

SECTION B-B

1/2" = 1'-0"

NOTE:
THE CONTRACTOR MUST VERIFY ALL CONTROLLING FIELD DIMENSIONS BEFORE ORDERING OR FABRICATING ANY MATERIAL.

DESIGN	BY Mufeed Khalaf	CHECKED Arturo V Herrera	
DETAILS	BY Nancy C Gwynn	CHECKED Arturo V Herrera	
QUANTITIES	BY Eric G Burgeson	CHECKED Jose M Aquino III	

STATE OF CALIFORNIA
DEPARTMENT OF TRANSPORTATION

DIVISION OF ENGINEERING SERVICES
STRUCTURE DESIGN
DESIGN BRANCH 3

BRIDGE NO. 02-0081
POST MILE 88.26

BEAVER CREEK BRIDGE (WIDEN)
ABUTMENT DETAILS No. 1

STRUCTURES DESIGN DETAIL SHEET (ENGLISH) (REV. 09-01-10)

ORIGINAL SCALE IN INCHES FOR REDUCED PLANS 0 1 2 3

UNIT: 3578
PROJECT NUMBER & PHASE: 02120000121
CONTRACT NO.: 02-4E6504

DISREGARD PRINTS BEARING EARLIER REVISION DATES

REVISION DATES 1-15-15 10-22-15 11-23-15 12-28-15

SHEET 7 OF 34

FILE => 02-0081-g-adet01.dgn

USERNAME => s113152 DATE PLOTTED => 23-AUG-2016 TIME PLOTTED => 06:22

DIST	COUNTY	ROUTE	POST MILES TOTAL PROJECT	SHEET No.	TOTAL SHEETS
02	Sis	96	R52.5/88.4	182	208

Mufeed Khalaf 5-27-16
REGISTERED CIVIL ENGINEER DATE

06-15-16
PLANS APPROVAL DATE

REGISTERED PROFESSIONAL ENGINEER
Mufeed Khalaf
No. 54260
Exp. 12-31-17
CIVIL
STATE OF CALIFORNIA

The State of California or its officers or agents shall not be responsible for the accuracy or completeness of scanned copies of this plan sheet.

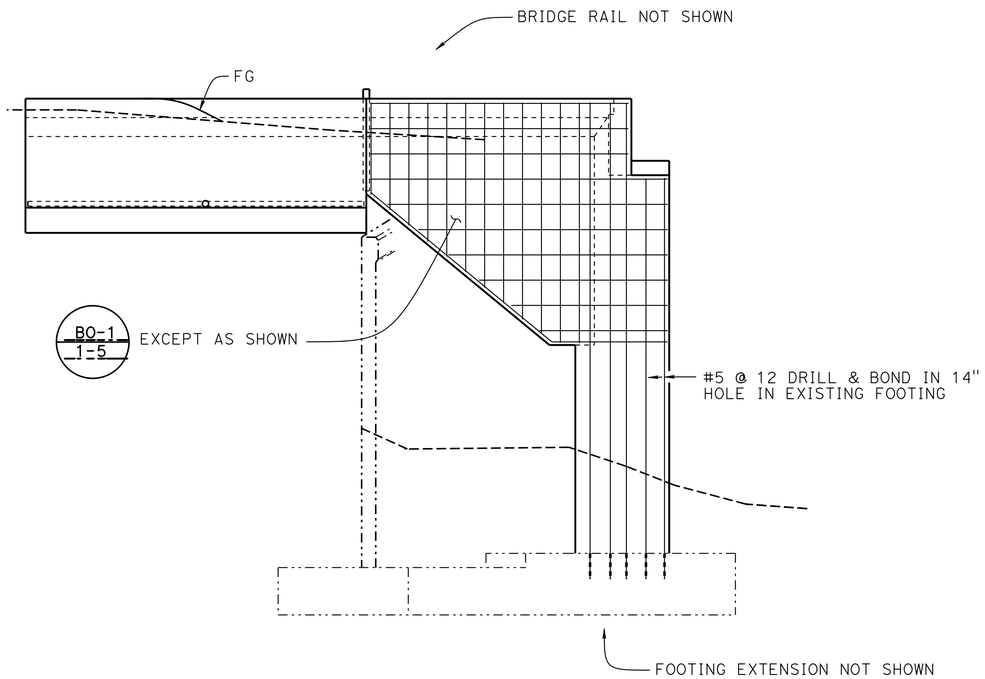

NOTE:
For Wingwall "L" dimension and details not shown, see "ABUTMENT DETAILS No. 7" and "ABUTMENT DETAILS No. 8" sheets

WINGWALL ELEVATION
1/4" = 1'-0"

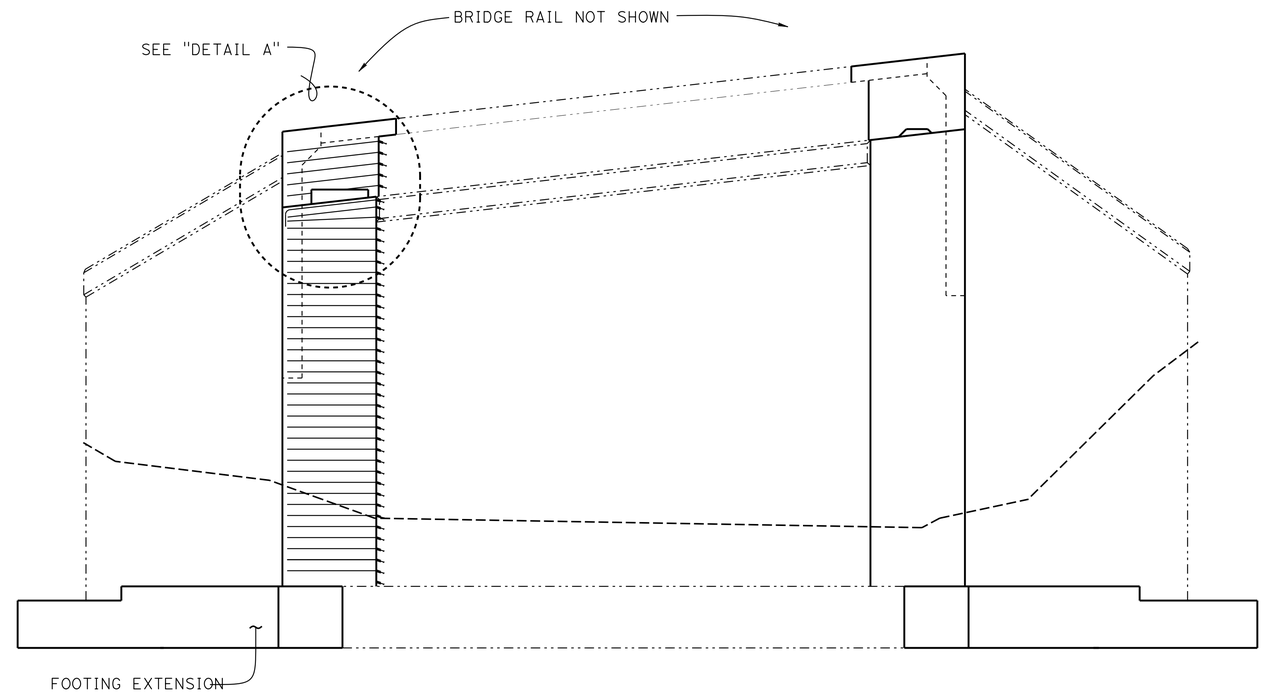

NOTES:
1. Superstructure not shown
2. Abutment 1 shown, Abutment 4 similar
3. For "DETAIL A", see "ABUTMENT DETAILS No. 4" sheet

ELEVATION
1/4" = 1'-0"

NOTE:
THE CONTRACTOR MUST VERIFY ALL CONTROLLING FIELD DIMENSIONS BEFORE ORDERING OR FABRICATING ANY MATERIAL.

	BY	CHECKED
DESIGN	Mufeed Khalaf	Arturo V Herrera
DETAILS	Nancy C Gwynn	Arturo V Herrera
QUANTITIES	Eric G Burgeson	Jose M Aquino III

STATE OF CALIFORNIA
DEPARTMENT OF TRANSPORTATION

DIVISION OF ENGINEERING SERVICES
STRUCTURE DESIGN
DESIGN BRANCH 3

BRIDGE NO. 02-0081
POST MILE 88.26

BEAVER CREEK BRIDGE (WIDEN)
ABUTMENT DETAILS No. 2

STRUCTURES DESIGN DETAIL SHEET (ENGLISH) (REV. 09-01-10)

ORIGINAL SCALE IN INCHES FOR REDUCED PLANS 0 1 2 3

UNIT: 3578
PROJECT NUMBER & PHASE: 02120000121
CONTRACT NO.: 02-4E6504

DISREGARD PRINTS BEARING EARLIER REVISION DATES

REVISION DATES 1-26-15 10-14-15 1-8-16 4-14-16

SHEET 8 OF 34

FILE => 02-0081-g-adet02.dgn

USERNAME => s115152 DATE PLOTTED => 23-AUG-2016 TIME PLOTTED => 06:22

DIST	COUNTY	ROUTE	POST MILES TOTAL PROJECT	SHEET No.	TOTAL SHEETS
02	Sis	96	R52.5/88.4	183	208

Mufeed Khalaf 5-27-16
REGISTERED CIVIL ENGINEER DATE

06-15-16
PLANS APPROVAL DATE

REGISTERED PROFESSIONAL ENGINEER Mufeed Khalaf No. 54260 Exp. 12-31-17 CIVIL STATE OF CALIFORNIA

The State of California or its officers or agents shall not be responsible for the accuracy or completeness of scanned copies of this plan sheet.

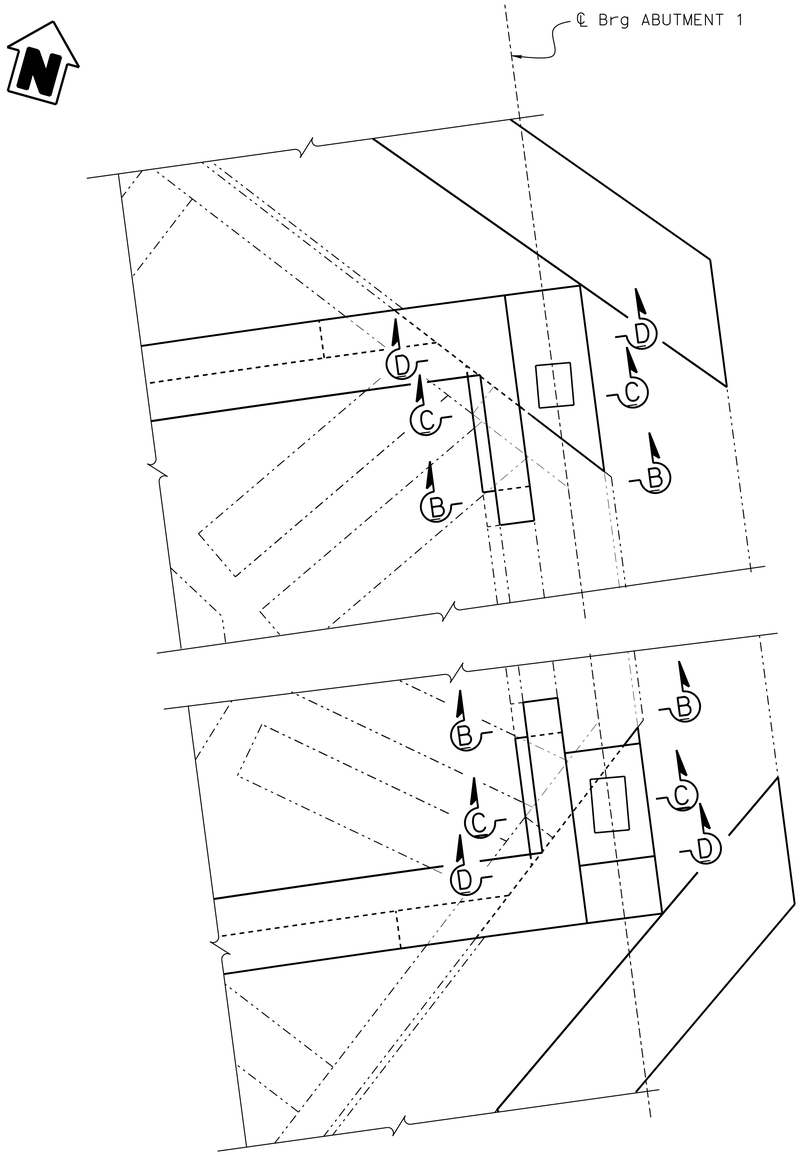

PART PLAN

½" = 1'-0"

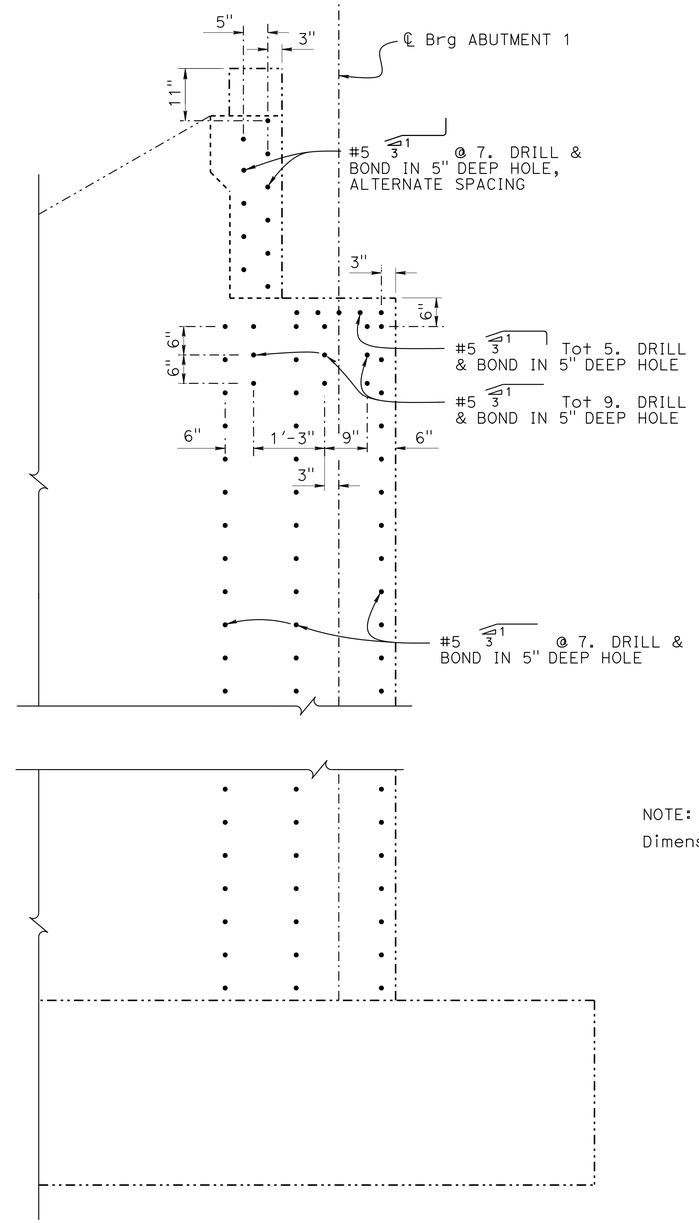

DRILL & BOND

¾" = 1'-0"

NOTE:
Dimensions are normal to ℄ Abutment

NOTE:
THE CONTRACTOR MUST VERIFY ALL CONTROLLING FIELD DIMENSIONS BEFORE ORDERING OR FABRICATING ANY MATERIAL.

NOTES:
1. Abutment 1 shown, Abutment 4 similar
2. For "SECTION B-B", "SECTION C-C" and "SECTION D-D" see "ABUTMENT DETAILS No. 4" sheet

	BY	CHECKED
DESIGN	Mufeed Khalaf	Arturo V Herrera
DETAILS	Nancy C Gwynn	Arturo V Herrera
QUANTITIES	Eric G Burgeson	Jose M Aquino III

STATE OF CALIFORNIA
DEPARTMENT OF TRANSPORTATION

DIVISION OF ENGINEERING SERVICES
STRUCTURE DESIGN
DESIGN BRANCH 3

BRIDGE NO. 02-0081
POST MILE 88.26

BEAVER CREEK BRIDGE (WIDEN)
ABUTMENT DETAILS No. 3

STRUCTURES DESIGN DETAIL SHEET (ENGLISH) (REV. 09-01-10)

ORIGINAL SCALE IN INCHES FOR REDUCED PLANS 0 1 2 3

UNIT: 3578
PROJECT NUMBER & PHASE: 02120000121
CONTRACT NO.: 02-4E6504

DISREGARD PRINTS BEARING EARLIER REVISION DATES

REVISION DATES 2-26-15 10-14-15 11-14-15 3-29-16

SHEET 9 OF 34

FILE => 02-0081-g-adet03.dgn

USERNAME => s115152 DATE PLOTTED => 23-AUG-2016 TIME PLOTTED => 08:22

DIST	COUNTY	ROUTE	POST MILES TOTAL PROJECT	SHEET No.	TOTAL SHEETS
02	Sis	96	R52.5/88.4	184	208

Mufeed Khalaf 5-27-16
REGISTERED CIVIL ENGINEER DATE

06-15-16
PLANS APPROVAL DATE

REGISTERED PROFESSIONAL ENGINEER Mufeed Khalaf No. 54260 Exp. 12-31-17 CIVIL STATE OF CALIFORNIA

The State of California or its officers or agents shall not be responsible for the accuracy or completeness of scanned copies of this plan sheet.

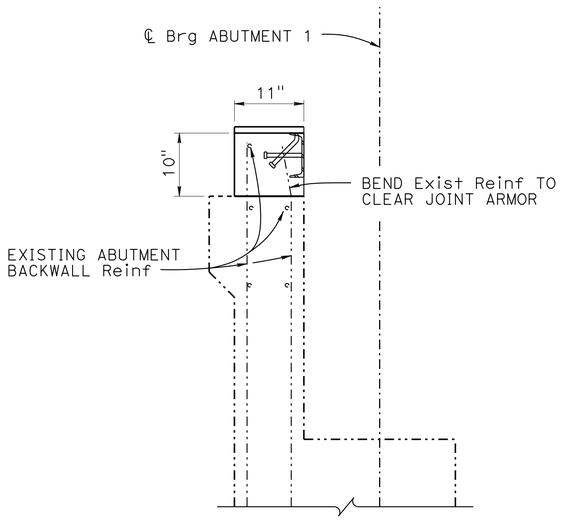

SECTION B-B

1" = 1'-0"

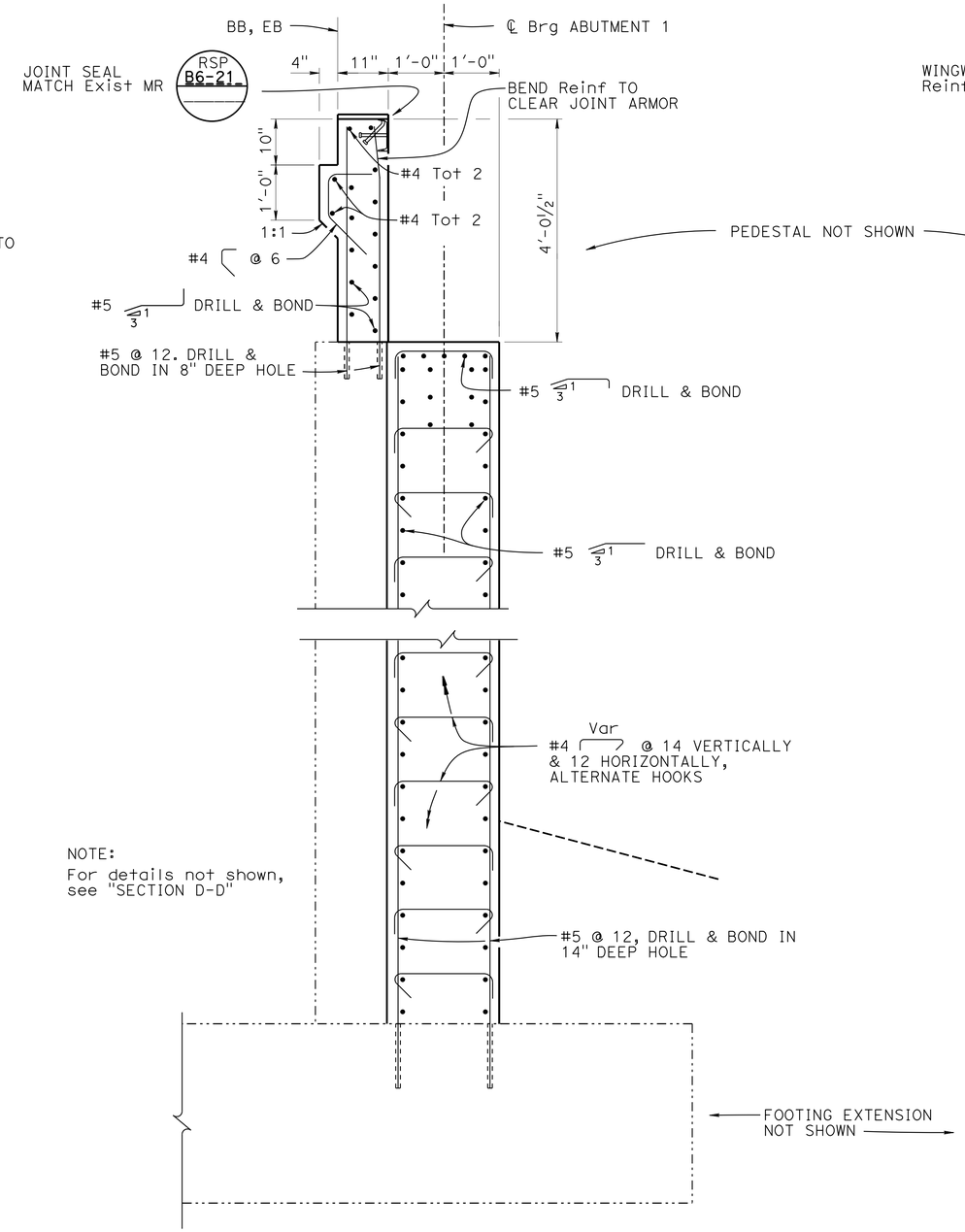

NOTE:
For details not shown, see "SECTION D-D"

SECTION C-C

3/4" = 1'-0"

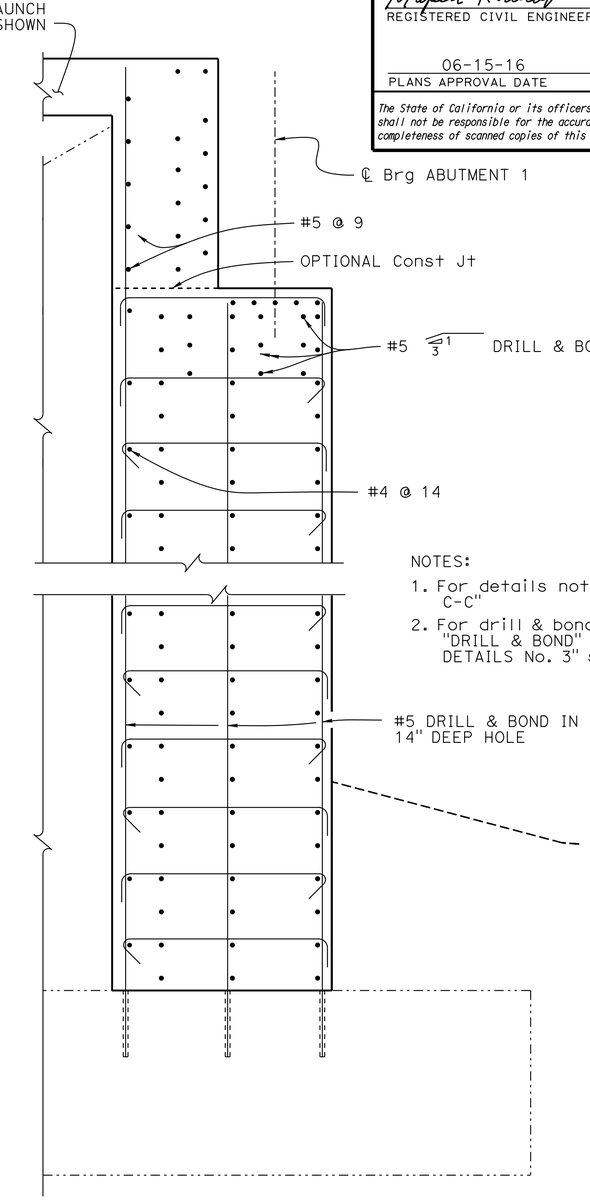

NOTES:
1. For details not shown, see "SECTION C-C"
2. For drill & bond bar location, see "DRILL & BOND" detail, "ABUTMENT DETAILS No. 3" sheet

SECTION D-D

3/4" = 1'-0"

NOTES:
1. For details not shown, see "SECTION E-E" and "SECTION F-F", ABUTMENT DETAILS No. 5" sheet
2. For joint armor details, see "JOINT SEAL DETAILS No. 1" sheet

NOTE:
THE CONTRACTOR MUST VERIFY ALL CONTROLLING FIELD DIMENSIONS BEFORE ORDERING OR FABRICATING ANY MATERIAL.

	BY	CHECKED
DESIGN	Mufeed Khalaf	Arturo V Herrera
DETAILS	Nancy C Gwynn	Arturo V Herrera
QUANTITIES	Eric G Burgeson	Jose M Aquino III

STATE OF CALIFORNIA
DEPARTMENT OF TRANSPORTATION

DIVISION OF ENGINEERING SERVICES
STRUCTURE DESIGN
DESIGN BRANCH 3

BRIDGE NO. 02-0081
POST MILE 88.26

BEAVER CREEK BRIDGE (WIDEN)
ABUTMENT DETAILS No. 4

STRUCTURES DESIGN DETAIL SHEET (ENGLISH) (REV. 09-01-10)

ORIGINAL SCALE IN INCHES FOR REDUCED PLANS 0 1 2 3

UNIT: 3578
PROJECT NUMBER & PHASE: 02120000121
CONTRACT NO.: 02-4E6504

DISREGARD PRINTS BEARING EARLIER REVISION DATES

REVISION DATES 1-20-16 11-18-16 12-7-16

SHEET 10 OF 34

FILE => 02-0081-g-adet04.dgn

USERNAME => s115152 DATE PLOTTED => 23-AUG-2016 TIME PLOTTED => 06:22

DIST	COUNTY	ROUTE	POST MILES TOTAL PROJECT	SHEET No.	TOTAL SHEETS
02	Sis	96	R52.5/88.4	185	208

Mufeed Khalaf 5-27-16
REGISTERED CIVIL ENGINEER DATE

06-15-16
PLANS APPROVAL DATE

REGISTERED PROFESSIONAL ENGINEER Mufeed Khalaf No. 54260 Exp. 12-31-17 CIVIL STATE OF CALIFORNIA

The State of California or its officers or agents shall not be responsible for the accuracy or completeness of scanned copies of this plan sheet.

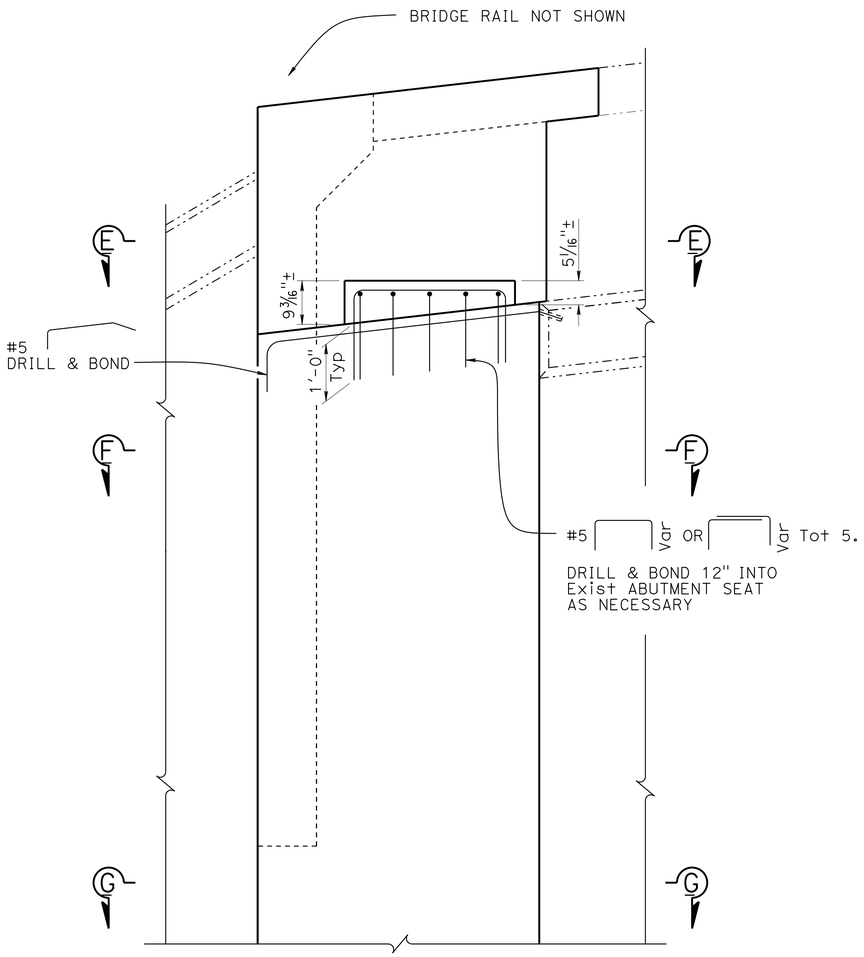

DETAIL A
3/4" = 1'-0"

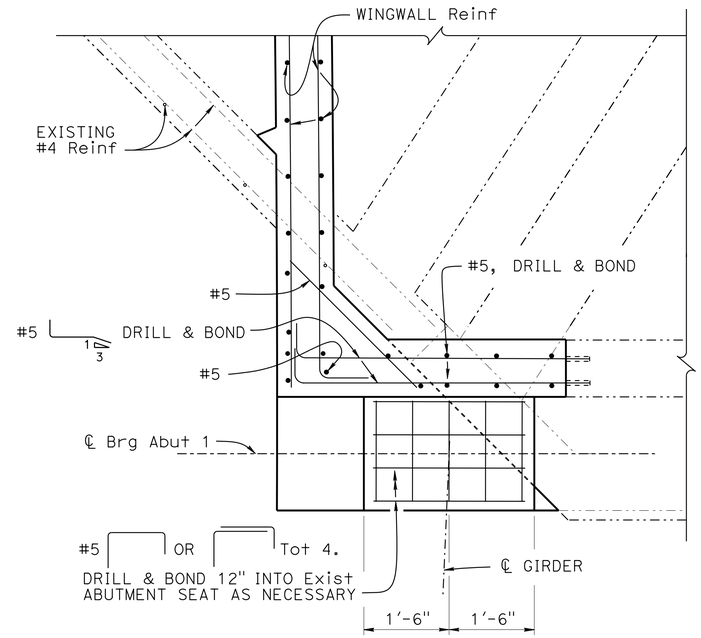

NOTE:
For details not shown, see "SECTION F-F"

SECTION E-E
3/4" = 1'-0"

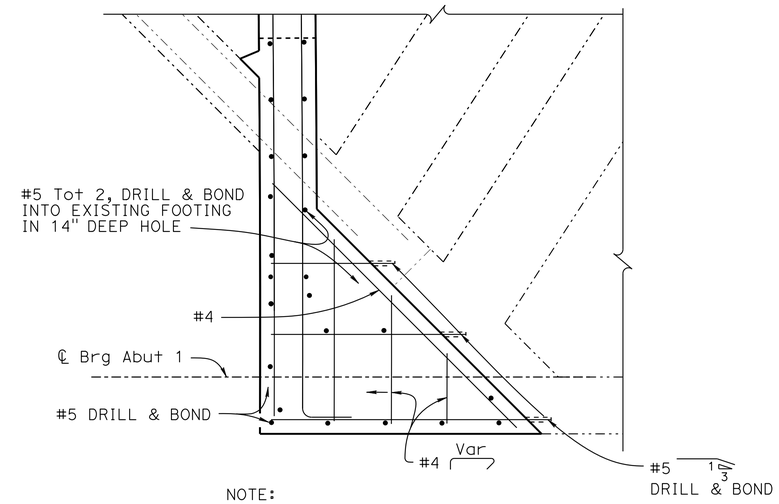

NOTE:
For details not shown, see "SECTION E-E"

SECTION F-F
3/4" = 1'-0"

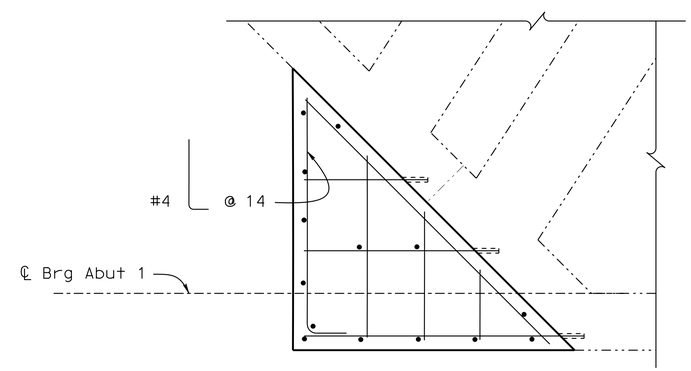

NOTE:
For details not shown, see "SECTION F-F"

SECTION G-G
3/4" = 1'-0"

NOTE:
Pedestal details for right side of abutment only

NOTE:
THE CONTRACTOR MUST VERIFY ALL CONTROLLING FIELD DIMENSIONS BEFORE ORDERING OR FABRICATING ANY MATERIAL.

	BY	CHECKED
DESIGN	Mufeed Khalaf	Arturo V Herrera
DETAILS	Nancy C Gwynn	Arturo V Herrera
QUANTITIES	Eric G Burgeson	Jose M Aquino III

STATE OF CALIFORNIA
DEPARTMENT OF TRANSPORTATION

DIVISION OF ENGINEERING SERVICES
STRUCTURE DESIGN
DESIGN BRANCH 3

BRIDGE NO. 02-0081
POST MILE 88.26

BEAVER CREEK BRIDGE (WIDEN)
ABUTMENT DETAILS No. 5

STRUCTURES DESIGN DETAIL SHEET (ENGLISH) (REV. 09-01-10)

ORIGINAL SCALE IN INCHES FOR REDUCED PLANS 0 1 2 3

UNIT: 3578
PROJECT NUMBER & PHASE: 02120000121
CONTRACT NO.: 02-4E6504

DISREGARD PRINTS BEARING EARLIER REVISION DATES

REVISION DATES 12-16-15 12-7-15 11-13-15

SHEET 11 OF 34

FILE => 02-0081-g-adet05.dgn

USERNAME => s115152 DATE PLOTTED => 23-AUG-2016 TIME PLOTTED => 06:22

DIST	COUNTY	ROUTE	POST MILES TOTAL PROJECT	SHEET No.	TOTAL SHEETS
02	Sis	96	R52.5/88.4	186	208

Mufeed Khalaf 5-27-16
REGISTERED CIVIL ENGINEER DATE

06-15-16
PLANS APPROVAL DATE

REGISTERED PROFESSIONAL ENGINEER
Mufeed Khalaf
No. 54260
Exp. 12-31-17
CIVIL
STATE OF CALIFORNIA

The State of California or its officers or agents shall not be responsible for the accuracy or completeness of scanned copies of this plan sheet.

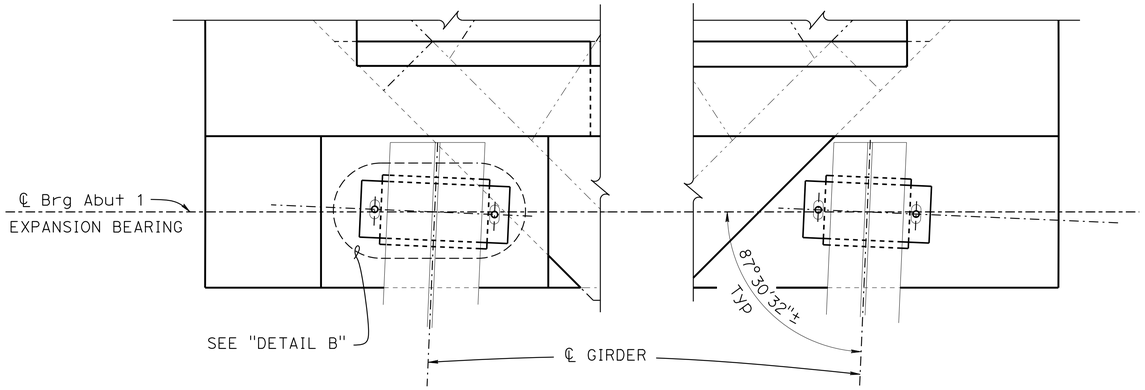

PART PLAN - ABUTMENT 1

1" = 1'-0"

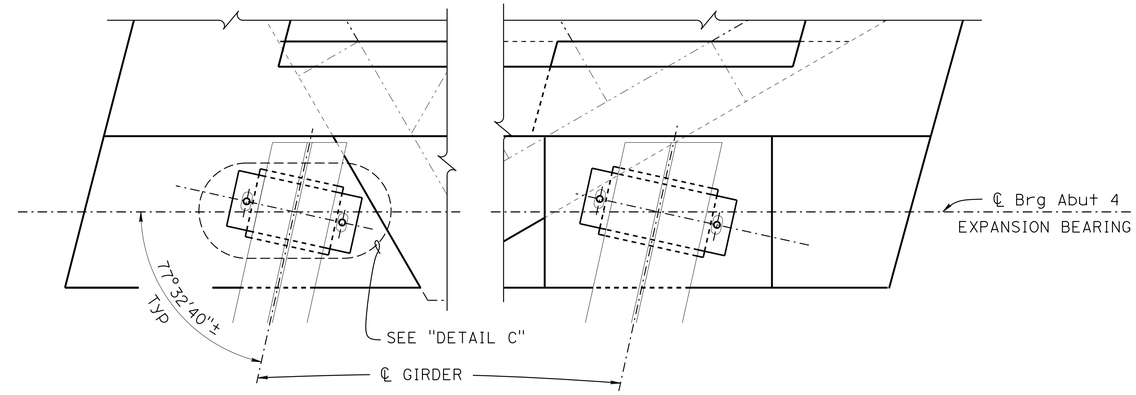

PART PLAN - ABUTMENT 4

1" = 1'-0"

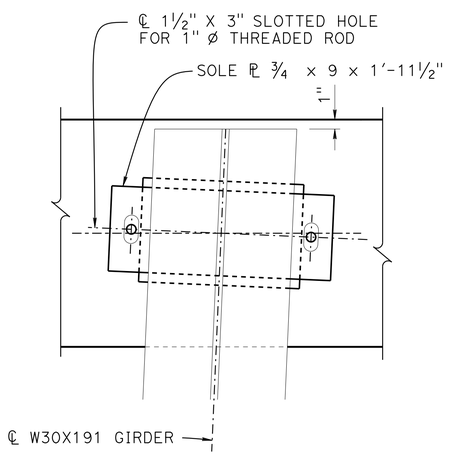

DETAIL B

1½" = 1'-0"

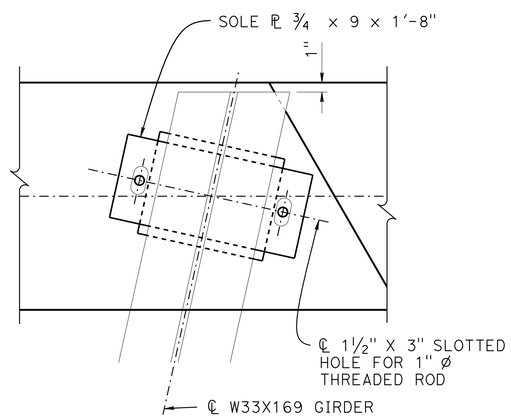

DETAIL C

1½" = 1'-0"

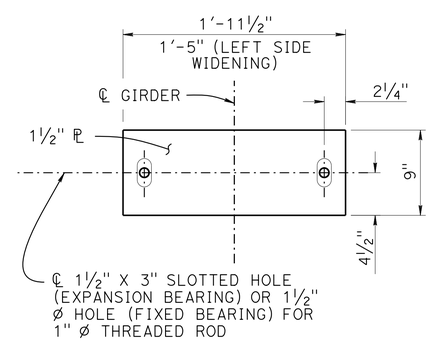

SOLE PLATE

1½" = 1'-0"

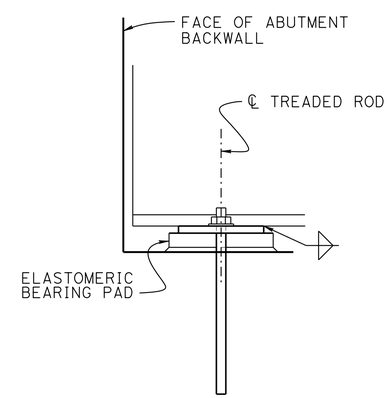

SECTION H-H

1½" = 1'-0"

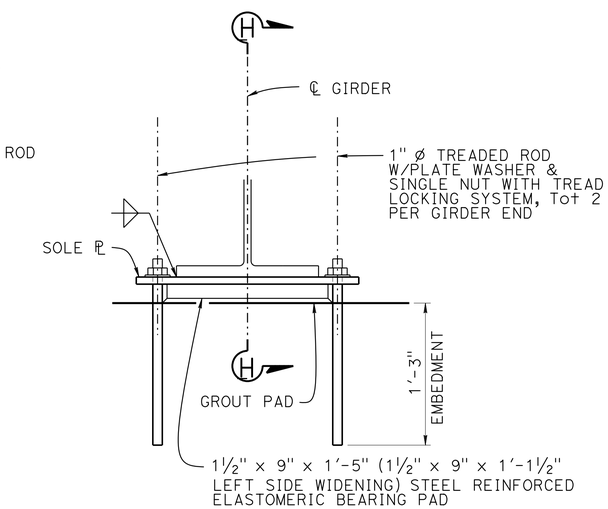

NOTE:
Right side widening shown, left side similar except as noted

BEARING PAD DETAIL

1½" = 1'-0"

NOTE:
THE CONTRACTOR MUST VERIFY ALL CONTROLLING FIELD DIMENSIONS BEFORE ORDERING OR FABRICATING ANY MATERIAL.

	BY	CHECKED
DESIGN	Mufeed Khalaf	Arturo V Herrera
DETAILS	Nancy C Gwynn	Arturo V Herrera
QUANTITIES	Eric G Burgeson	Jose M Aquino III

STATE OF CALIFORNIA
DEPARTMENT OF TRANSPORTATION

DIVISION OF ENGINEERING SERVICES
STRUCTURE DESIGN
DESIGN BRANCH 3

BRIDGE NO. 02-0081
POST MILE 88.26

BEAVER CREEK BRIDGE (WIDEN)
ABUTMENT DETAILS No. 6

STRUCTURES DESIGN DETAIL SHEET (ENGLISH) (REV. 09-01-10)

ORIGINAL SCALE IN INCHES FOR REDUCED PLANS 0 1 2 3

UNIT: 3578
PROJECT NUMBER & PHASE: 02120000121
CONTRACT NO.: 02-4E6504

DISREGARD PRINTS BEARING EARLIER REVISION DATES

REVISION DATES 11-30-12 02-03-16 11-22-16

SHEET 12 OF 34

FILE => 02-0081-g-adet06.dgn

USERNAME => s115152 DATE PLOTTED => 23-AUG-2016 TIME PLOTTED => 06:22

DIST	COUNTY	ROUTE	POST MILES TOTAL PROJECT	SHEET No.	TOTAL SHEETS
02	Sis	96	R52.5/88.4	187	208

Mufeed Khalaf 5-27-16
REGISTERED CIVIL ENGINEER DATE

06-15-16
PLANS APPROVAL DATE

REGISTERED PROFESSIONAL ENGINEER Mufeed Khalaf No. 54260 Exp. 12-31-17 CIVIL STATE OF CALIFORNIA

The State of California or its officers or agents shall not be responsible for the accuracy or completeness of scanned copies of this plan sheet.

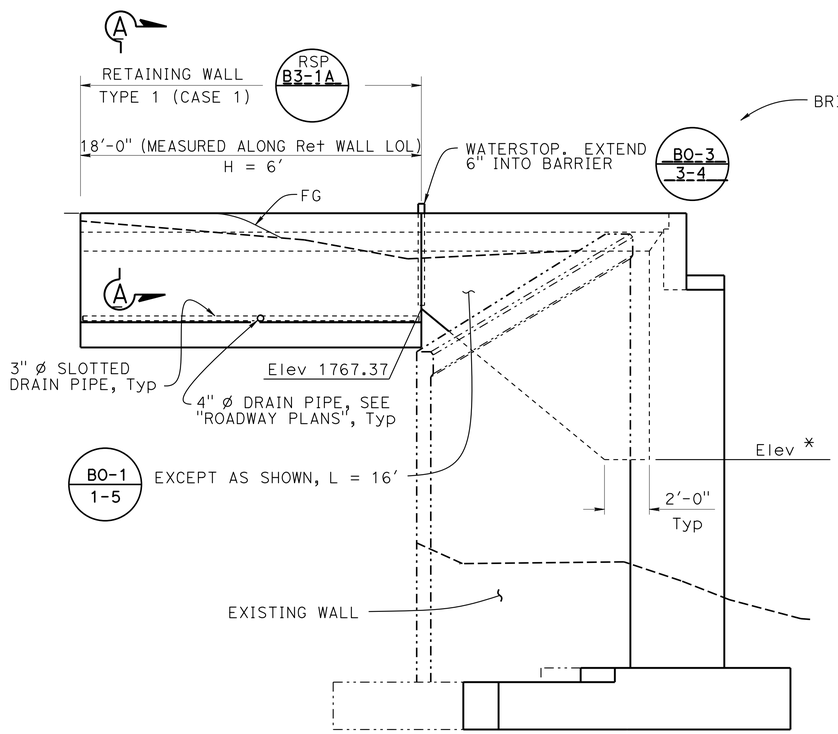

Abut 1 - RIGHT SIDE Ret WALL TYPE WINGWALL

1/4" = 1'-0"

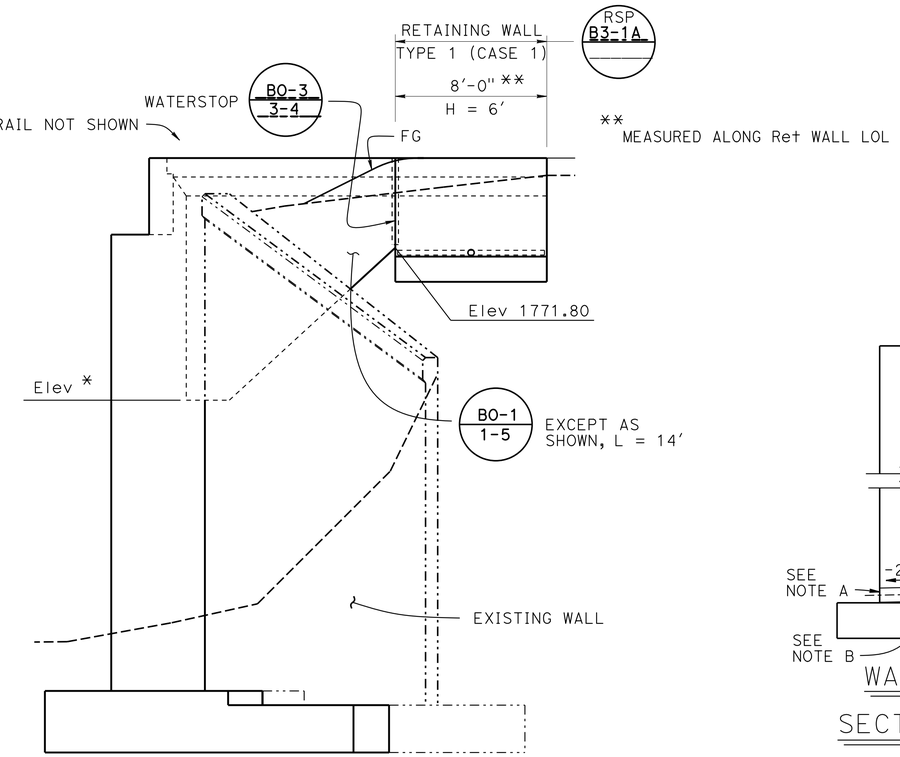

Abut 1 - LEFT SIDE Ret WALL TYPE WINGWALL

1/4" = 1'-0"

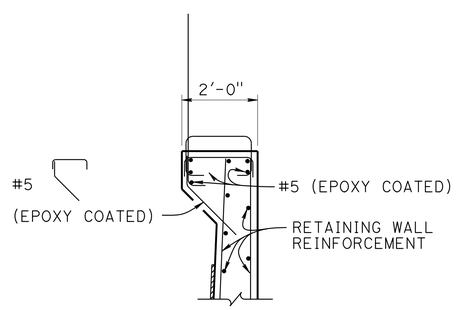

SECTION A-A

1/2" = 1'-0"

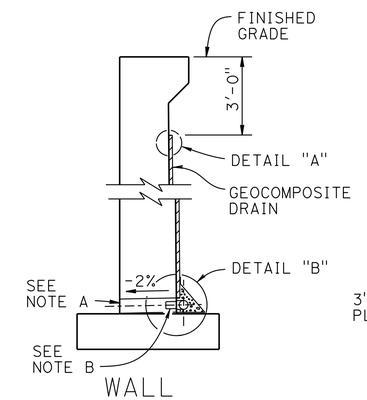

WALL SECTION

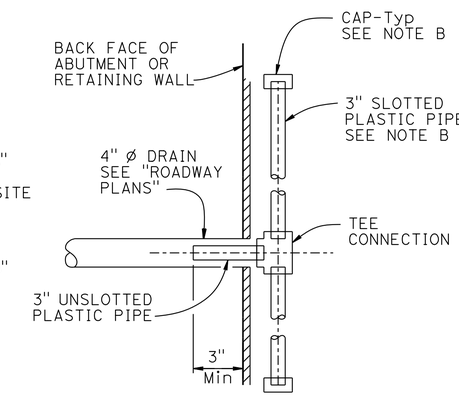

SECTION A-A

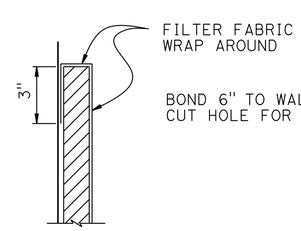

DETAIL "A"

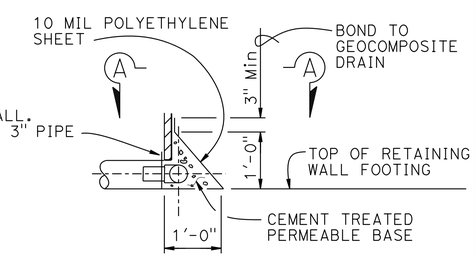

DETAIL "B"

WEEP HOLE AND GEOCOMPOSITE DRAIN

IN LIEU OF BO-3 / 3-1

Notes:

A. 4" Ø drains at intermediate sag points and at 25' max center to center (9' c-c for Type 3 and 9'-3" c-c for Type 4 retaining walls).
For walls adjacent to sidewalks or curbs, provide 4" Ø plastic pipe under the sidewalk to discharge through curb face.

B. Geocomposite drain, cement treated permeable base, and 3" Ø slotted plastic pipe continuous behind retaining wall or abutment. Cap ends of pipe. Provide "Tee" connection at each 4" Ø drain.

C. Connect the low end of plastic pipe to the main outlet pipe as applicable.

LEGEND:
*For elevation see "BRIDGE REMOVAL (PORTION) Det No. 2" sheet

NOTE:
For details not shown see "ABUTMENT LAYOUT" sheet

NOTE:
THE CONTRACTOR MUST VERIFY ALL CONTROLLING FIELD DIMENSIONS BEFORE ORDERING OR FABRICATING ANY MATERIAL.

	BY	CHECKED
DESIGN	Mufeed Khalaf	Arturo V Herrera
DETAILS	Nancy C Gwynn	Arturo V Herrera
QUANTITIES	Eric G Burgeson	Jose M Aquino III

STATE OF CALIFORNIA
DEPARTMENT OF TRANSPORTATION

DIVISION OF ENGINEERING SERVICES
STRUCTURE DESIGN
DESIGN BRANCH 3

BRIDGE NO. 02-0081
POST MILE 88.26

BEAVER CREEK BRIDGE (WIDEN)
ABUTMENT DETAILS No. 7

STRUCTURES DESIGN DETAIL SHEET (ENGLISH) (REV. 09-01-10)

ORIGINAL SCALE IN INCHES FOR REDUCED PLANS 0 1 2 3

UNIT: 3578
PROJECT NUMBER & PHASE: 02120000121
CONTRACT NO.: 02-4E6504

DISREGARD PRINTS BEARING EARLIER REVISION DATES

REVISION DATES 2-2-12 1-13-16 4-14-16

SHEET 13 OF 34

FILE => 02-0081-g-adet07.dgn

USERNAME => s115152 DATE PLOTTED => 23-AUG-2016 TIME PLOTTED => 06:22

DIST	COUNTY	ROUTE	POST MILES TOTAL PROJECT	SHEET No.	TOTAL SHEETS
02	Sis	96	R52.5/88.4	188	208

Mufeed Khalaf 5-27-16
REGISTERED CIVIL ENGINEER DATE

06-15-16
PLANS APPROVAL DATE

REGISTERED PROFESSIONAL ENGINEER
Mufeed Khalaf
No. 54260
Exp. 12-31-17
CIVIL
STATE OF CALIFORNIA

The State of California or its officers or agents shall not be responsible for the accuracy or completeness of scanned copies of this plan sheet.

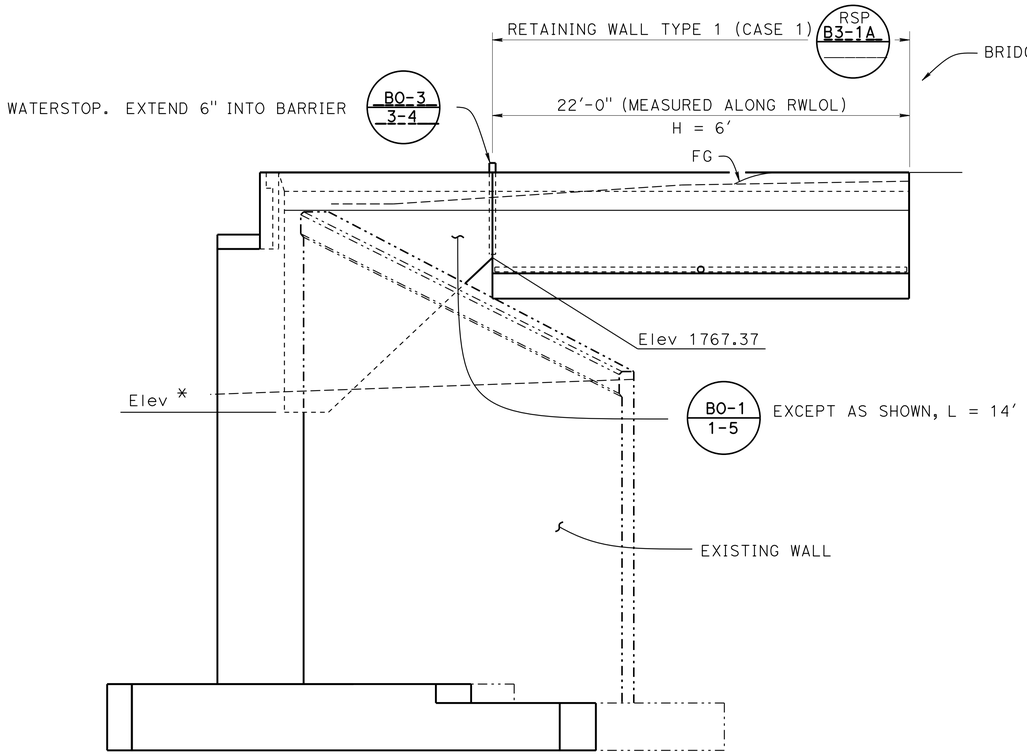

Abut 4 - RIGHT SIDE Ret WALL TYPE WINGWALL

1/4" = 1'-0"

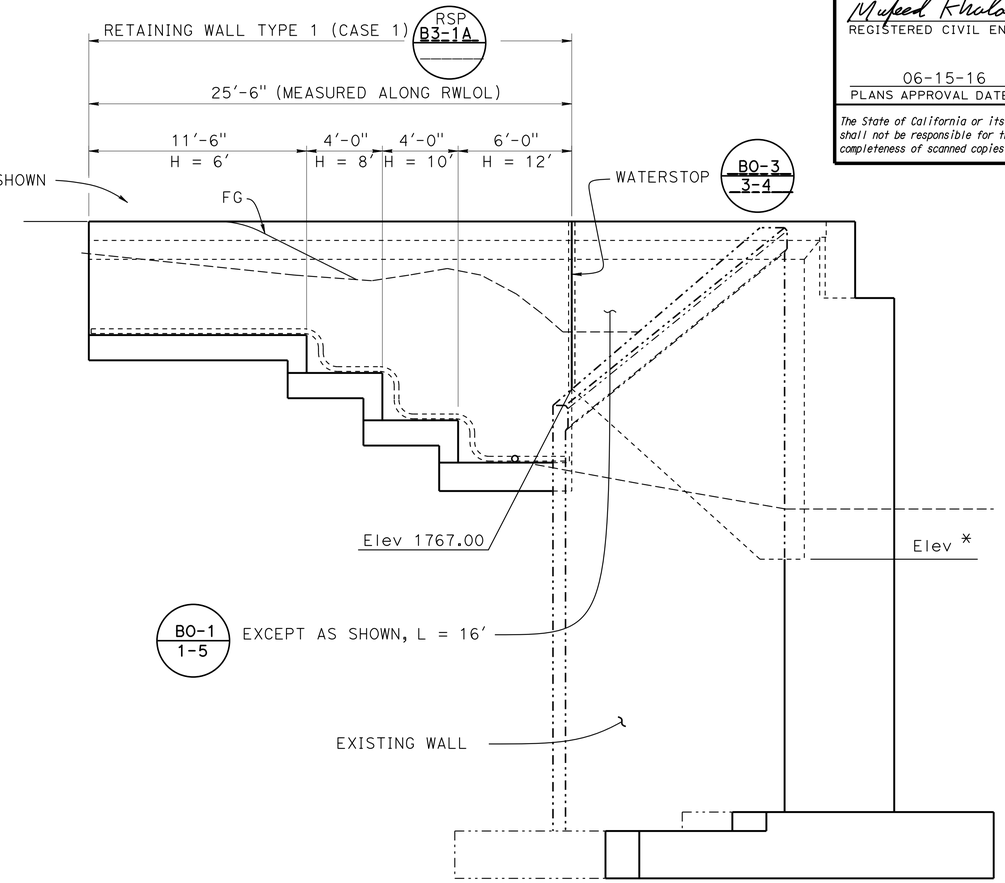

Abut 4 - LEFT SIDE Ret WALL TYPE WINGWALL

1/4" = 1'-0"

LEGEND:

* For elevation see "BRIDGE REMOVAL (PORTION) Det No. 2" sheet

NOTE:

For details not shown see "ABUTMENT DETAILS No. 7" and "ABUTMENT LAYOUT" sheets

NOTE:
THE CONTRACTOR MUST VERIFY ALL CONTROLLING FIELD DIMENSIONS BEFORE ORDERING OR FABRICATING ANY MATERIAL.

	BY	CHECKED
DESIGN	Mufeed Khalaf	Arturo V Herrera
DETAILS	Nancy C Gwynn	Arturo V Herrera
QUANTITIES	Eric G Burgeson	Jose M Aquino III

STATE OF CALIFORNIA
DEPARTMENT OF TRANSPORTATION

DIVISION OF ENGINEERING SERVICES
STRUCTURE DESIGN
DESIGN BRANCH 3

BRIDGE NO. 02-0081
POST MILE 88.26

BEAVER CREEK BRIDGE (WIDEN)
ABUTMENT DETAILS No. 8

STRUCTURES DESIGN DETAIL SHEET (ENGLISH) (REV. 09-01-10)

ORIGINAL SCALE IN INCHES FOR REDUCED PLANS 0 1 2 3

UNIT: 3578
PROJECT NUMBER & PHASE: 02120000121
CONTRACT NO.: 02-4E6504

DISREGARD PRINTS BEARING EARLIER REVISION DATES

REVISION DATES 1-12-12 1-13-16 4-14-16

SHEET 14 OF 34

FILE => 02-0081-g-adet08.dgn

USERNAME => s115152 DATE PLOTTED => 23-AUG-2016 TIME PLOTTED => 06:22

DIST	COUNTY	ROUTE	POST MILES TOTAL PROJECT	SHEET No.	TOTAL SHEETS
02	Sis	96	R52.5/88.4	189	208

Mufeed Khalaf 5-27-16
REGISTERED CIVIL ENGINEER DATE

06-15-16
PLANS APPROVAL DATE

REGISTERED PROFESSIONAL ENGINEER
Mufeed Khalaf
No. 54260
Exp. 12-31-17
CIVIL
STATE OF CALIFORNIA

The State of California or its officers or agents shall not be responsible for the accuracy or completeness of scanned copies of this plan sheet.

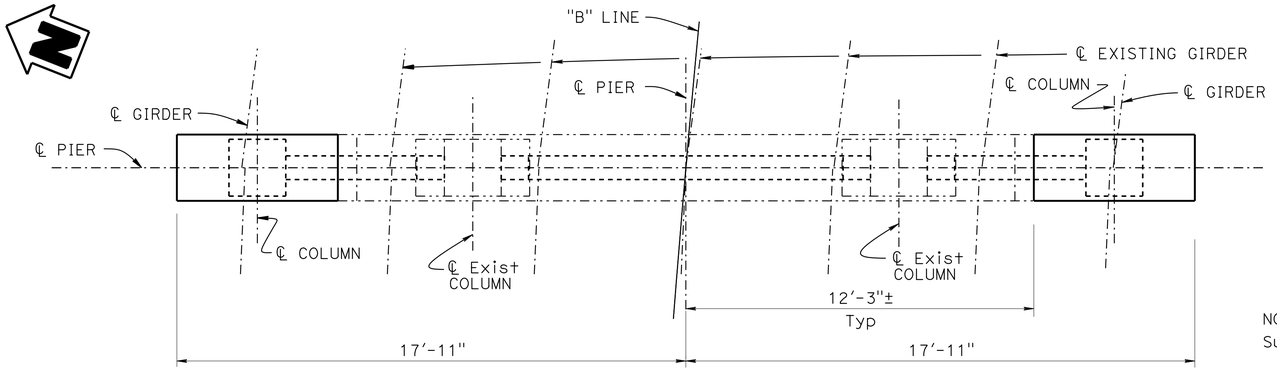

PLAN
3/8" = 1'-0"

NOTE:
Superstructure not shown

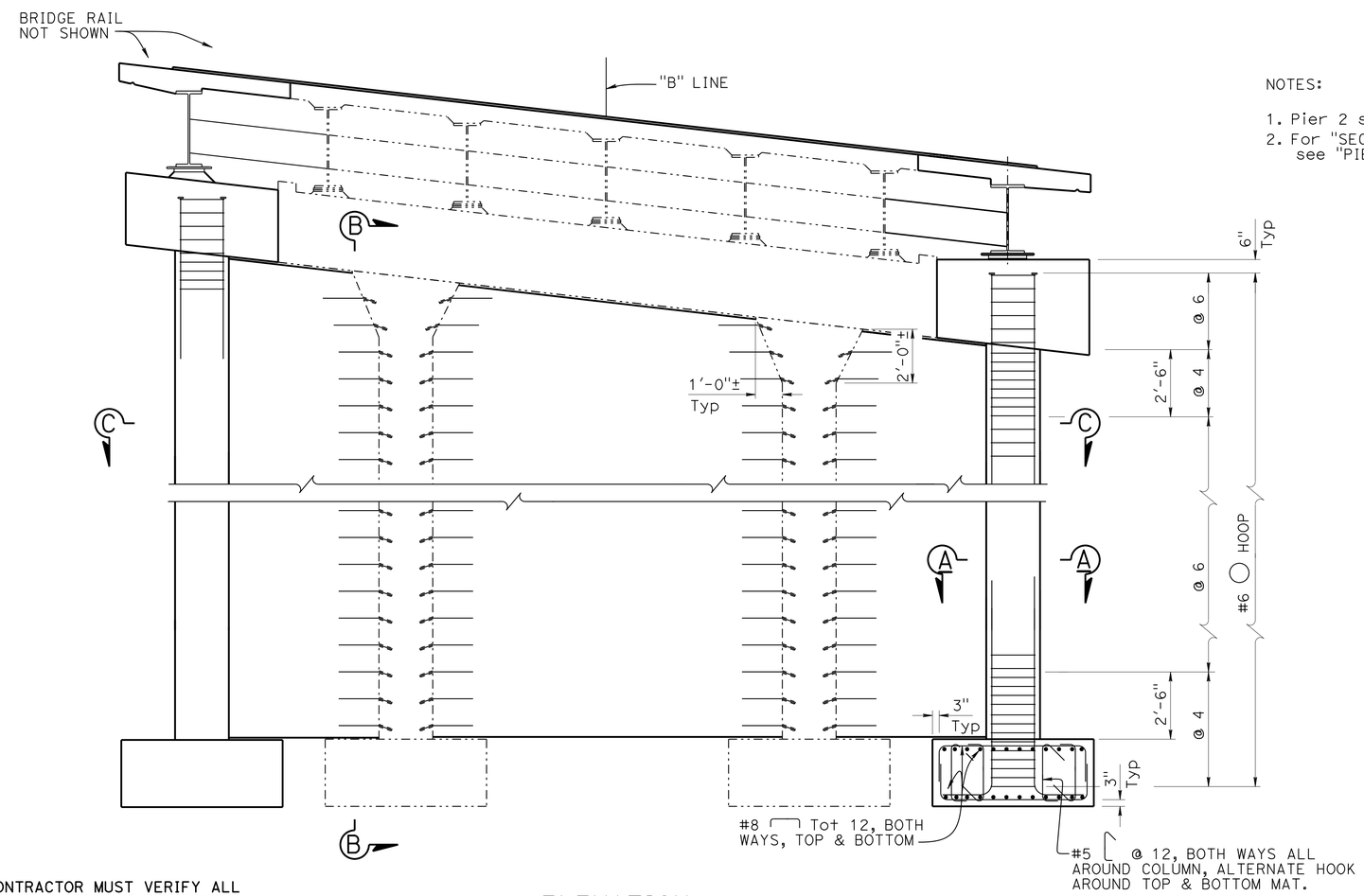

NOTES:

1. Pier 2 shown, Pier 3 similar
2. For "SECTION B-B" and "SECTION C-C", see "PIER DETAILS No. 2" sheet

NOTE:
THE CONTRACTOR MUST VERIFY ALL CONTROLLING FIELD DIMENSIONS BEFORE ORDERING OR FABRICATING ANY MATERIAL.

ELEVATION
3/8" = 1'-0"

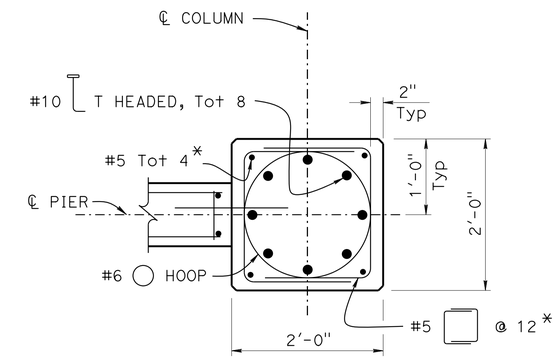

*Do not extend into cap or footing

NOTE:
For details not shown, see "SECTION C-C"

SECTION A-A
1" = 1'-0"

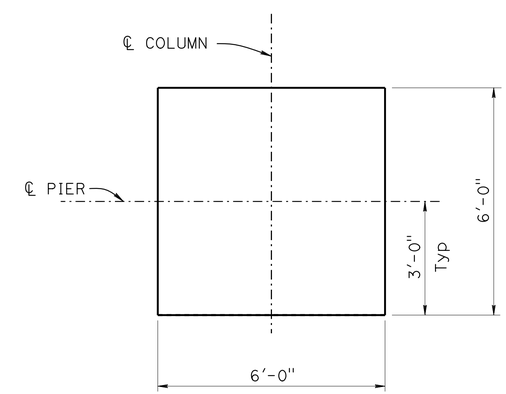

FOOTING PLAN
1/2" = 1'-0"

DESIGN	BY Mufeed Khalaf	CHECKED Arturo V Herrera	
DETAILS	BY Nancy C Gwynn	CHECKED Arturo V Herrera	
QUANTITIES	BY Eric G Burgeson	CHECKED Jose M Aquino III	

STATE OF CALIFORNIA
DEPARTMENT OF TRANSPORTATION

DIVISION OF ENGINEERING SERVICES
STRUCTURE DESIGN
DESIGN BRANCH 3

BRIDGE NO. 02-0081
POST MILE 88.26

BEAVER CREEK BRIDGE (WIDEN)
PIER DETAILS No. 1

STRUCTURES DESIGN DETAIL SHEET (ENGLISH) (REV. 09-01-10)

ORIGINAL SCALE IN INCHES FOR REDUCED PLANS 0 1 2 3

UNIT: 3578
PROJECT NUMBER & PHASE: 02120000121
CONTRACT NO.: 02-4E6504

DISREGARD PRINTS BEARING EARLIER REVISION DATES

REVISION DATES 11-12-15 11-02-15

SHEET 15 OF 34

FILE => 02-0081-1-prdet01.dgn

USERNAME => s115152 DATE PLOTTED => 23-AUG-2016 TIME PLOTTED => 06:22

DIST	COUNTY	ROUTE	POST MILES TOTAL PROJECT	SHEET No.	TOTAL SHEETS
02	Sis	96	R52.5/88.4	190	208

Mufeed Khalaf 5-27-16
REGISTERED CIVIL ENGINEER DATE

06-15-16
PLANS APPROVAL DATE

REGISTERED PROFESSIONAL ENGINEER
Mufeed Khalaf
No. 54260
Exp. 12-31-17
CIVIL
STATE OF CALIFORNIA

The State of California or its officers or agents shall not be responsible for the accuracy or completeness of scanned copies of this plan sheet.

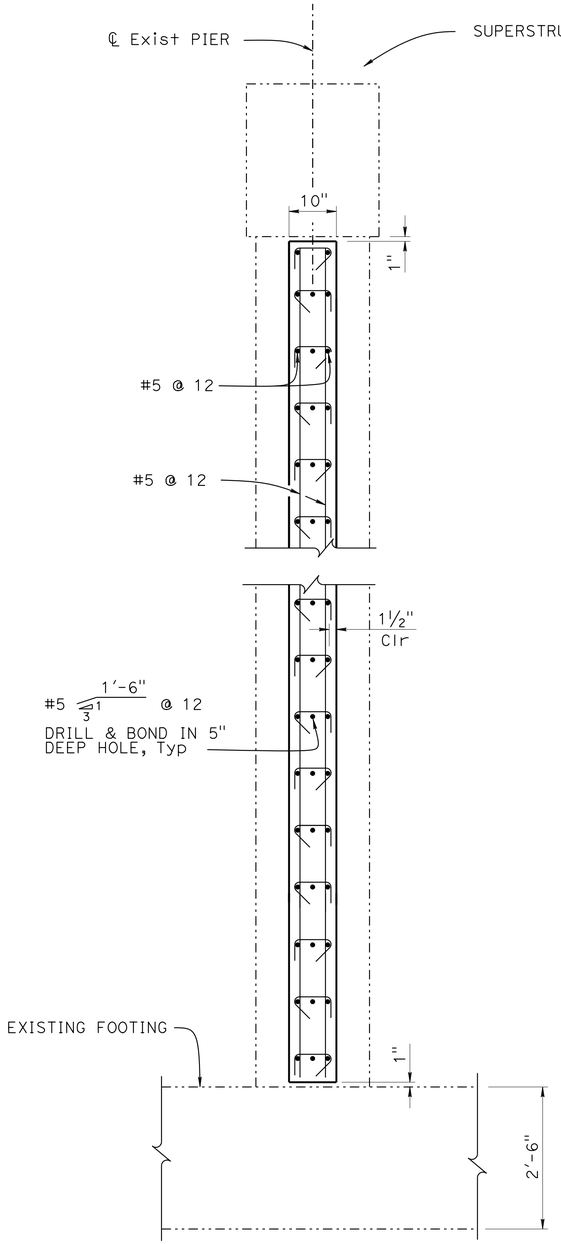

SECTION B-B

¾" = 1'-0"

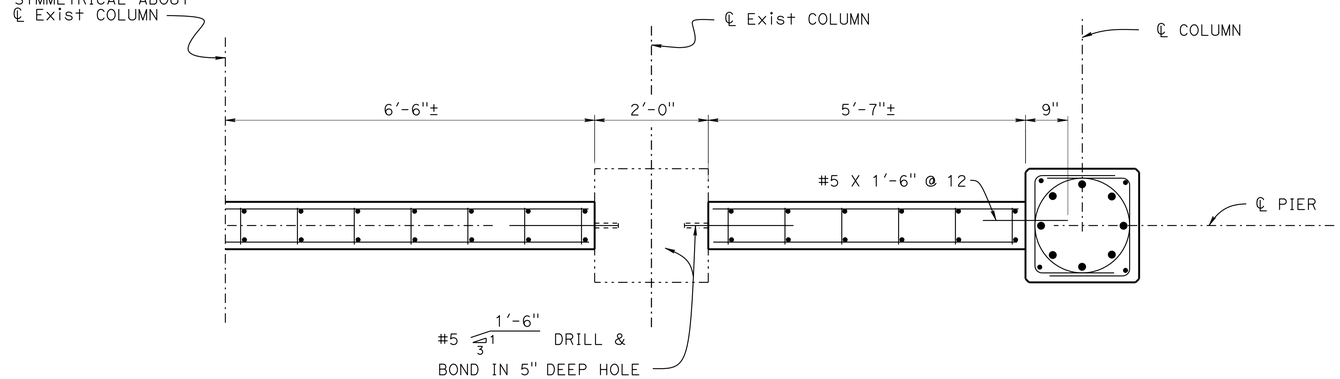

SECTION C-C

¾" = 1'-0"

NOTE:
THE CONTRACTOR MUST VERIFY ALL CONTROLLING FIELD DIMENSIONS BEFORE ORDERING OR FABRICATING ANY MATERIAL.

	BY	CHECKED
DESIGN	Mufeed Khalaf	Arturo V Herrera
DETAILS	Nancy C Gwynn	Arturo V Herrera
QUANTITIES	Eric G Burgeson	Jose M Aquino III

STATE OF CALIFORNIA
DEPARTMENT OF TRANSPORTATION

DIVISION OF ENGINEERING SERVICES
STRUCTURE DESIGN
DESIGN BRANCH 3

BRIDGE NO. 02-0081
POST MILE 88.26

BEAVER CREEK BRIDGE (WIDEN)
PIER DETAILS No. 2

STRUCTURES DESIGN DETAIL SHEET (ENGLISH) (REV. 09-01-10)

ORIGINAL SCALE IN INCHES FOR REDUCED PLANS 0 1 2 3

UNIT: 3578
PROJECT NUMBER & PHASE: 02120000121
CONTRACT NO.: 02-4E6504

DISREGARD PRINTS BEARING EARLIER REVISION DATES

REVISION DATES: 10-25-15 11-02-15

SHEET 16 OF 34

FILE => 02-0081-1-prdet02.dgn

USERNAME => s115152 DATE PLOTTED => 23-AUG-2016 TIME PLOTTED => 08:22

DIST	COUNTY	ROUTE	POST MILES TOTAL PROJECT	SHEET No.	TOTAL SHEETS
02	Sis	96	R52.5/88.4	191	208

Mufeed Khalaf 5-27-16
REGISTERED CIVIL ENGINEER DATE

06-15-16
PLANS APPROVAL DATE

REGISTERED PROFESSIONAL ENGINEER Mufeed Khalaf No. 54260 Exp. 12-31-17 CIVIL STATE OF CALIFORNIA

The State of California or its officers or agents shall not be responsible for the accuracy or completeness of scanned copies of this plan sheet.

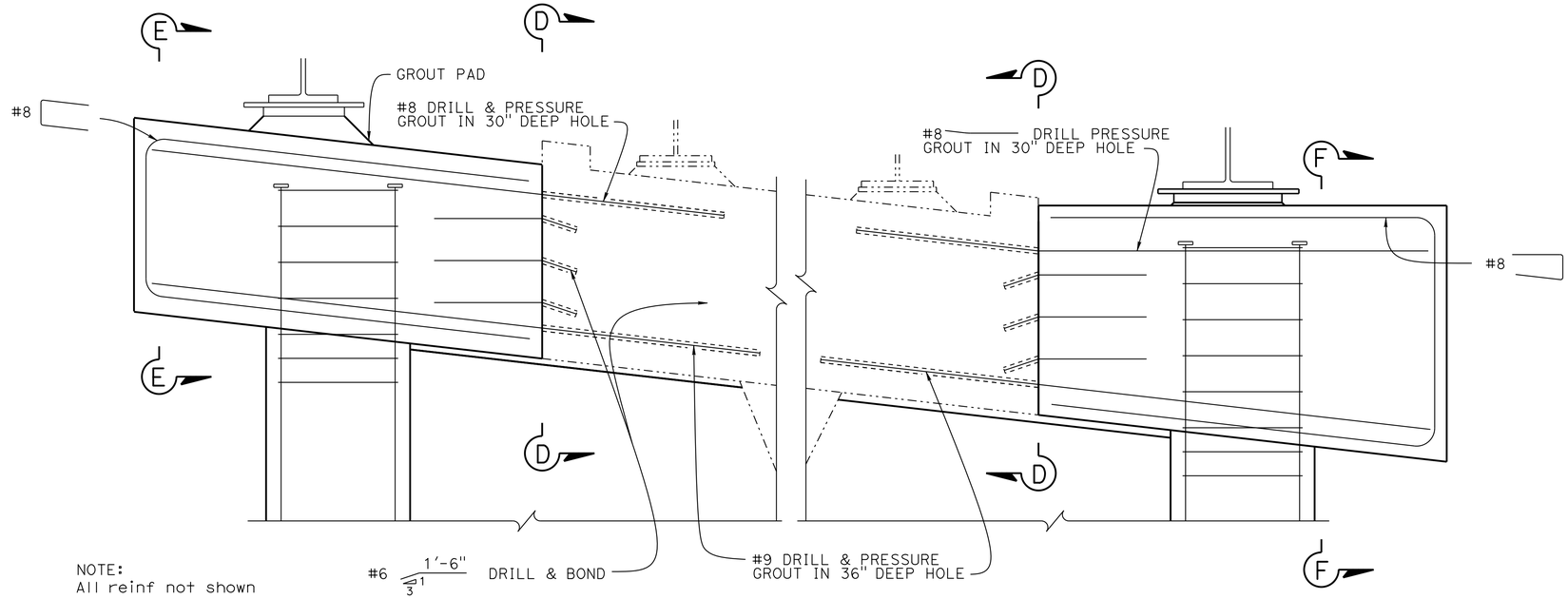

NOTE:
All reinf not shown

PART ELEVATION
1" = 1'-0"

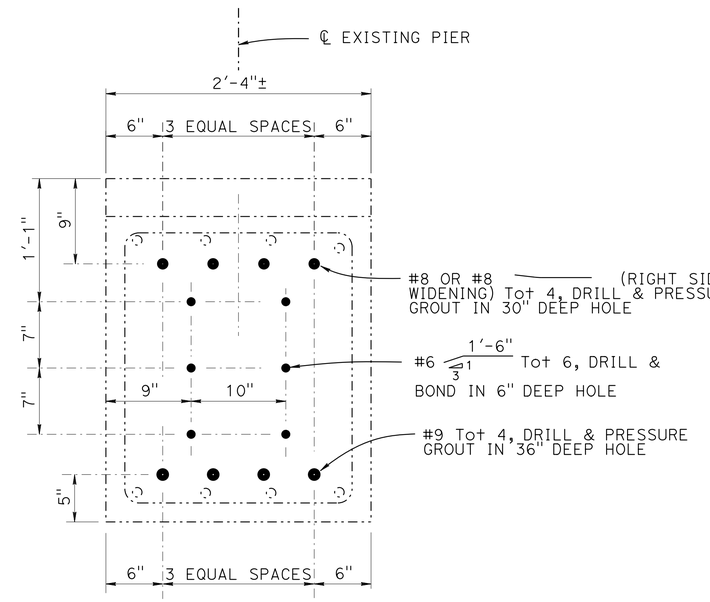

NOTE:
Only existing bridge shown

SECTION D-D
1½" = 1'-0"

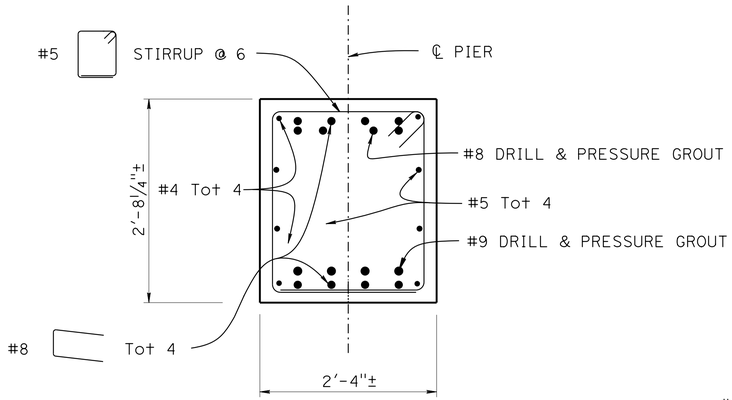

NOTE:
For details not shown,
see "SECTION D-D"

SECTION E-E
1" = 1'-0"

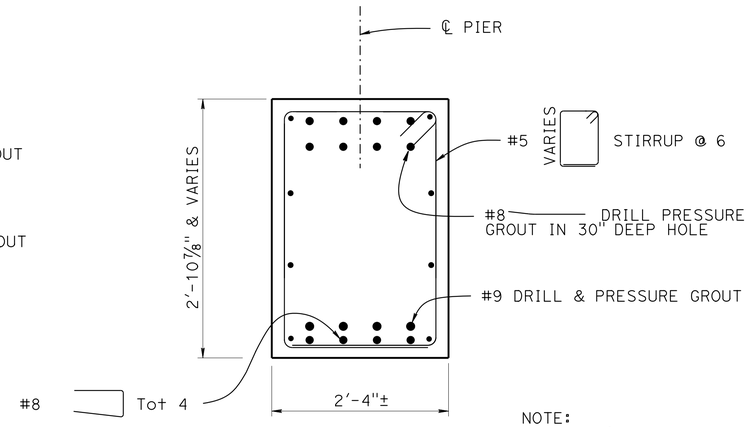

NOTE:
For details not shown,
see "SECTION E-E"

SECTION F-F
1" = 1'-0"

NOTE:
THE CONTRACTOR MUST VERIFY ALL CONTROLLING FIELD DIMENSIONS BEFORE ORDERING OR FABRICATING ANY MATERIAL.

	BY	CHECKED
DESIGN	Mufeed Khalaf	Arturo V Herrera
DETAILS	Nancy C Gwynn	Arturo V Herrera
QUANTITIES	Eric G Burgeson	Jose M Aquino III

STATE OF CALIFORNIA
DEPARTMENT OF TRANSPORTATION

DIVISION OF ENGINEERING SERVICES
STRUCTURE DESIGN
DESIGN BRANCH 3

BRIDGE NO. 02-0081
POST MILE 88.26

BEAVER CREEK BRIDGE (WIDEN)
PIER DETAILS No. 3

STRUCTURES DESIGN DETAIL SHEET (ENGLISH) (REV. 09-01-10)

ORIGINAL SCALE IN INCHES FOR REDUCED PLANS 0 1 2 3

UNIT: 3578
PROJECT NUMBER & PHASE: 02120000121
CONTRACT NO.: 02-4E6504

DISREGARD PRINTS BEARING EARLIER REVISION DATES

REVISION DATES 11-12-15 11-12-15 11-12-15

SHEET 17 OF 34

FILE => 02-0081-1-prdet03.dgn

USERNAME => s115152 DATE PLOTTED => 23-AUG-2016 TIME PLOTTED => 06:22

DIST	COUNTY	ROUTE	POST MILES TOTAL PROJECT	SHEET No.	TOTAL SHEETS
02	Sis	96	R52.5/88.4	192	208

Mufeed Khalaf 5-27-16
REGISTERED CIVIL ENGINEER DATE

06-15-16
PLANS APPROVAL DATE

REGISTERED PROFESSIONAL ENGINEER Mufeed Khalaf No. 54260 Exp. 12-31-17 CIVIL STATE OF CALIFORNIA

The State of California or its officers or agents shall not be responsible for the accuracy or completeness of scanned copies of this plan sheet.

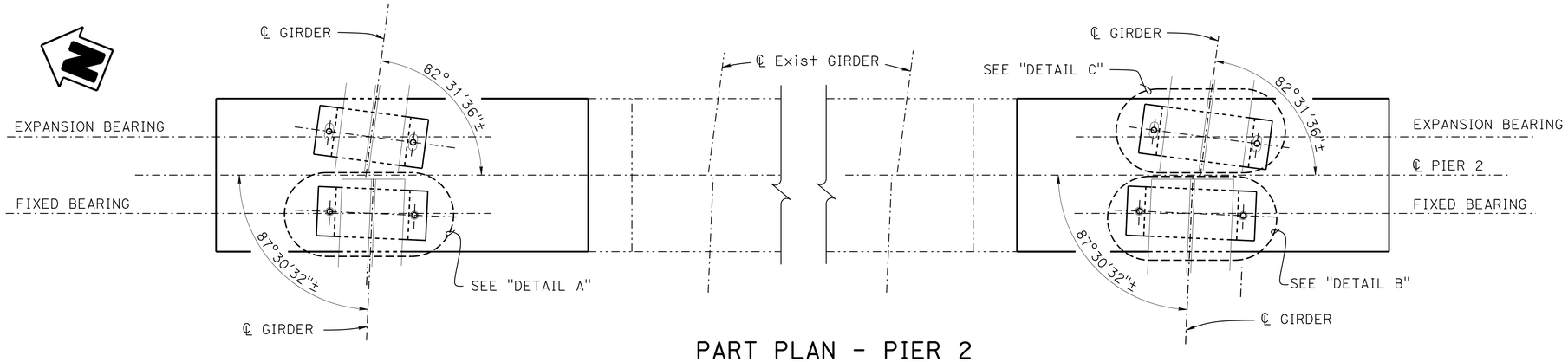

PART PLAN - PIER 2

1" = 1'-0"

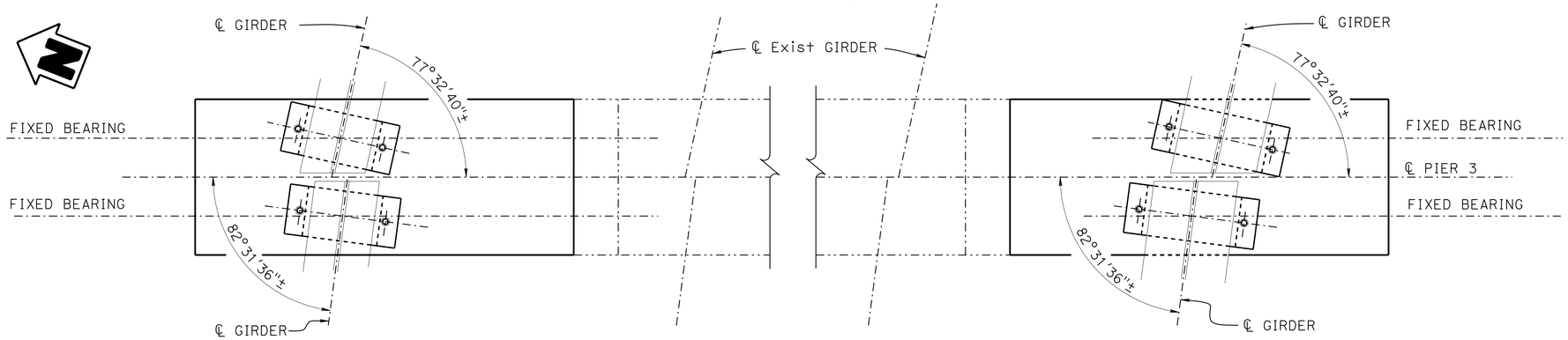

PART PLAN - PIER 3

1" = 1"-0"

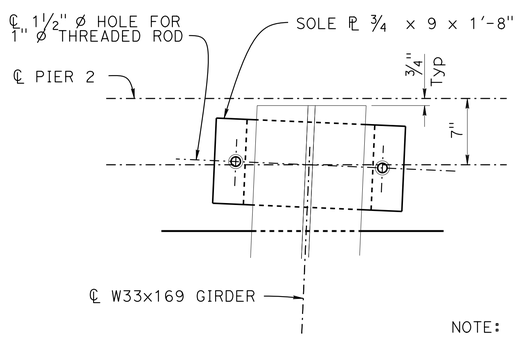

NOTE:
Bent 2 shown, Bent 3 similar

DETAIL A

1½" = 1'-0"

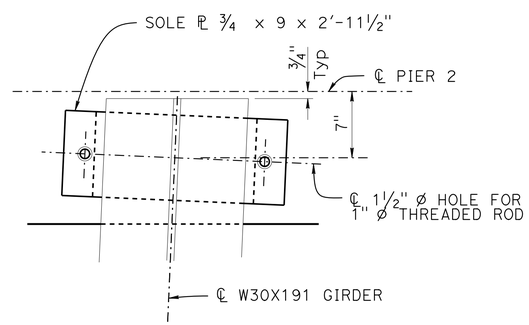

DETAIL B

1½" = 1'-0"

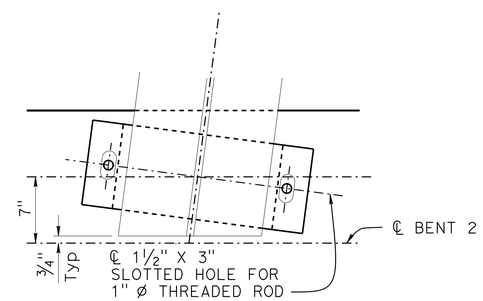

NOTE:
Detail typical at expansion locations

DETAIL C

1½" = 1'-0"

NOTE:
THE CONTRACTOR MUST VERIFY ALL CONTROLLING FIELD DIMENSIONS BEFORE ORDERING OR FABRICATING ANY MATERIAL.

	BY	CHECKED
DESIGN	Mufeed Khalaf	Arturo V Herrera
DETAILS	Nancy C Gwynn	Arturo V Herrera
QUANTITIES	Eric G Burgeson	Jose M Aquino III

STATE OF CALIFORNIA
DEPARTMENT OF TRANSPORTATION

DIVISION OF ENGINEERING SERVICES
STRUCTURE DESIGN
DESIGN BRANCH 3

BRIDGE NO. 02-0081
POST MILE 88.26

BEAVER CREEK BRIDGE (WIDEN)
PIER DETAILS NO. 4

STRUCTURES DESIGN DETAIL SHEET (ENGLISH) (REV. 09-01-10)

ORIGINAL SCALE IN INCHES FOR REDUCED PLANS 0 1 2 3

UNIT: 3578
PROJECT NUMBER & PHASE: 02120000121
CONTRACT NO.: 02-4E6504

DISREGARD PRINTS BEARING EARLIER REVISION DATES

REVISION DATES 12-1-14 2-26-15 10-16-15 12-7-15

SHEET 18 OF 34

FILE => 02-0081-1-prdet04.dgn

USERNAME => s115152 DATE PLOTTED => 23-AUG-2016 TIME PLOTTED => 06:22

DIST	COUNTY	ROUTE	POST MILES TOTAL PROJECT	SHEET No.	TOTAL SHEETS
02	Sis	96	R52.5/88.4	193	208

Mufeed Khalaf 5-27-16
REGISTERED CIVIL ENGINEER DATE

06-15-16
PLANS APPROVAL DATE

REGISTERED PROFESSIONAL ENGINEER Mufeed Khalaf No. 54260 Exp. 12-31-17 CIVIL STATE OF CALIFORNIA

The State of California or its officers or agents shall not be responsible for the accuracy or completeness of scanned copies of this plan sheet.

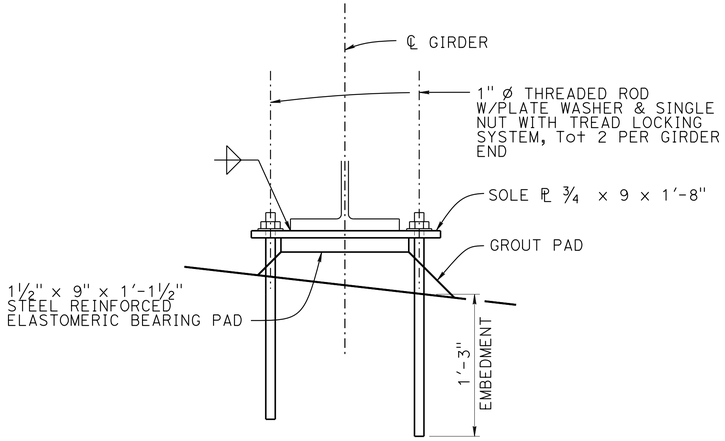

LEFT SIDE WIDENING
BEARING PAD DETAIL
1½" = 1'-0"

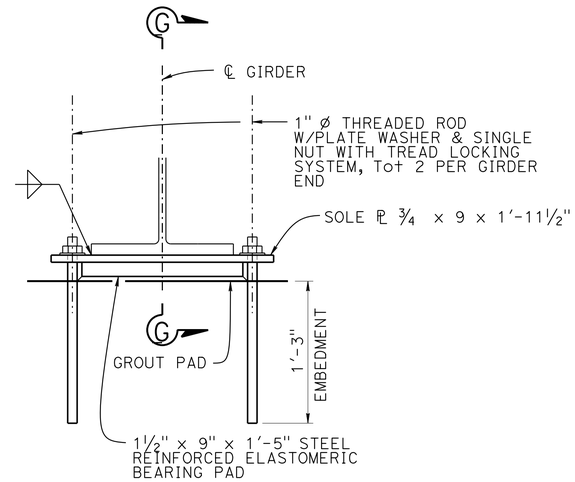

RIGHT SIDE WIDENING
BEARING PAD DETAIL
1½" = 1'-0"

NOTE:
For "SOLE PLATE" detail, see "ABUTMENT DETAILS No. 6" sheet

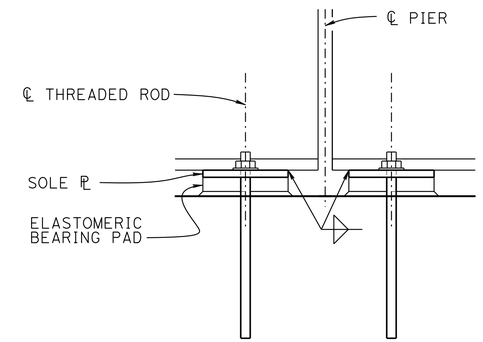

NOTE:
Right side widening shown, left side similar

SECTION G-G
1½" = 1'-0"

NOTE:
THE CONTRACTOR MUST VERIFY ALL CONTROLLING FIELD DIMENSIONS BEFORE ORDERING OR FABRICATING ANY MATERIAL.

	BY	CHECKED
DESIGN	Mufeed Khalaf	Arturo V Herrera
DETAILS	Nancy C Gwynn	Arturo V Herrera
QUANTITIES	Eric G Burgeson	Jose M Aquino III

STATE OF CALIFORNIA
DEPARTMENT OF TRANSPORTATION

DIVISION OF ENGINEERING SERVICES
STRUCTURE DESIGN
DESIGN BRANCH 3

BRIDGE NO. 02-0081
POST MILE 88.26

BEAVER CREEK BRIDGE (WIDEN)
PIER DETAILS NO. 5

STRUCTURES DESIGN DETAIL SHEET (ENGLISH) (REV. 09-01-10)

ORIGINAL SCALE IN INCHES FOR REDUCED PLANS 0 1 2 3

UNIT: 3578
PROJECT NUMBER & PHASE: 02120000121
CONTRACT NO.: 02-4E6504

DISREGARD PRINTS BEARING EARLIER REVISION DATES

REVISION DATES 11-18-15 12-1-15 1-29-16

SHEET 19 OF 34

FILE => 02-0081-1-prdet05.dgn

USERNAME => s115152 DATE PLOTTED => 23-AUG-2016 TIME PLOTTED => 06:22

DIST	COUNTY	ROUTE	POST MILES TOTAL PROJECT	SHEET No.	TOTAL SHEETS
02	Sis	96	R52.5/88.4	194	208

Mufeed Khalaf 5-27-16
REGISTERED CIVIL ENGINEER DATE

06-15-16
PLANS APPROVAL DATE

REGISTERED PROFESSIONAL ENGINEER Mufeed Khalaf No. 54260 Exp. 12-31-17 CIVIL STATE OF CALIFORNIA

The State of California or its officers or agents shall not be responsible for the accuracy or completeness of scanned copies of this plan sheet.

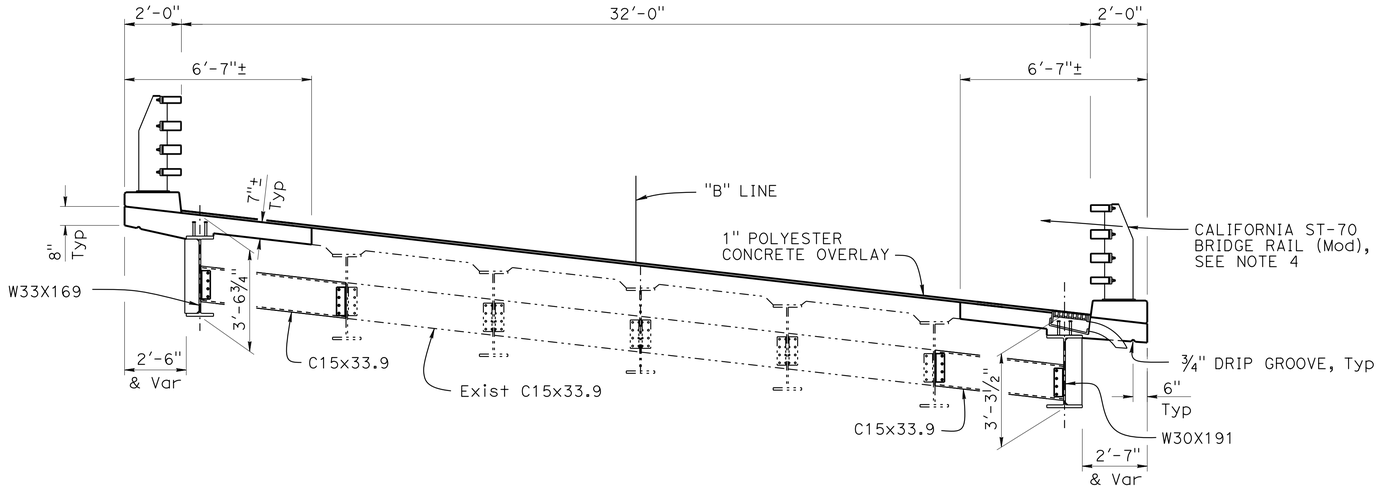

TYPICAL SECTION

⅜" = 1'-0"

NOTES:

1. All deck and barrier reinforcement will be epoxy coated
2. For "DETAIL A", "DETAIL B" and "DETAIL C", see "GIRDER DETAILS" sheet
3. For "DECK REPAIR DETAIL", see "JOINT SEAL DETAILS No. 2" sheet
4. For barrier details not shown, see "CALIFORNIA ST-70 BRIDGE RAIL" sheets. For Stain Galvanized Surfaces, see "ROADWAY PLANS"

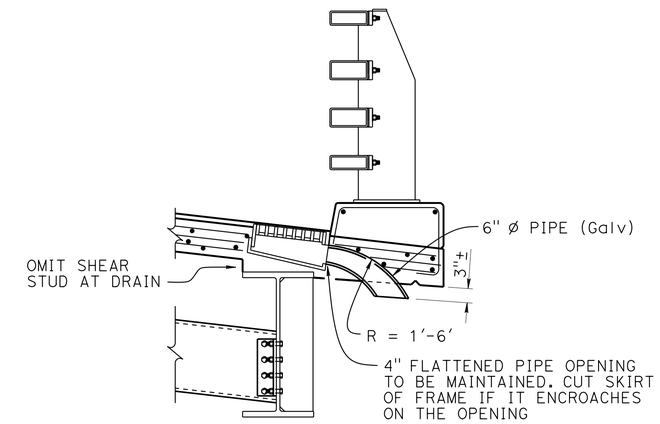

NOTES:

1. For Deck Drain Type D-2 (Mod) locations, see "GENERAL PLAN No. 1" sheet
2. For Deck Drain Type D-2 (Mod) details not shown, see B7-6 / 7-8

DECK DRAIN

¾" = 1'-0"

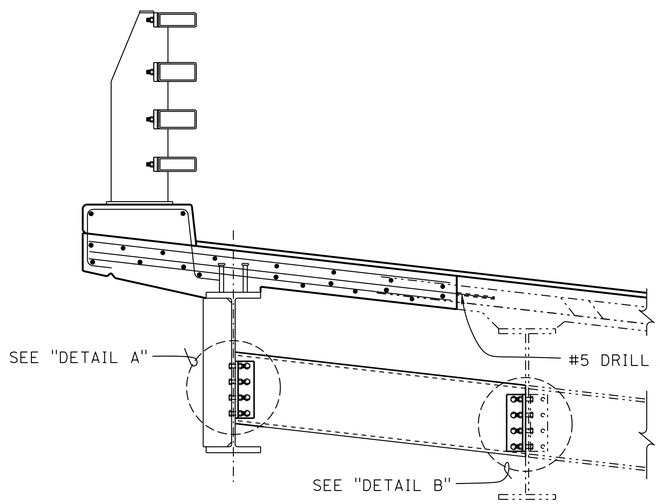

NOTE:
For reinf see right side widening

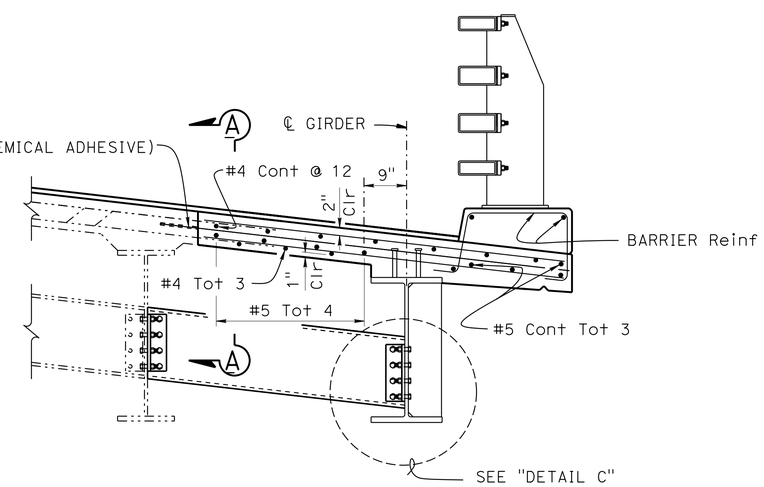

PART TYPICAL SECTION

¾" = 1'-0"

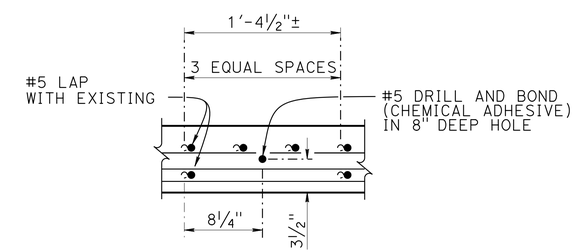

SECTION A-A

1½" = 1'-0"

NOTE:
THE CONTRACTOR MUST VERIFY ALL CONTROLLING FIELD DIMENSIONS BEFORE ORDERING OR FABRICATING ANY MATERIAL.

	BY	CHECKED
DESIGN	Mufeed Khalaf	Arturo V Herrera
DETAILS	Nancy C Gwynn	Arturo V Herrera
QUANTITIES	Eric G Burgeson	Jose M Aquino III

STATE OF CALIFORNIA
DEPARTMENT OF TRANSPORTATION

DIVISION OF ENGINEERING SERVICES
STRUCTURE DESIGN
DESIGN BRANCH 3

BRIDGE NO. 02-0081
POST MILE 88.26

BEAVER CREEK BRIDGE (WIDEN)
TYPICAL SECTION

STRUCTURES DESIGN DETAIL SHEET (ENGLISH) (REV. 09-01-10)

ORIGINAL SCALE IN INCHES FOR REDUCED PLANS 0 1 2 3

UNIT: 3578
PROJECT NUMBER & PHASE: 02120000121
CONTRACT NO.: 02-4E6504

DISREGARD PRINTS BEARING EARLIER REVISION DATES

REVISION DATES 11-12-14 12-18-15 2-14-16

SHEET 20 OF 34

FILE => 02-0081-k-typ.dgn

USERNAME => s115152 DATE PLOTTED => 23-AUG-2016 TIME PLOTTED => 06:22

DIST	COUNTY	ROUTE	POST MILES TOTAL PROJECT	SHEET No.	TOTAL SHEETS
02	Sis	96	R52.5/88.4	195	208

Mufeed Khalaf 5-27-16
REGISTERED CIVIL ENGINEER DATE

06-15-16
PLANS APPROVAL DATE

REGISTERED PROFESSIONAL ENGINEER
Mufeed Khalaf
No. 54260
Exp. 12-31-17
CIVIL
STATE OF CALIFORNIA

The State of California or its officers or agents shall not be responsible for the accuracy or completeness of scanned copies of this plan sheet.

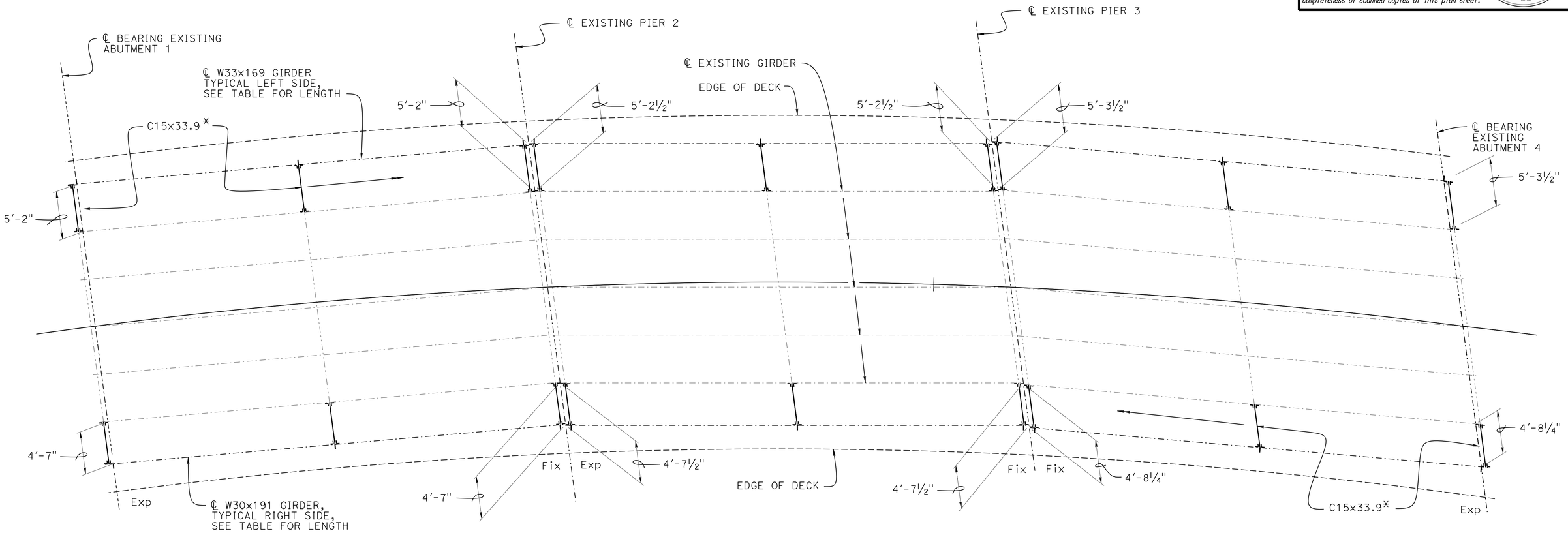

PLAN

3/16" = 1'-0"

LOCATION	GIRDER LENGTH
SPAN 1, RIGHT & LEFT WIDENING	49'-10"
SPAN 2, RIGHT & LEFT WIDENING	49'-10¼"
SPAN 3, RIGHT & LEFT WIDENING	49'-10"

NOTE:
Fix or Exp - Indicates fixed or expansion bearing

LEGEND:
* Align with existing channel

NOTE:
THE CONTRACTOR MUST VERIFY ALL CONTROLLING FIELD DIMENSIONS BEFORE ORDERING OR FABRICATING ANY MATERIAL.

	BY	CHECKED
DESIGN	Mufeed Khalaf	Arturo V Herrera
DETAILS	Nancy C Gwynn	Arturo V Herrera
QUANTITIES	Eric G Burgeson	Jose M Aquino III

STATE OF CALIFORNIA
DEPARTMENT OF TRANSPORTATION

DIVISION OF ENGINEERING SERVICES
STRUCTURE DESIGN
DESIGN BRANCH 3

BRIDGE NO. 02-0081
POST MILE 88.26

BEAVER CREEK BRIDGE (WIDEN)
GIRDER LAYOUT

STRUCTURES DESIGN DETAIL SHEET (ENGLISH) (REV. 09-01-10)

ORIGINAL SCALE IN INCHES FOR REDUCED PLANS 0 1 2 3

UNIT: 3578
PROJECT NUMBER & PHASE: 02120000121
CONTRACT NO.: 02-4E6504

DISREGARD PRINTS BEARING EARLIER REVISION DATES

REVISION DATES: 2-8-16 10-16-15 10-27-15 1-5-16

SHEET 21 OF 34

FILE => 02-0081-1-gio.dgn

USERNAME => s115152 DATE PLOTTED => 23-AUG-2016 TIME PLOTTED => 06:22

DIST	COUNTY	ROUTE	POST MILES TOTAL PROJECT	SHEET No.	TOTAL SHEETS
02	Sis	96	R52.5/88.4	196	208

Mufeed Khalaf 5-27-16
REGISTERED CIVIL ENGINEER DATE

06-15-16
PLANS APPROVAL DATE

REGISTERED PROFESSIONAL ENGINEER Mufeed Khalaf No. 54260 Exp. 12-31-17 CIVIL STATE OF CALIFORNIA

The State of California or its officers or agents shall not be responsible for the accuracy or completeness of scanned copies of this plan sheet.

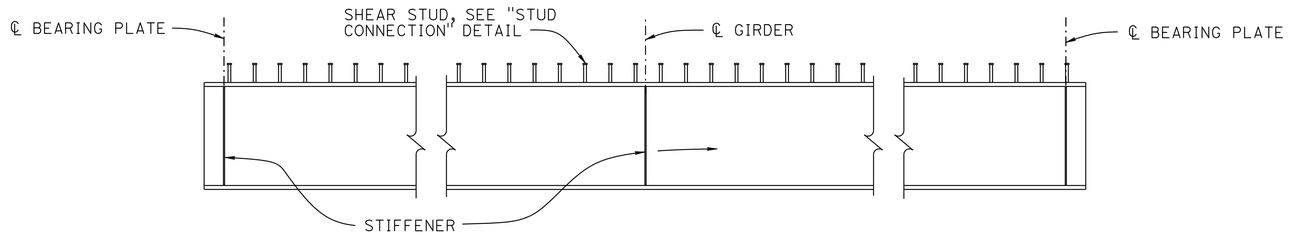

GIRDER ELEVATION
½" = 1'-0"

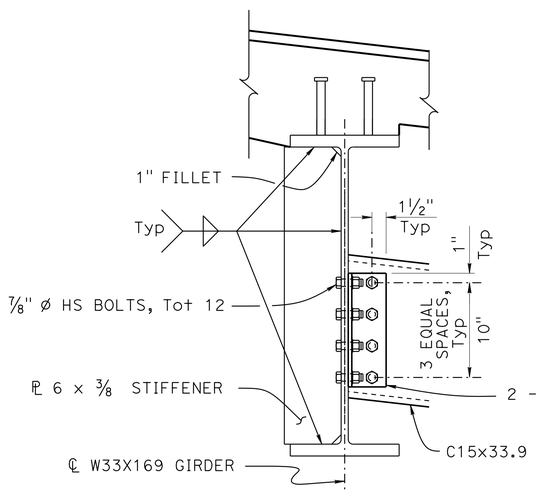

DETAIL A
1½" = 1'-0"

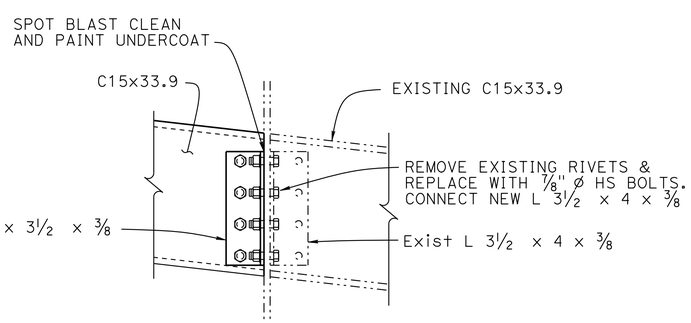

DETAIL B
1½" = 1'-0"

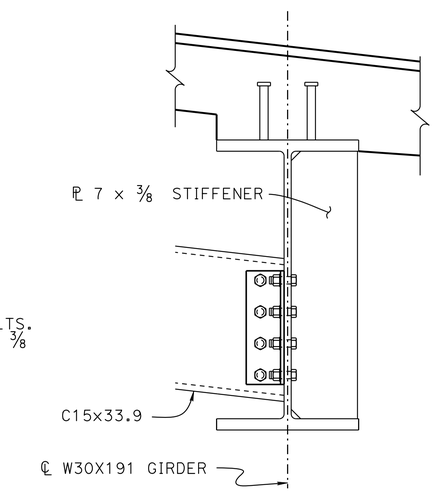

NOTE:
For details not shown, see "DETAIL A"

DETAIL C
1½" = 1'-0"

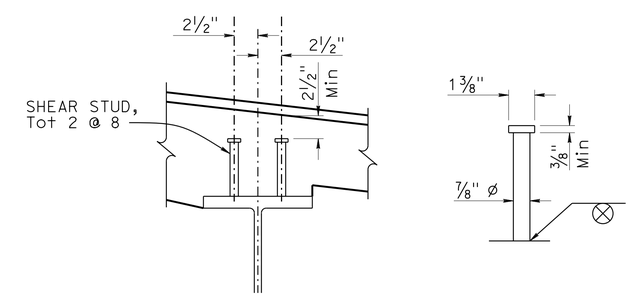

NOTE:
Minimum stud length is 6"

SHEAR STUD CONNECTION
1½" = 1'-0"

NOTE:
THE CONTRACTOR MUST VERIFY ALL CONTROLLING FIELD DIMENSIONS BEFORE ORDERING OR FABRICATING ANY MATERIAL.

	BY	CHECKED
DESIGN	Mufeed Khalaf	Arturo V Herrera
DETAILS	Nancy C Gwynn	Arturo V Herrera
QUANTITIES	Eric G Burgeson	Jose M Aquino III

STATE OF CALIFORNIA
DEPARTMENT OF TRANSPORTATION

DIVISION OF ENGINEERING SERVICES
STRUCTURE DESIGN
DESIGN BRANCH 3

BRIDGE NO. 02-0081
POST MILE 88.26

BEAVER CREEK BRIDGE (WIDEN)
GIRDER DETAILS

STRUCTURES DESIGN DETAIL SHEET (ENGLISH) (REV. 09-01-10)

ORIGINAL SCALE IN INCHES FOR REDUCED PLANS 0 1 2 3

UNIT: 3578
PROJECT NUMBER & PHASE: 02120000121
CONTRACT NO.: 02-4E6504

DISREGARD PRINTS BEARING EARLIER REVISION DATES

REVISION DATES 2-22-16 3-21-16 02-02-16

SHEET 22 OF 34

FILE => 02-0081-m-gdet.dgn

USERNAME => s115152 DATE PLOTTED => 23-AUG-2016 TIME PLOTTED => 06:22

DIST	COUNTY	ROUTE	POST MILES TOTAL PROJECT	SHEET No.	TOTAL SHEETS
02	Sis	96	R52.5/88.4	197	208

Mufeed Khalaf 5-27-16
REGISTERED CIVIL ENGINEER DATE

06-15-16
PLANS APPROVAL DATE

REGISTERED PROFESSIONAL ENGINEER
Mufeed Khalaf
No. 54260
Exp. 12-31-17
CIVIL
STATE OF CALIFORNIA

The State of California or its officers or agents shall not be responsible for the accuracy or completeness of scanned copies of this plan sheet.

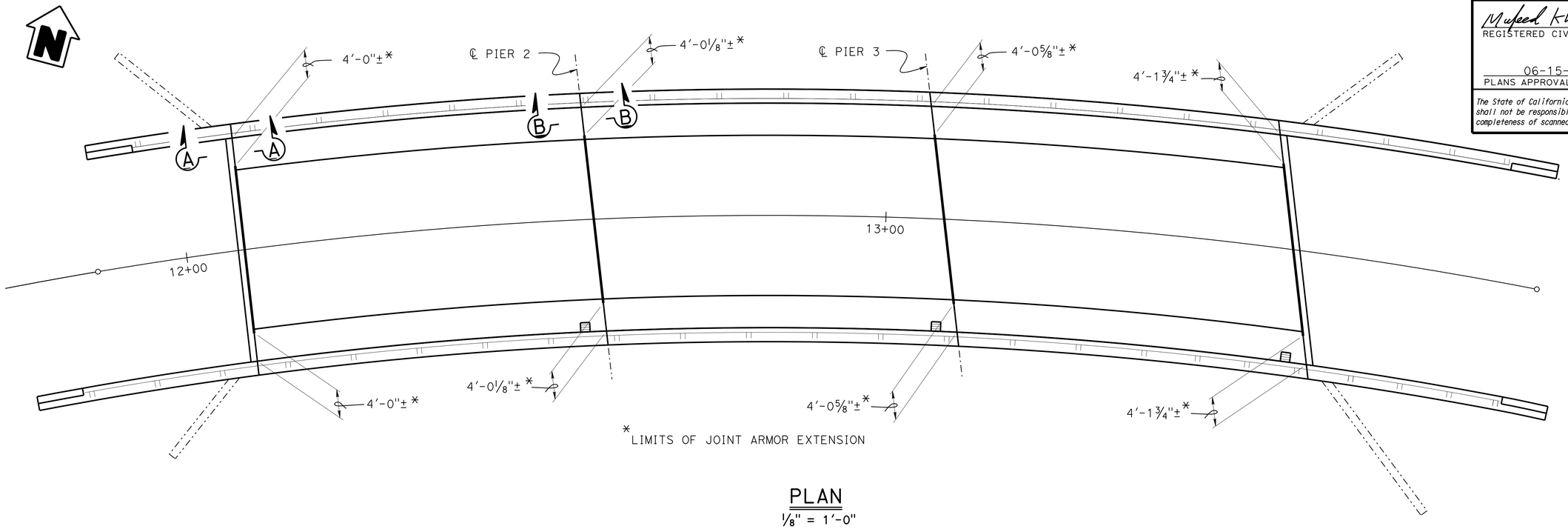

* LIMITS OF JOINT ARMOR EXTENSION

PLAN
⅛" = 1'-0"

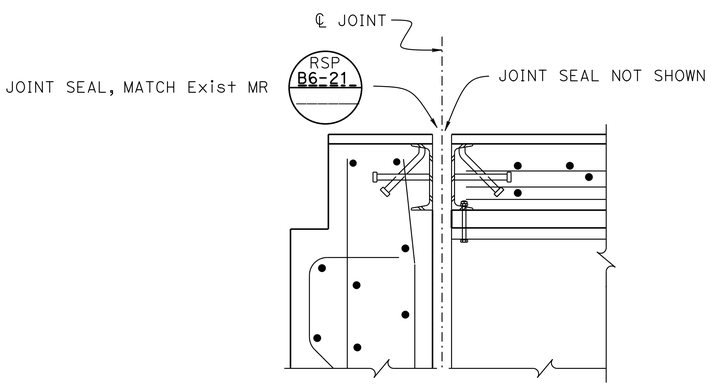

NOTES:
1. For details not shown, see "SECTION B-B"
2. Detail typical at Abutment locations

SECTION A-A
1½" = 1'-0"

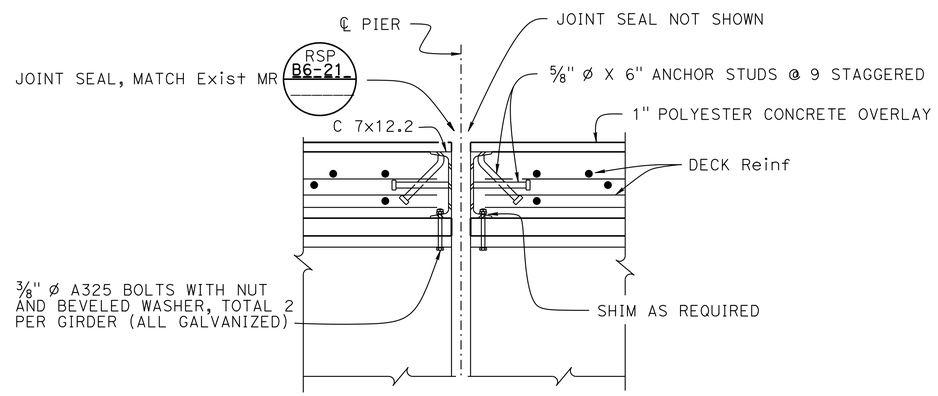

NOTE:
Detail typical at Pier locations

SECTION B-B
1½" = 1'-0"

NOTE:
THE CONTRACTOR MUST VERIFY ALL CONTROLLING FIELD DIMENSIONS BEFORE ORDERING OR FABRICATING ANY MATERIAL.

NOTE:
For details not shown, see "JOINT SEAL DETAILS No. 2" sheet

	BY	CHECKED
DESIGN	Mufeed Khalaf	Arturo V Herrera
DETAILS	Nancy C Gwynn	Arturo V Herrera
QUANTITIES	Eric G Burgeson	Jose M Aquino III

STATE OF CALIFORNIA
DEPARTMENT OF TRANSPORTATION

DIVISION OF ENGINEERING SERVICES
STRUCTURE DESIGN
DESIGN BRANCH 3

BRIDGE NO. 02-0081
POST MILE 88.26

BEAVER CREEK BRIDGE (WIDEN)
JOINT SEAL DETAILS No. 1

STRUCTURES DESIGN DETAIL SHEET (ENGLISH) (REV. 09-01-10)

ORIGINAL SCALE IN INCHES FOR REDUCED PLANS 0 1 2 3

UNIT: 3578
PROJECT NUMBER & PHASE: 02120000121
CONTRACT NO.: 02-4E6504

DISREGARD PRINTS BEARING EARLIER REVISION DATES

REVISION DATES: 8-9-2016 10-6-2016 12-16-2016 2-09-16

SHEET 23 OF 34

FILE => 02-0081-n-jtdet01.dgn

USERNAME => s115152 DATE PLOTTED => 23-AUG-2016 TIME PLOTTED => 06:22

DIST	COUNTY	ROUTE	POST MILES TOTAL PROJECT	SHEET No.	TOTAL SHEETS
02	Sis	96	R52.5/88.4	198	208

Mufeed Khalaf 5-27-16
REGISTERED CIVIL ENGINEER DATE

06-15-16
PLANS APPROVAL DATE

REGISTERED PROFESSIONAL ENGINEER Mufeed Khalaf No. 54260 Exp. 12-31-17 CIVIL STATE OF CALIFORNIA

The State of California or its officers or agents shall not be responsible for the accuracy or completeness of scanned copies of this plan sheet.

JOINT SEAL TABLE

LOCATION	MR	REPLACE	Approx LENGTH OF CLEANING	Exist WATERSTOP	Approx DEPTH CLEAN Exp JOINT	TYPE	Approx LENGTH OF NEW TYPE B SEAL
Abut 1	1½"	YES	25'-0"±	NO	10"	B	32'-4"±
PIER 2	1½"	YES	25'-0"±	NO	7"	B	32'-4"±
PIER 3	1"	YES	25'-0"±	NO	7"	B	33'-0"±
Abut 4	1½"	YES	25'-0"±	NO	10"	B	32'-4"±

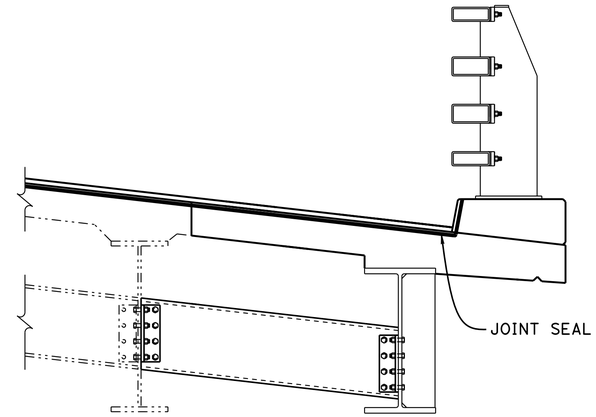

JOINT SEAL AT LOW SIDE OF DECK

½" = 1'-0"

NOTES:
1. Terminate joint armor at face of curb
2. Full penetration welds may be substituted for arc stud welds on all anchor studs
3. Alternate types of anchor studs may be permitted
4. For details not shown, see RSP B6-21

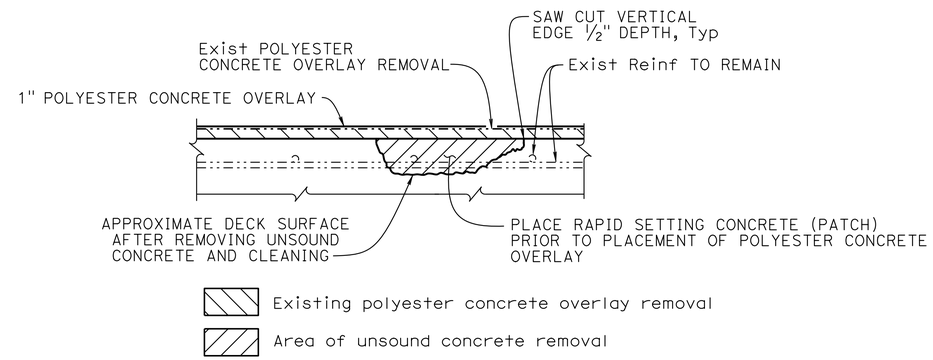

DECK REPAIR DETAIL

No Scale

LOCATIONS TO BE DETERMINED BY THE ENGINEER. REINFORCEMENT MAY BE ENCOUNTERED DURING DECK CONCRETE REMOVAL AND IS TO REMAIN UNDAMAGED

BRIDGE DECK REPAIR TABLE

APPROXIMATE AREA DAMAGED (%)	APPROXIMATE DEPTH (in)	REMOVE UNSOUND CONCRETE ft^3	RAPID SETTING CONCRETE (PATCH) ft^3
5	3	53	53

NOTE:
THE CONTRACTOR MUST VERIFY ALL CONTROLLING FIELD DIMENSIONS BEFORE ORDERING OR FABRICATING ANY MATERIAL.

	BY	CHECKED
DESIGN	Mufeed Khalaf	Arturo V Herrera
DETAILS	Nancy C Gwynn	Arturo V Herrera
QUANTITIES	Eric G Burgeson	Jose M Aquino III

STATE OF CALIFORNIA
DEPARTMENT OF TRANSPORTATION

DIVISION OF ENGINEERING SERVICES
STRUCTURE DESIGN
DESIGN BRANCH 3

BRIDGE NO. 02-0081
POST MILE 88.26

BEAVER CREEK BRIDGE (WIDEN)
JOINT SEAL DETAILS No. 2

STRUCTURES DESIGN DETAIL SHEET (ENGLISH) (REV. 09-01-10)

ORIGINAL SCALE IN INCHES FOR REDUCED PLANS 0 1 2 3

UNIT: 3578
PROJECT NUMBER & PHASE: 02120000121
CONTRACT NO.: 02-4E6504

DISREGARD PRINTS BEARING EARLIER REVISION DATES

REVISION DATES 2-11-16 1-13-16 12-21-16

SHEET 24 OF 34

FILE => 02-0081-n-jtdet02.dgn

USERNAME => s115152 DATE PLOTTED => 23-AUG-2016 TIME PLOTTED => 06:22

DIST	COUNTY	ROUTE	POST MILES TOTAL PROJECT	SHEET No.	TOTAL SHEETS
02	Sis	96	R52.5/88.4	199	208

Mufeed Khalaf 5-27-16
REGISTERED CIVIL ENGINEER DATE

06-15-16
PLANS APPROVAL DATE

REGISTERED PROFESSIONAL ENGINEER Mufeed Khalaf No. 54260 Exp. 12-31-17 CIVIL STATE OF CALIFORNIA

The State of California or its officers or agents shall not be responsible for the accuracy or completeness of scanned copies of this plan sheet.

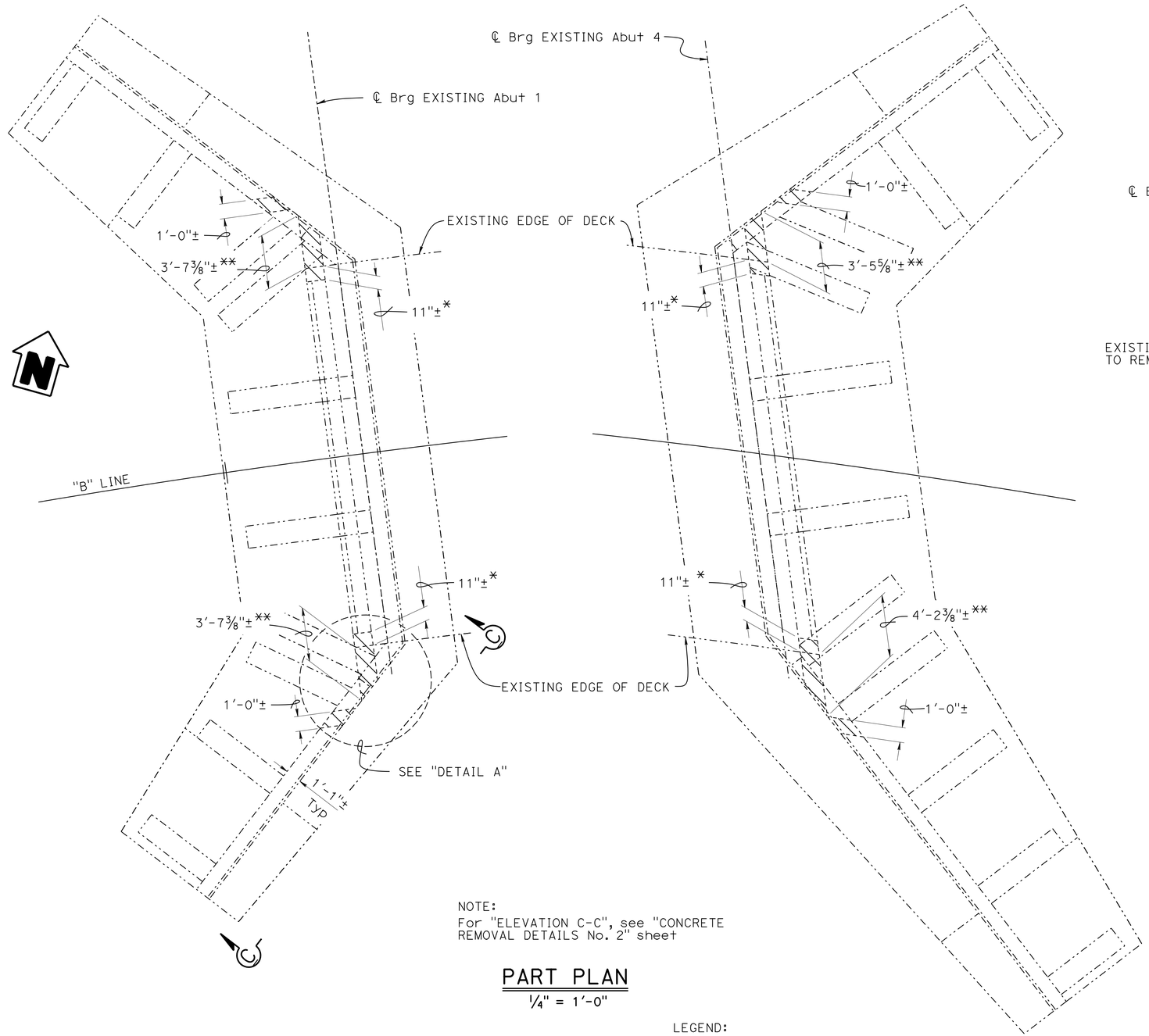

NOTE:
For "ELEVATION C-C", see "CONCRETE REMOVAL DETAILS No. 2" sheet

PART PLAN
¼" = 1'-0"

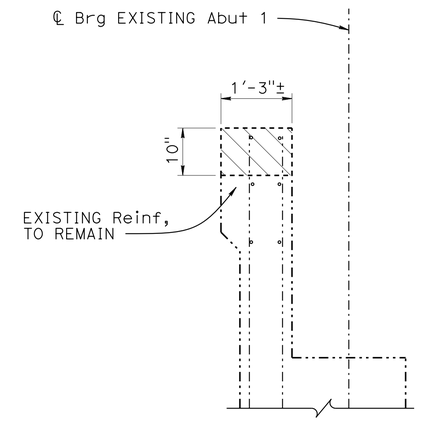

SECTION A-A
½" = 1'-0"

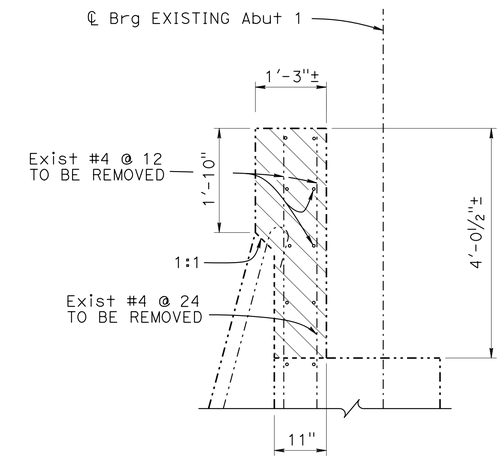

SECTION B-B
½" = 1'-0"

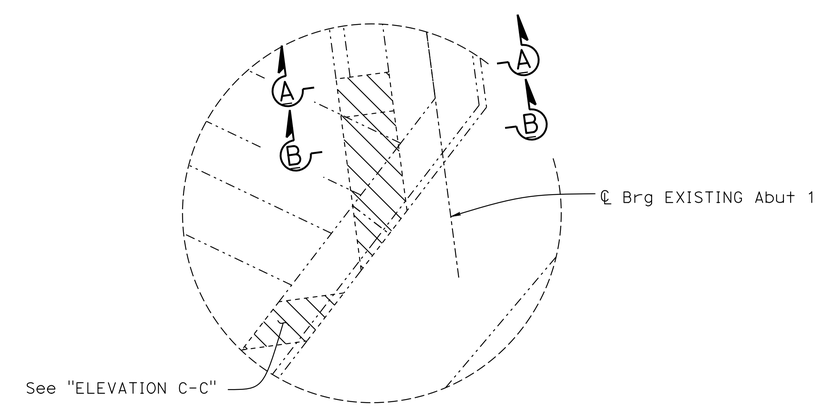

DETAIL A
NO SCALE

LEGEND:
* Limits of "SECTION A-A"
** Limits of "SECTION B-B"
-·-·-·- Indicates existing bridge
▨ Indicates existing bridge removal (portion), Location C

NOTE:
THE CONTRACTOR MUST VERIFY ALL CONTROLLING FIELD DIMENSIONS BEFORE ORDERING OR FABRICATING ANY MATERIAL.

	BY	CHECKED
DESIGN	Mufeed Khalaf	Arturo V Herrera
DETAILS	Nancy C Gwynn	Arturo V Herrera
QUANTITIES	Eric G Burgeson	Jose M Aquino III

STATE OF CALIFORNIA
DEPARTMENT OF TRANSPORTATION

DIVISION OF ENGINEERING SERVICES
STRUCTURE DESIGN
DESIGN BRANCH 3

BRIDGE NO. 02-0081
POST MILE 88.26

BEAVER CREEK BRIDGE (WIDEN)
BRIDGE REMOVAL (PORTION) Det NO. 1

STRUCTURES DESIGN DETAIL SHEET (ENGLISH) (REV. 09-01-10)

ORIGINAL SCALE IN INCHES FOR REDUCED PLANS 0 1 2 3

UNIT: 3578
PROJECT NUMBER & PHASE: 02120000121
CONTRACT NO.: 02-4E6504

DISREGARD PRINTS BEARING EARLIER REVISION DATES

REVISION DATES: 2-24-16 3-3-16 12-29-16 1-13-16

SHEET 25 OF 34

FILE => 02-0081-s-crem01.dgn

USERNAME => s115152 DATE PLOTTED => 23-AUG-2016 TIME PLOTTED => 08:22

DIST	COUNTY	ROUTE	POST MILES TOTAL PROJECT	SHEET No.	TOTAL SHEETS
02	Sis	96	R52.5/88.4	200	208

Mufeed Khalaf 5-27-16
REGISTERED CIVIL ENGINEER DATE

06-15-16
PLANS APPROVAL DATE

REGISTERED PROFESSIONAL ENGINEER
Mufeed Khalaf
No. 54260
Exp. 12-31-17
CIVIL
STATE OF CALIFORNIA

The State of California or its officers or agents shall not be responsible for the accuracy or completeness of scanned copies of this plan sheet.

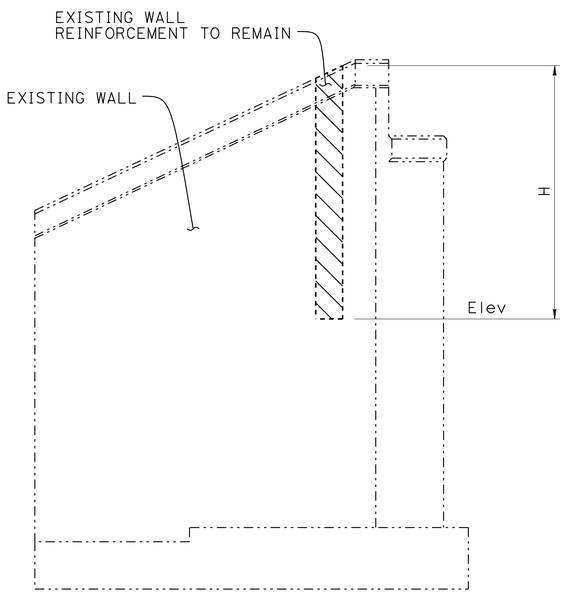

LOCATION	H	Elev
Abutment 1 left wall	11'-8"±	1763.80
Abutment 1 right wall	12'-6"±	1759.40
Abutment 4 left wall	16'-11"±	1758.00
Abutment 4 right wall	12'-2"±	1759.00

ELEVATION C-C

1/4" = 1'-0"

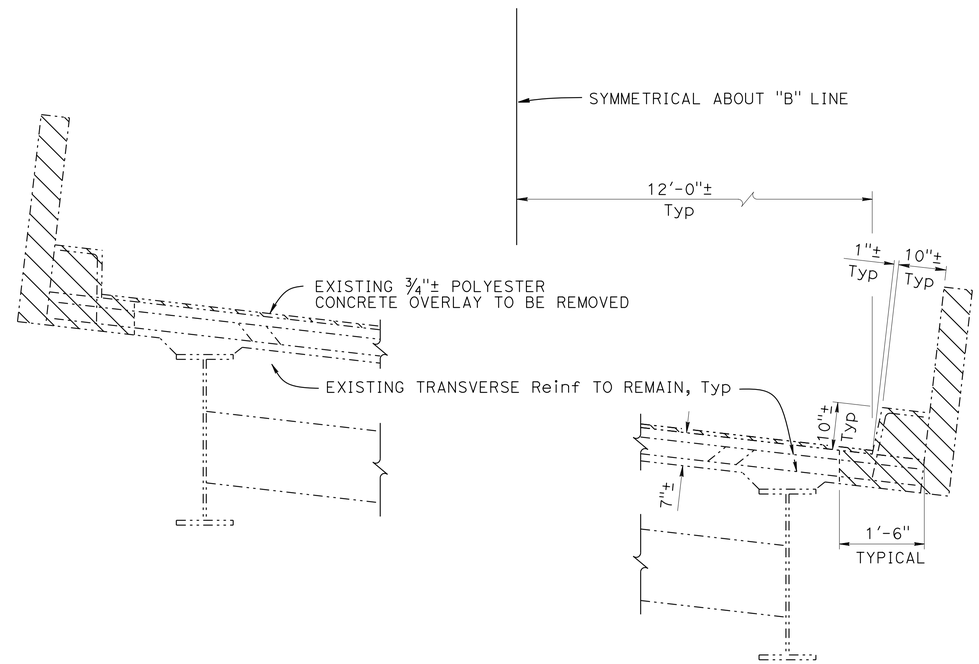

PART TYPICAL SECTION

3/4" = 1'-0"

NOTE:
THE CONTRACTOR MUST VERIFY ALL CONTROLLING FIELD DIMENSIONS BEFORE ORDERING OR FABRICATING ANY MATERIAL.

LEGEND:

-·-·-·- Indicates existing bridge

Indicates existing bridge removal (portion), Location C

	BY	CHECKED
DESIGN	Mufeed Khalaf	Arturo V Herrera
DETAILS	Nancy C Gwynn	Arturo V Herrera
QUANTITIES	Eric G Burgeson	Jose M Aquino III

STATE OF CALIFORNIA
DEPARTMENT OF TRANSPORTATION

DIVISION OF ENGINEERING SERVICES
STRUCTURE DESIGN
DESIGN BRANCH 3

BRIDGE NO. 02-0081
POST MILE 88.26

BEAVER CREEK BRIDGE (WIDEN)
BRIDGE REMOVAL (PORTION) Det NO. 2

STRUCTURES DESIGN DETAIL SHEET (ENGLISH) (REV. 09-01-10)

ORIGINAL SCALE IN INCHES FOR REDUCED PLANS 0 1 2 3

UNIT: 3578
PROJECT NUMBER & PHASE: 02120000121
CONTRACT NO.: 02-4E6504

DISREGARD PRINTS BEARING EARLIER REVISION DATES

REVISION DATES: 10-12-15 ..... 1-13-16 12-15-15

SHEET 26 OF 34

FILE => 02-0081-s-crem02.dgn

USERNAME => s115152 DATE PLOTTED => 23-AUG-2016 TIME PLOTTED => 06:22

DIST	COUNTY	ROUTE	POST MILES TOTAL PROJECT	SHEET No.	TOTAL SHEETS
02	Sis	96	R52.5/88.4	201	208

Mufeed Khalaf 5-27-16
REGISTERED CIVIL ENGINEER DATE

06-15-16
PLANS APPROVAL DATE

REGISTERED PROFESSIONAL ENGINEER
Mufeed Khalaf
No. 54260
Exp. 12-31-17
CIVIL
STATE OF CALIFORNIA

The State of California or its officers or agents shall not be responsible for the accuracy or completeness of scanned copies of this plan sheet.

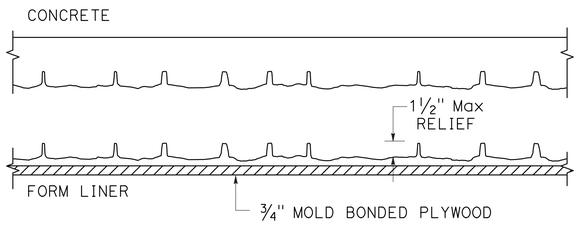

EXTERIOR SECTION A-A
NO SCALE

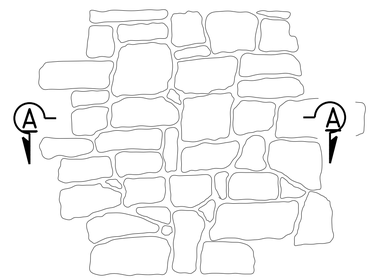

PATTERN ELEVATION
NO SCALE

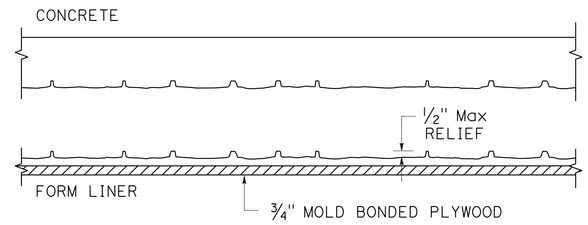

INTERIOR SECTION A-A
NO SCALE

RANDOM ROUGH STACKED ROCK TEXTURE DETAILS
NO SCALE

TEXTURE NOTES:

1. The contractor must verify all controlling dimensions and field conditions prior to ordering or fabricating any materials or assemblies for construction
2. RANDOM ROUGH STACKED ROCK TEXTURE:
   Texture relief to be ½" maximum at interior pattern
   Stone sizes shall be random
   2½" to 18" in width
   2" to 12" in height
3. RANDOM ROUGH STACKED ROCK TEXTURE:
   Texture relief to be 1½" maximum at exterior pattern
   Stone sizes shall be random
   2½" to 18" in width
   2" to 12" in height

NOTES:

1. Barrier concrete surface textures to have stain applied after construction
2. For "DETAIL A", see "CONCRETE SURFACE TEXTURE Det No. 2" sheet
3. For rail details not shown, see "CALIFORNIA ST-70 BRIDGE RAIL", "DETAILS No. 1" thru "DETAILS No. 4" sheets

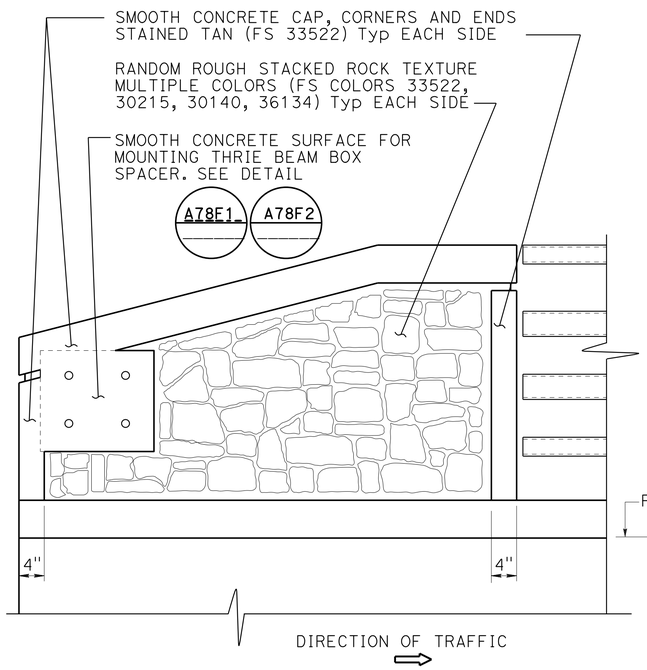

NOTE:
Tapered end block at both ends of barrier

EXTERIOR ELEVATION
1" = 1'-0"

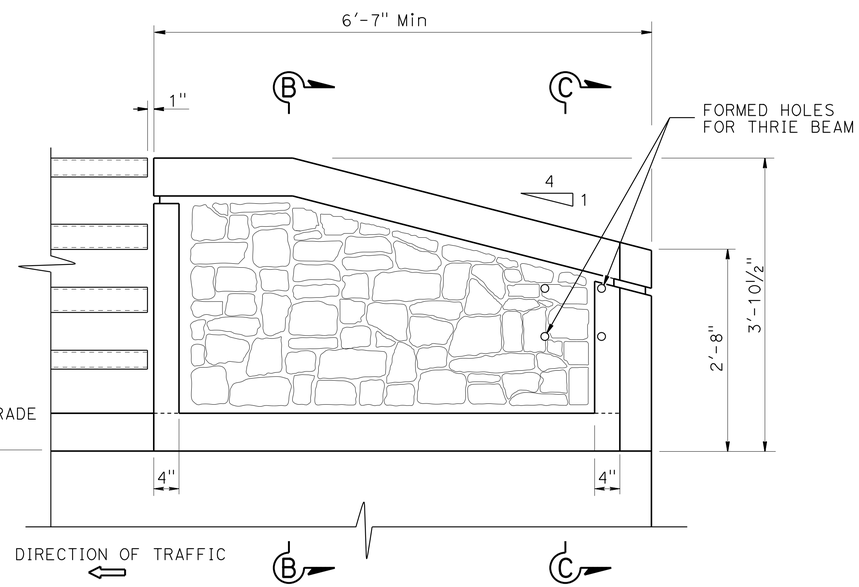

INTERIOR ELEVATION
1" = 1'-0"

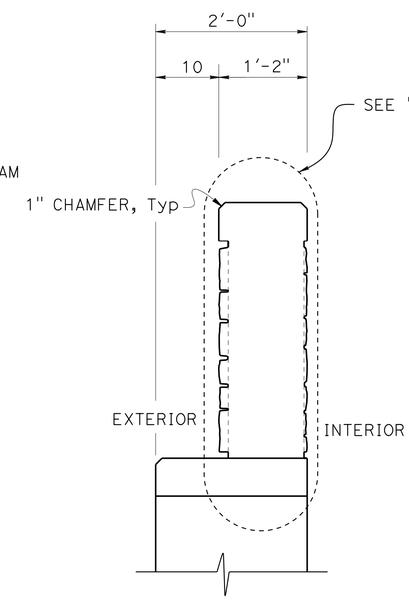

SECTION B-B
1" = 1'-0"

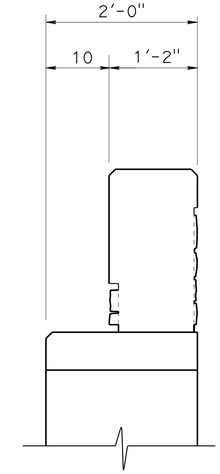

SECTION C-C
1" = 1'-0"

DESIGN	BY Stephan D Heath	CHECKED Quincy Wong	
DETAILS	BY Nancy C Gwynn	CHECKED Quincy Wong	
QUANTITIES	BY Eric E Burgeson	CHECKED Jose M Aquino III	

STATE OF CALIFORNIA
DEPARTMENT OF TRANSPORTATION

DIVISION OF ENGINEERING SERVICES
STRUCTURE DESIGN
DESIGN BRANCH 3

BRIDGE NO. 02-0081
POST MILE 88.3

BEAVER CREEK BRIDGE (WIDEN)
CONCRETE SURFACE TEXTURE Det No. 1

STRUCTURES DESIGN DETAIL SHEET (ENGLISH) (REV. 09-01-10)

ORIGINAL SCALE IN INCHES FOR REDUCED PLANS 0 1 2 3

UNIT: 3578
PROJECT NUMBER & PHASE: 02120000121
CONTRACT NO.: 02-4E6504

DISREGARD PRINTS BEARING EARLIER REVISION DATES

REVISION DATES 10-25-16 12-2-16

SHEET 27 OF 34

FILE => 02-0081-u-barsur01.dgn

USERNAME => s115152 DATE PLOTTED => 23-AUG-2016 TIME PLOTTED => 06:22

DIST	COUNTY	ROUTE	POST MILES TOTAL PROJECT	SHEET No.	TOTAL SHEETS
02	Sis	96	R52.5/88.4	202	208

Mufeed Khalaf 5-27-16
REGISTERED CIVIL ENGINEER DATE

06-15-16
PLANS APPROVAL DATE

REGISTERED PROFESSIONAL ENGINEER
Mufeed Khalaf
No. 54260
Exp. 12-31-17
CIVIL
STATE OF CALIFORNIA

The State of California or its officers or agents shall not be responsible for the accuracy or completeness of scanned copies of this plan sheet.

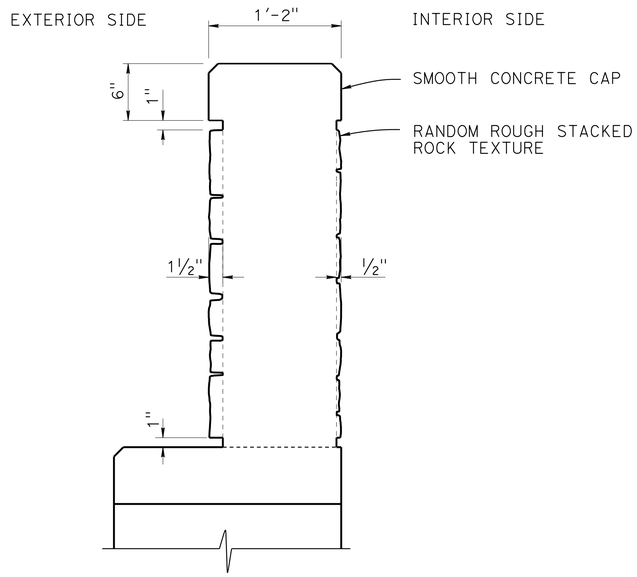

DETAIL A
1½" = 1'-0"

LEGEND:

25% CONCRETE STAIN
FEDERAL STANDARD 595C #30140
(DARK BROWN)

25% CONCRETE STAIN
FEDERAL STANDARD 595C #30215
(RED BROWN)

25% CONCRETE STAIN
FEDERAL STANDARD 595C #33522
(MEDIUM TAN)

25% CONCRETE STAIN
FEDERAL STANDARD 595C #36134
(MEDIUM DARK GRAY)

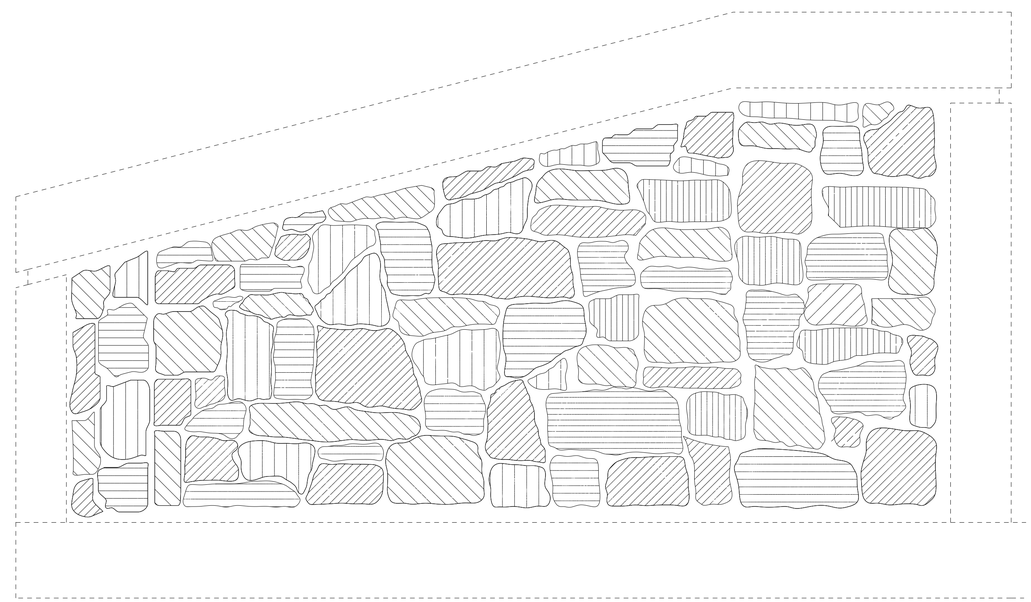

BARRIER ELEVATION

DESIGN	BY Stephan D Heath	CHECKED Quincy Wong
DETAILS	BY Nancy C Gwynn	CHECKED Quincy Wong
QUANTITIES	BY Eric E Burgeson	CHECKED Jose M Aquino III

STATE OF CALIFORNIA
DEPARTMENT OF TRANSPORTATION

DIVISION OF ENGINEERING SERVICES
STRUCTURE DESIGN
DESIGN BRANCH 3

BRIDGE NO. 02-0081
POST MILE 88.3

BEAVER CREEK BRIDGE (WIDEN)
CONCRETE SURFACE TEXTURE Det No. 2

STRUCTURES DESIGN DETAIL SHEET (ENGLISH) (REV. 09-01-10)

ORIGINAL SCALE IN INCHES FOR REDUCED PLANS 0 1 2 3

UNIT: 3578
PROJECT NUMBER & PHASE: 02120000121
CONTRACT NO.: 02-4E6504

DISREGARD PRINTS BEARING EARLIER REVISION DATES

REVISION DATES 10-2-15 12-2-15

SHEET 28 OF 34

FILE => 02-0081-u-barsur02.dgn

USERNAME => s115152 DATE PLOTTED => 23-AUG-2016 TIME PLOTTED => 06:22

DIST	COUNTY	ROUTE	POST MILES TOTAL PROJECT	SHEET No.	TOTAL SHEETS
02	Sis	96	R52.5/88.4	203	208

Mufeed Khalaf 5-27-16
REGISTERED CIVIL ENGINEER DATE

06-15-16
PLANS APPROVAL DATE

REGISTERED PROFESSIONAL ENGINEER Mufeed Khalaf No. 54260 Exp. 12-31-17 CIVIL STATE OF CALIFORNIA

The State of California or its officers or agents shall not be responsible for the accuracy or completeness of electronic copies of this plan sheet.

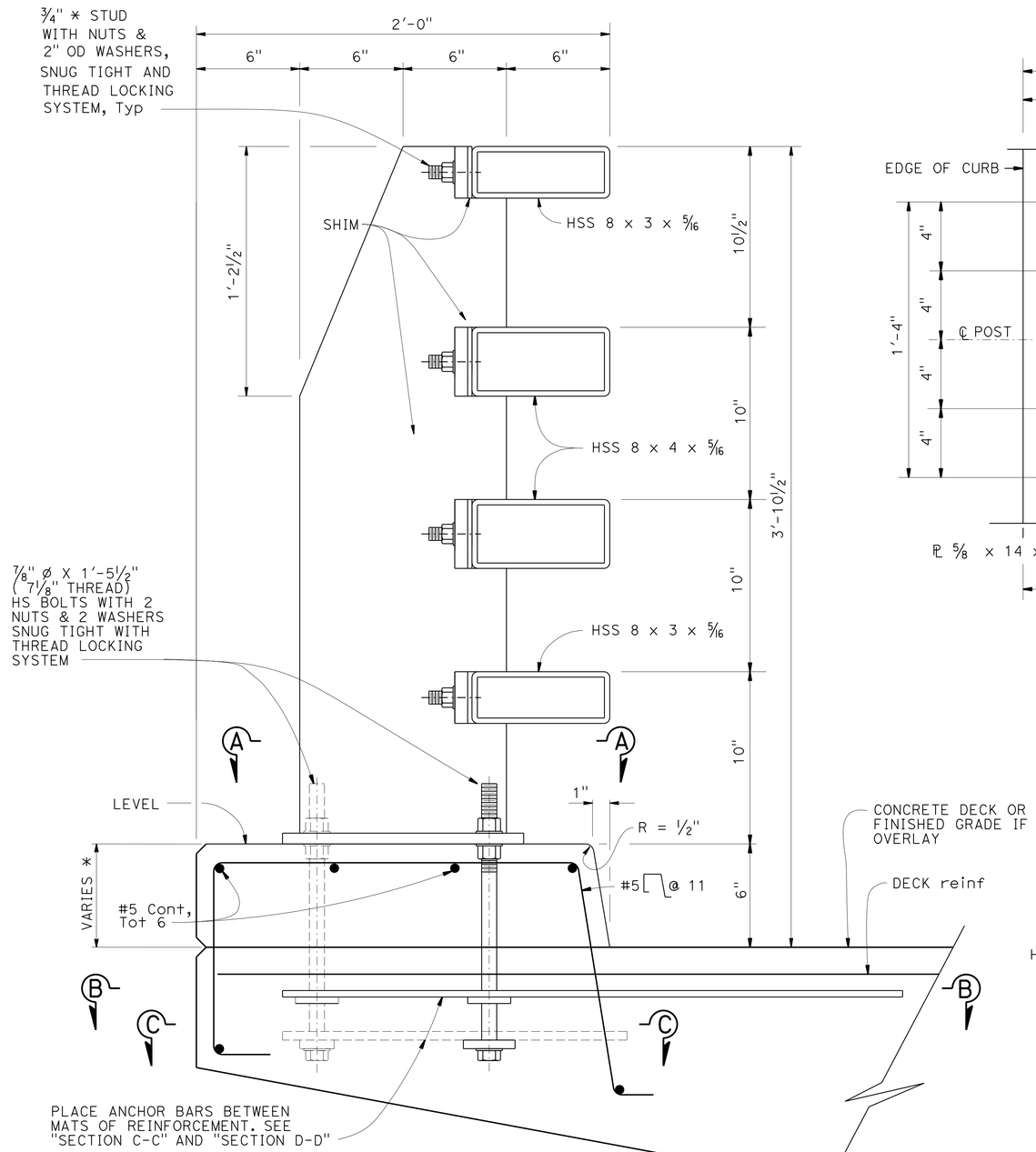

⁎ DIMENSION VARIES WITH ROADWAY CROSS SLOPE AND WITH THICKNESS OF OVERLAY IF APPLICABLE.

TYPICAL SECTION
3" = 1'-0"

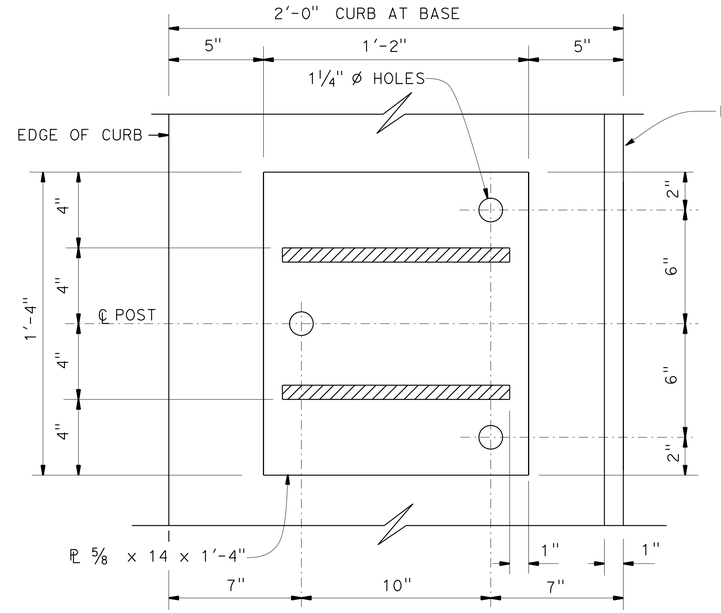

SECTION A-A
3' = 1'-0"

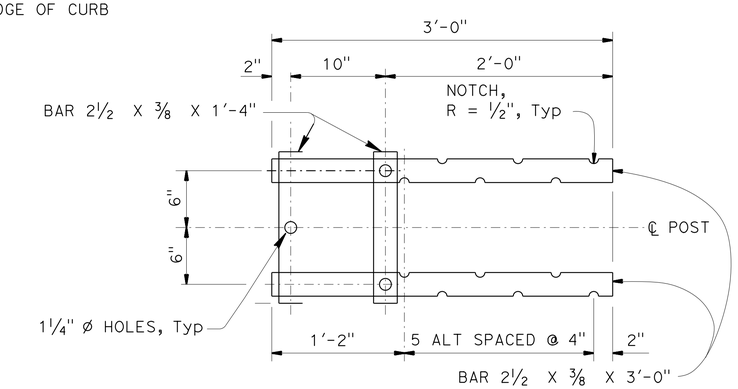

SECTION B-B
1½" = 1'-0"

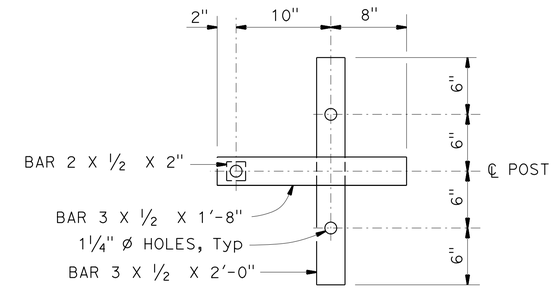

SECTION C-C
1½" = 1'-0"

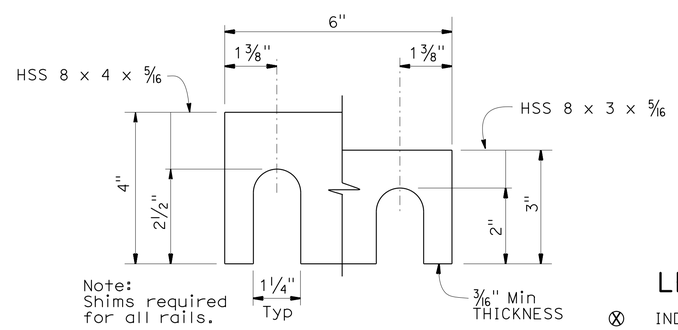

Note: Shims required for all rails.

SHIM DETAIL
6" = 1'-0"

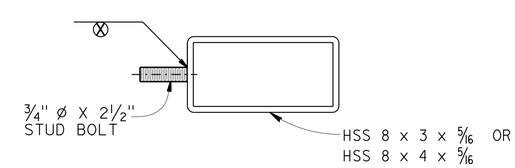

SECTION AT POST
3" = 1'-0"

LEGEND:

⊗ INDICATES STUD WELD

STANDARD DRAWING		
FILE NO. xs16-130-1	APPROVAL DATE January 2015	"The components of this Bridge Standard Drawing have been prepared under the responsible charge of the Technical Owner, a registered civil engineer in the State of California. Refer to: http://www.dot.ca.gov/hq/esc/techpubs/manual/bridgemanuals/bridge-standard-detail-sheet/index.html. The selection and proper application of the component design and any modifications shown have been prepared under the responsible charge of the registered civil engineer for the project."

STATE OF CALIFORNIA DEPARTMENT OF TRANSPORTATION

DIVISION OF ENGINEERING SERVICES 3

BRIDGE NO. 02-0081
POST MILE 88.3

BEAVER CREEK BRIDGE (WIDEN)
CALIFORNIA ST-70 BRIDGE RAIL
DETAILS No. 1

DS OSD 2147A (ENGLISH STANDARD DRAWING "XS" BORDER REV. (02-02-11)

ORIGINAL SCALE IN INCHES FOR REDUCED PLANS 0 1 2 3

UNIT: 3578
PROJECT NUMBER & PHASE: 02120000121
CONTRACT NO.: 02-4E6504

DISREGARD PRINTS BEARING EARLIER REVISION DATES → REVISION DATES 6-14-14 12-19-14 1-14-15

SHEET 29 OF 34

FILE => 02-0081-x-brdt01.dgn

USERNAME => s115152 DATE PLOTTED => 23-AUG-2016 TIME PLOTTED => 06:22

DIST	COUNTY	ROUTE	POST MILES TOTAL PROJECT	SHEET No.	TOTAL SHEETS
02	Sis	96	R52.5/88.4	204	208

Mufeed Khalaf 5-27-16
REGISTERED CIVIL ENGINEER DATE

06-15-16
PLANS APPROVAL DATE

REGISTERED PROFESSIONAL ENGINEER
Mufeed Khalaf
No. 54260
Exp. 12-31-17
CIVIL
STATE OF CALIFORNIA

The State of California or its officers or agents shall not be responsible for the accuracy or completeness of electronic copies of this plan sheet.

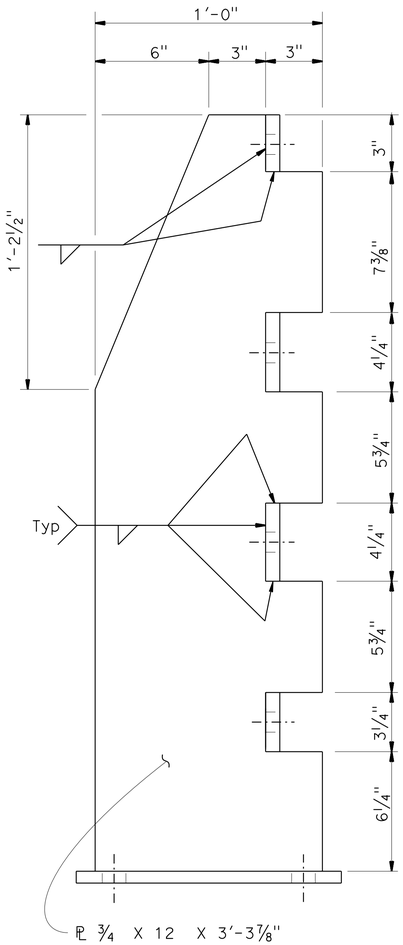

SECTION D-D

3" = 1'-0"

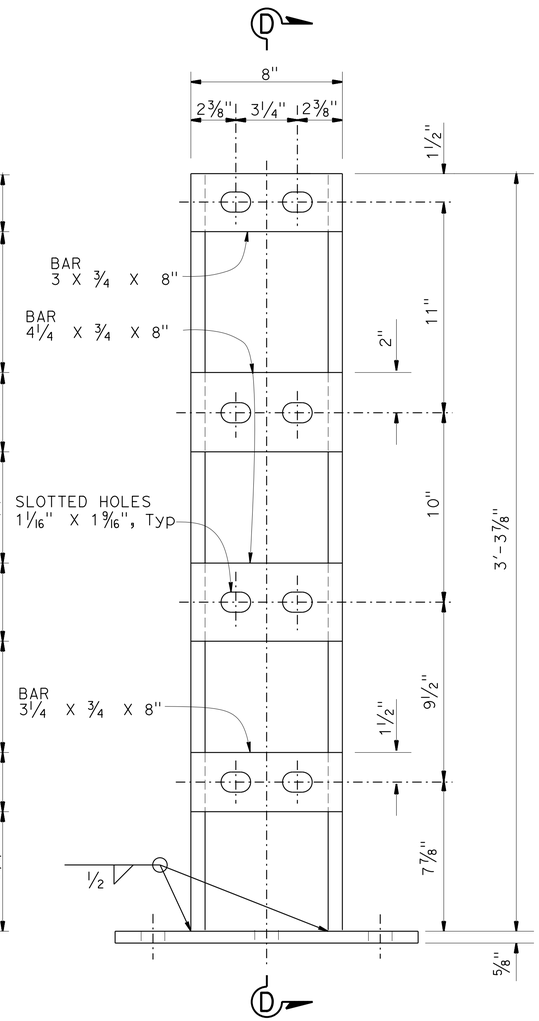

ELEVATION

3" = 1'-0"

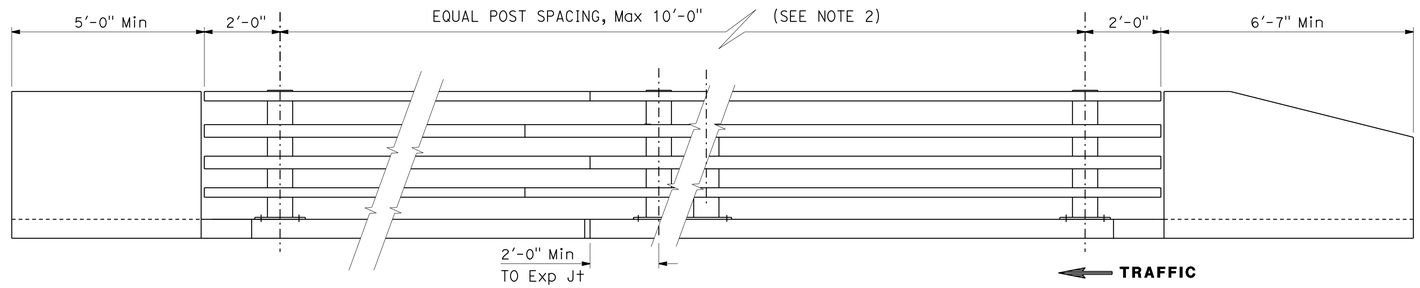

ELEVATION

½" = 1'-0"

NOTES:

1. For approach and departure end details, see "DETAILS No. 3" sheet.
2. Post spacing and/or block length to be adjusted to fit bridge length or wingwall length.
3. All horizontal members are parallel to longitudinal profile grade of deck.
4. Posts are normal to profile grade of structure.
5. Posts are vertical to the transverse cross section.

STANDARD DRAWING

FILE NO. xs16-130-2

APPROVAL DATE January 2015

"The components of this Bridge Standard Drawing have been prepared under the responsible charge of the Technical Owner, a registered civil engineer in the State of California. Refer to: http://www.dot.ca.gov/hq/esc/techpubs/manual/bridgemanuals/bridge-standard-detail-sheet/index.html. The selection and proper application of the component design and any modifications shown have been prepared under the responsible charge of the registered civil engineer for the project."

STATE OF CALIFORNIA
DEPARTMENT OF TRANSPORTATION

DIVISION OF ENGINEERING SERVICES 3

BRIDGE NO. 02-0081
POST MILE 88.3

BEAVER CREEK BRIDGE (WIDEN)
CALIFORNIA ST-70 BRIDGE RAIL
DETAILS No. 2

DS OSD 2147A (ENGLISH STANDARD DRAWING "XS" BORDER REV. (02-02-11)

ORIGINAL SCALE IN INCHES FOR REDUCED PLANS 0 1 2 3

UNIT:
PROJECT NUMBER & PHASE: 02120000121
CONTRACT NO.: 02-4E6504

DISREGARD PRINTS BEARING EARLIER REVISION DATES

REVISION DATES: 6-14-14 12-19-14 1-14-15

SHEET 30 OF 34

FILE => 02-0081-x-brdt02.dgn

USERNAME => s115152 DATE PLOTTED => 23-AUG-2016 TIME PLOTTED => 06:22

DIST	COUNTY	ROUTE	POST MILES TOTAL PROJECT	SHEET No.	TOTAL SHEETS
02	Sis	96	R52.5/88.4	205	208

Mufeed Khalaf 5-27-16
REGISTERED CIVIL ENGINEER DATE

06-15-16
PLANS APPROVAL DATE

REGISTERED PROFESSIONAL ENGINEER Mufeed Khalaf No. 54260 Exp. 12-31-17 CIVIL STATE OF CALIFORNIA

The State of California or its officers or agents shall not be responsible for the accuracy or completeness of electronic copies of this plan sheet.

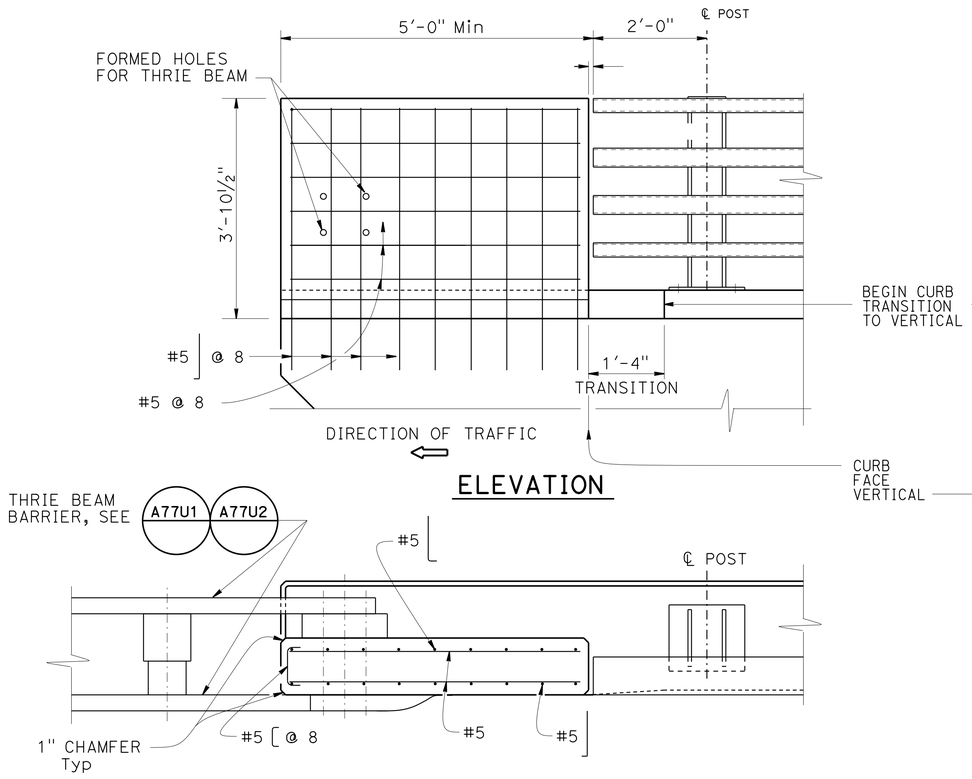

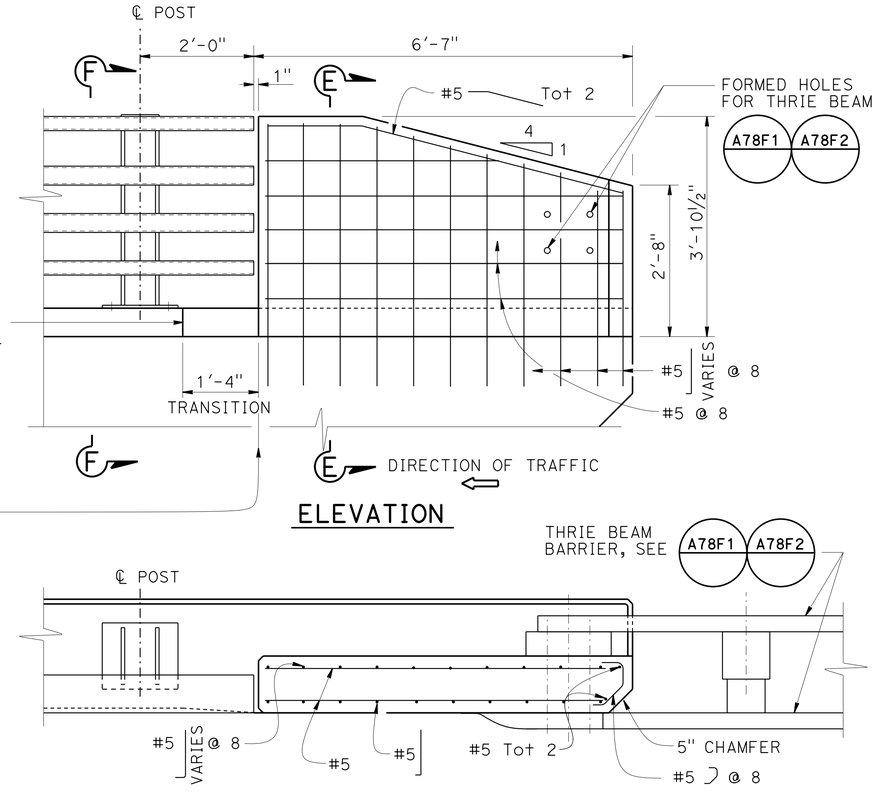

NOTES:

1. Anchor bolts may be tack welded (shop or field) to anchorage.
2. Each rail length must be continuous over a minimum of two posts.
3. The fabricator must check that the tubular sleeve splices conform to the dimensions indicated to assure proper clearance.
4. Except for expansion splices, not more than one splice permitted per same side of post.

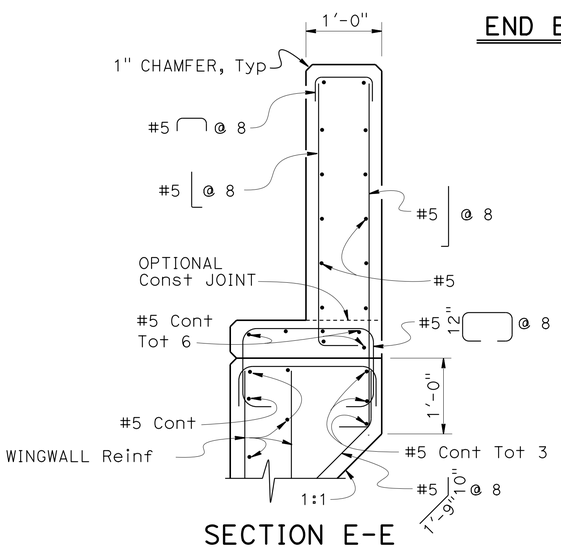

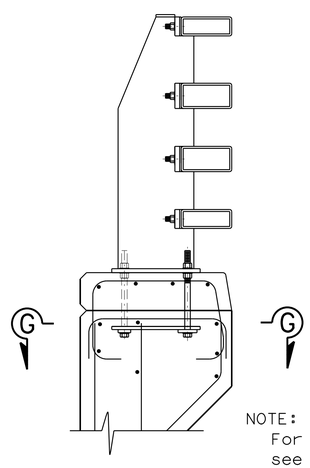

NOTE:
For details not shown, see "SECTION E-E"

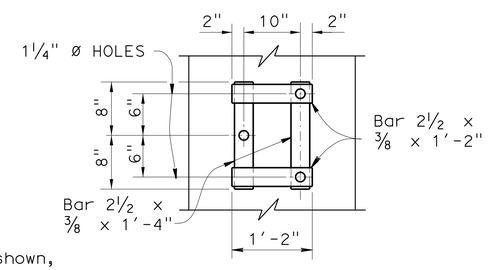

STANDARD DRAWING					
FILE NO. xs16-130-3	APPROVAL DATE January 2015	"The components of this Bridge Standard Drawing have been prepared under the responsible charge of the Technical Owner, a registered civil engineer in the State of California. Refer to: http//www.dot.ca.gov/hq/esc/techpubs/manual/bridgemanuals/bridge-standard-detail-sheet/index.html. The selection and proper application of the component design and any modifications shown have been prepared under the responsible charge of the registered civil engineer for the project."	STATE OF CALIFORNIA DEPARTMENT OF TRANSPORTATION	DIVISION OF ENGINEERING SERVICES 3	BRIDGE NO. 02-0081 POST MILE 88.3

BEAVER CREEK BRIDGE (WIDEN)
CALIFORNIA ST-70 BRIDGE RAIL
DETAILS No. 3

DS OSD 2147A (ENGLISH STANDARD DRAWING "XS" BORDER REV. (02-02-11)

ORIGINAL SCALE IN INCHES FOR REDUCED PLANS 0 1 2 3

UNIT: 3578
PROJECT NUMBER & PHASE: 02120000121
CONTRACT NO.: 02-4E6504

DISREGARD PRINTS BEARING EARLIER REVISION DATES

REVISION DATES: 6-14-14 12-19-14 1-14-15

SHEET 31 OF 34

FILE => 02-0081-x-brdt03.dgn

USERNAME => s115152 DATE PLOTTED => 23-AUG-2016 TIME PLOTTED => 06:22

DIST	COUNTY	ROUTE	POST MILES TOTAL PROJECT	SHEET No.	TOTAL SHEETS
02	Sis	96	R52.5/88.4	206	208

Mufeed Khalaf 5-27-16
REGISTERED CIVIL ENGINEER DATE

06-15-16
PLANS APPROVAL DATE

REGISTERED PROFESSIONAL ENGINEER
Mufeed Khalaf
No. 54260
Exp. 12-31-17
CIVIL
STATE OF CALIFORNIA

The State of California or its officers or agents shall not be responsible for the accuracy or completeness of electronic copies of this plan sheet.

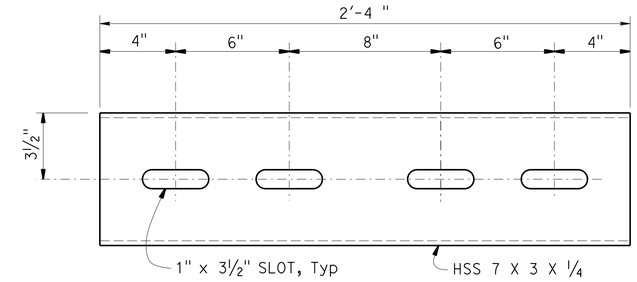

(FOR HSS 8 X 4 X 5/16 RAIL)

STANDARD SLEEVE DETAIL

3" = 1'-0"

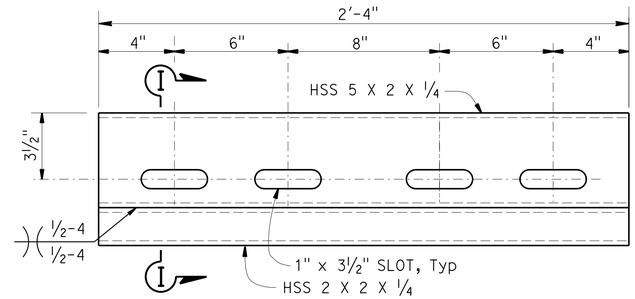

(FOR HSS 8 X 3 X 5/16 RAIL)

STANDARD SLEEVE DETAIL

3" = 1'-0"

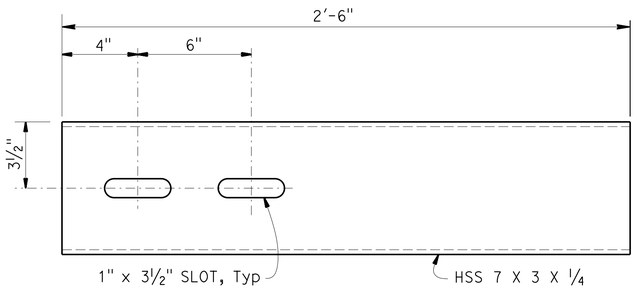

(FOR HSS 8 X 4 X 5/16 RAIL)

EXPANSION SLEEVE DETAIL

3" = 1'-0"

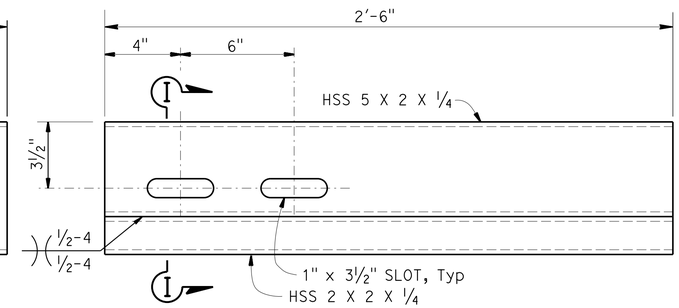

(FOR HSS 8 X 3 X 5/16 RAIL)

EXPANSION SLEEVE DETAIL

3" = 1'-0"

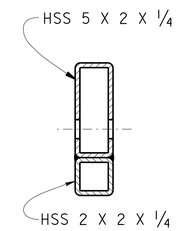

SECTION I-I

3" = 1'-0"

NOTES:

1. HS bolts with nut and washers, snug tightened, and thread locking system.
2. Use ¾"Ø X 4 5/16 (HSS 8 X 3 X 5/16)
   Use ¾"Ø X 5 5/16 (HSS 8 X 4 X 5/16)

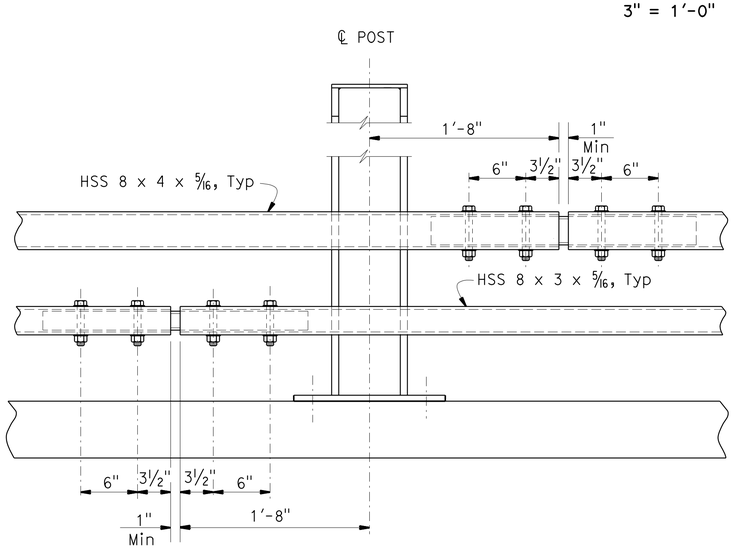

STANDARD SPLICE

1½" = 1'-0"

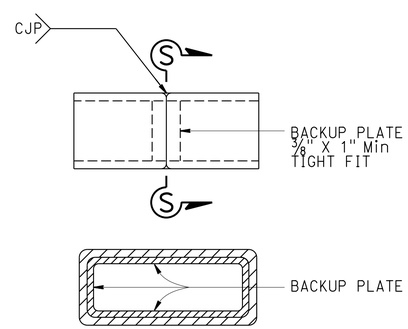

SECTION S-S

ALTERNATE TUBE WELDED SPLICE

1½" = 1'-0"

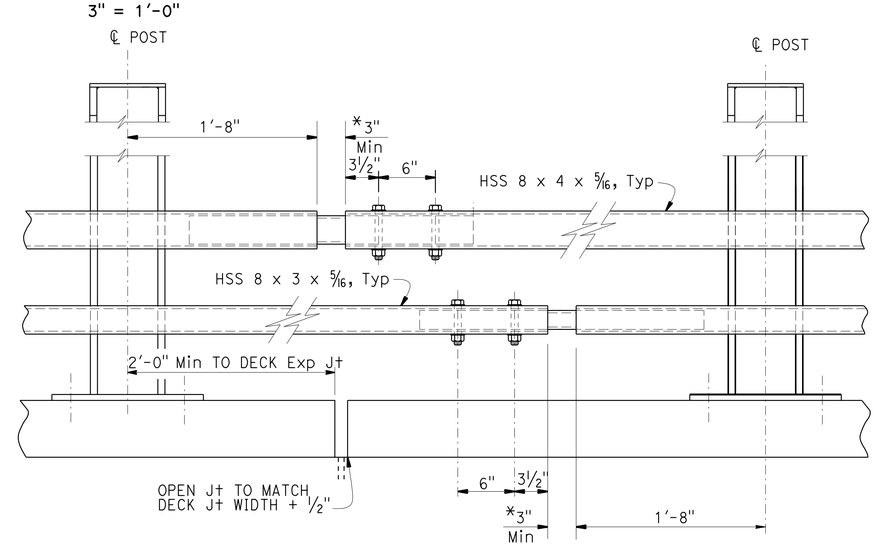

EXPANSION SPLICE

1½" = 1'-0"
* MATCH DECK OR WALL JOINT

STANDARD DRAWING

FILE NO. xs16-130-4

APPROVAL DATE January 2015

"The components of this Bridge Standard Drawing have been prepared under the responsible charge of the Technical Owner, a registered civil engineer in the State of California. Refer to: http://www.dot.ca.gov/hq/esc/techpubs/manual/bridgemanuals/bridge-standard-detail-sheet/index.html. The selection and proper application of the component design and any modifications shown have been prepared under the responsible charge of the registered civil engineer for the project."

STATE OF CALIFORNIA
DEPARTMENT OF TRANSPORTATION

DIVISION OF ENGINEERING SERVICES 3

BRIDGE NO. 02-0081
POST MILE 88.3

BEAVER CREEK BRIDGE (WIDEN)
CALIFORNIA ST-70 BRIDGE RAIL
DETAILS No. 4

DS OSD 2147A (ENGLISH STANDARD DRAWING "XS" BORDER REV. (02-02-11)

ORIGINAL SCALE IN INCHES FOR REDUCED PLANS 0 1 2 3

UNIT: 3578
PROJECT NUMBER & PHASE: 02120000121
CONTRACT NO.: 02-4E6504

DISREGARD PRINTS BEARING EARLIER REVISION DATES

REVISION DATES 6-14-14 12-18-14 1-14-15

SHEET 32 OF 34

FILE => 02-0081-x-brdt04.dgn

USERNAME => s115152 DATE PLOTTED => 23-AUG-2016 TIME PLOTTED => 06:22

DIST	COUNTY	ROUTE	POST MILES TOTAL PROJECT	SHEET No	TOTAL SHEETS
02	Sis	96	R52.5/88.4	207	208

PROFESSIONAL GEOLOGIST 2-3-16

PLANS APPROVAL DATE 06-15-16

PROFESSIONAL GEOLOGIST Timothy Alan Alderman No. 9302 Exp. 9-30-17 STATE OF CALIFORNIA

The State of California or its officers or agents shall not be responsible for the accuracy or completeness of electronic copies of this plan sheet.

This LOTB sheet was prepared in accordance with the Caltrans Soil & Rock Logging, Classification, & Presentation Manual (2010 Edition).

See 2010 Standard Plans A10F and A10G for Soil Legend, and A10H for Rock Legend.

BENCH MARK

CM 88.25 Elev 1775.25

Fnd ¾" REBAR w/ ALUM CAP
28.51' Lt. "B" LINE ℄ Rte 96
Sta. 11+75.78
N 2,565,682.08
E 6,338,997.57
NAVD88

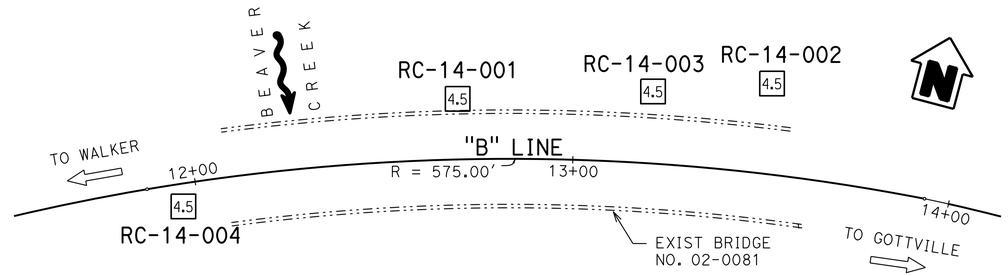

PLAN

1" = 20'

Notes: 1. Groundwater was not encountered in Boring RC-14-003.
2. Groundwater was encountered in Boring RC-14-004 but elevation was not measured.

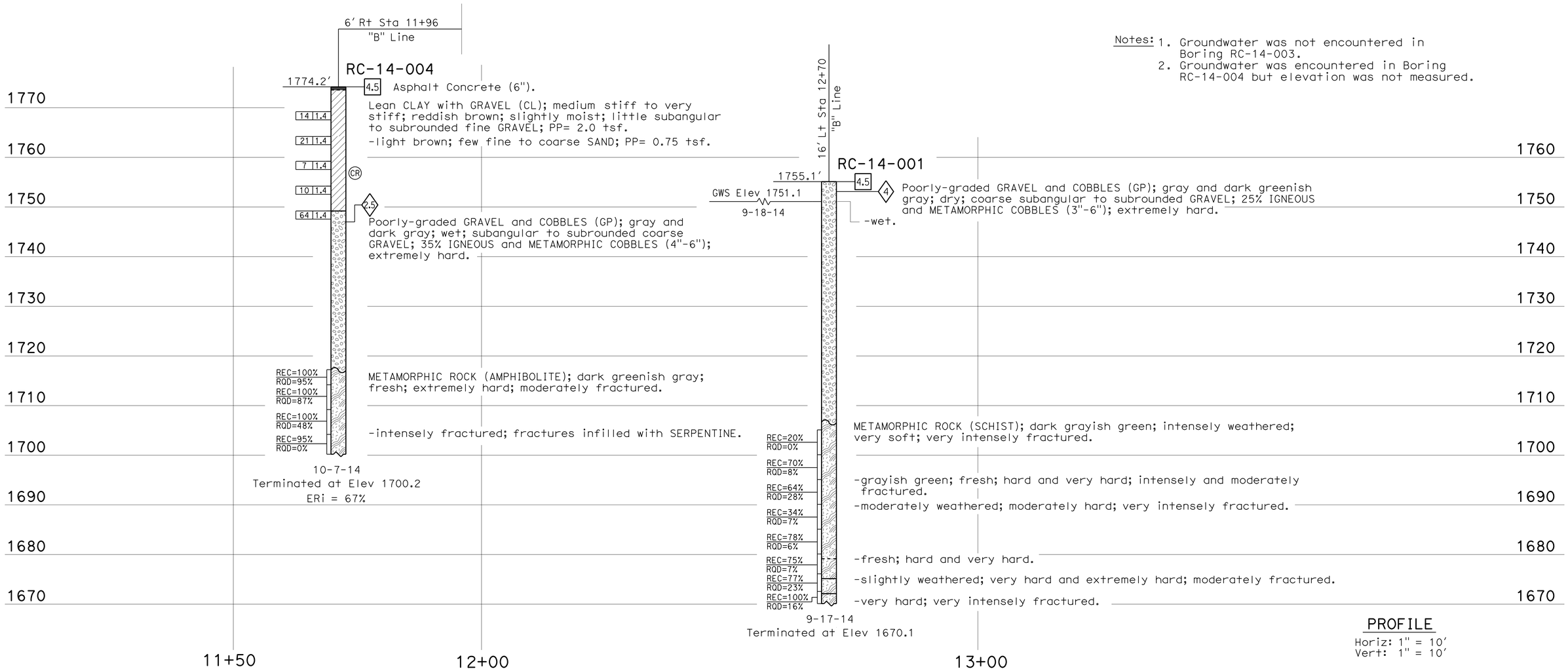

PROFILE

Horiz: 1" = 10'
Vert: 1" = 10'

ENGINEERING SERVICES	MATERIALS AND GEOTECHNICAL SERVICES	STATE OF CALIFORNIA DEPARTMENT OF TRANSPORTATION	DIVISION OF ENGINEERING SERVICES STRUCTURE DESIGN DESIGN BRANCH 3	BRIDGE NO. 02-0081 POST MILE 88.3	BEAVER CREEK BRIDGE (WIDEN)
FUNCTIONAL SUPERVISOR NAME: A. Perez-Cobo	DRAWN BY: I. G-Remmen CHECKED BY: A. Barrie	FIELD INVESTIGATION BY: T. Alderman			LOG OF TEST BORINGS 1 OF 2

OGS CIVIL LOG OF TEST BORINGS SHEET

ORIGINAL SCALE IN INCHES FOR REDUCED PLANS 0 1 2 3

UNIT: 3650
PROJECT NUMBER & PHASE: 02120000121 CONTRACT NO.: 02-4E6504

DISREGARD PRINTS BEARING EARLIER REVISION DATES → REVISION DATES 11-20-15 01-26-16 02-03-16

SHEET 33 OF 34

FILE => 02-0081-y-lltb01.dgn

USERNAME => s115152 DATE PLOTTED => 23-AUG-2016 TIME PLOTTED => 06:22

DIST	COUNTY	ROUTE	POST MILES TOTAL PROJECT	SHEET No	TOTAL SHEETS
02	Sis	96	R52.5/88.4	208	208

PROFESSIONAL GEOLOGIST 2-3-16

PROFESSIONAL GEOLOGIST Timothy Alan Alderman No. 9302 Exp. 9-30-17 STATE OF CALIFORNIA

06-15-16
PLANS APPROVAL DATE

The State of California or its officers or agents shall not be responsible for the accuracy or completeness of electronic copies of this plan sheet.

This LOTB sheet was prepared in accordance with the Caltrans Soil & Rock Logging, Classification, & Presentation Manual (2010 Edition).

See 2010 Standard Plans A10F and A10G for Soil Legend, and A10H for Rock Legend.

FOR PLAN VIEW, SEE
"LOG OF TEST BORINGS 1 OF 2"

Note: Groundwater was not encountered in Boring RC-14-003.

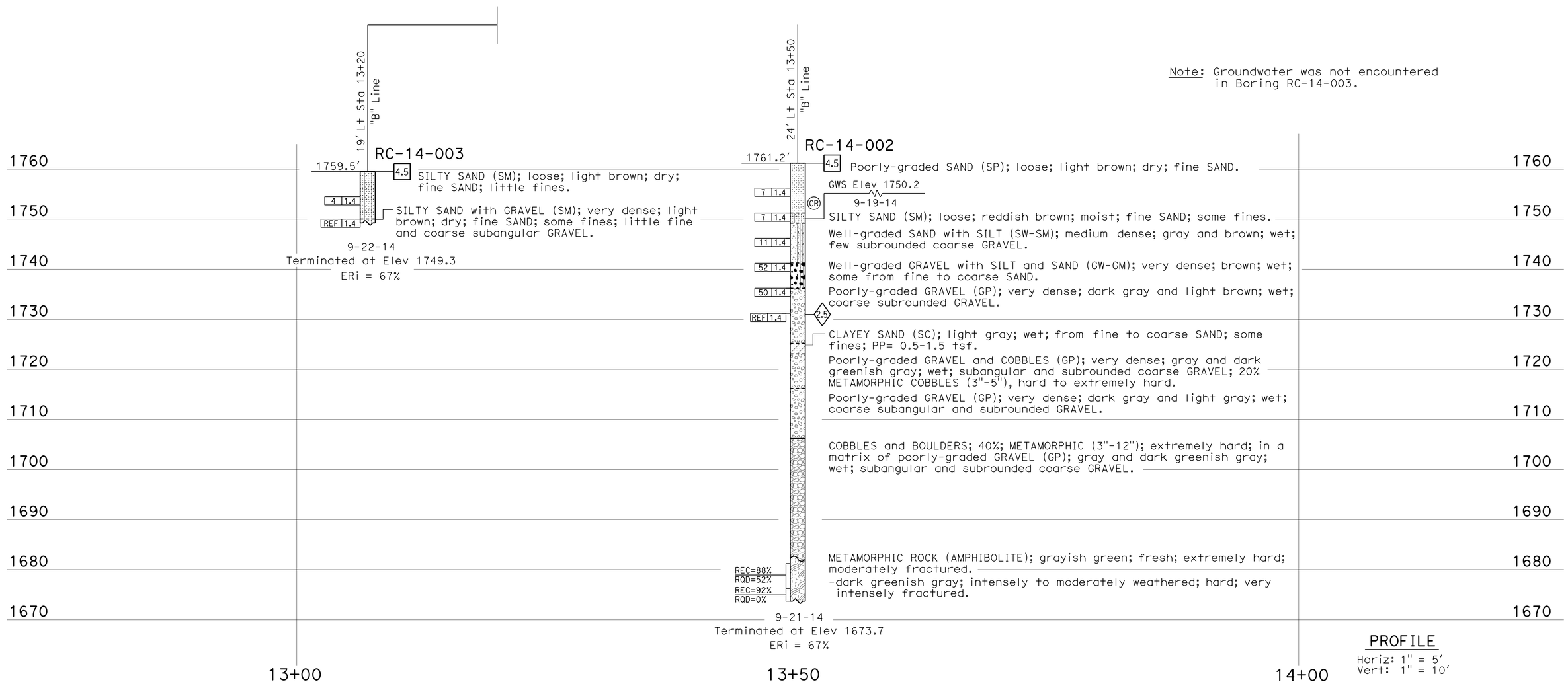

PROFILE
Horiz: 1" = 5'
Vert: 1" = 10'

ENGINEERING SERVICES	MATERIALS AND GEOTECHNICAL SERVICES	STATE OF CALIFORNIA DEPARTMENT OF TRANSPORTATION	DIVISION OF ENGINEERING SERVICES STRUCTURE DESIGN DESIGN BRANCH 3	BRIDGE NO. 02-0081 POST MILE 88.3	BEAVER CREEK BRIDGE (WIDEN)
FUNCTIONAL SUPERVISOR NAME: A. Perez-Cobo	DRAWN BY: I. G-Remmen CHECKED BY: A. Barrie	FIELD INVESTIGATION BY: T. Alderman			LOG OF TEST BORINGS 2 OF 2

OGS CIVIL LOG OF TEST BORINGS SHEET

ORIGINAL SCALE IN INCHES FOR REDUCED PLANS 0 1 2 3

UNIT: 3650
PROJECT NUMBER & PHASE: 02120000121 CONTRACT NO.: 02-4E6504

DISREGARD PRINTS BEARING EARLIER REVISION DATES

REVISION DATES 11-20-15 01-26-16 02-03-16

SHEET 34 OF 34

FILE => 02-0081-y-lltb02.dgn

USERNAME => s115152 DATE PLOTTED => 23-AUG-2016 TIME PLOTTED => 06:22